L-force catalogue

Automation systems
Drive solutions

Controls
Inverter
Motors
Gearboxes
Engineering Tools

Motors: IE3 three-phase AC motors m540/m550-P, IE1 MD three-phase AC motors

Gearboxes: g500-H helical gearboxes, g500-S shaft-mounted helical gearbox, g500-B bevel gearbox

Lenze
As easy as that.

Contents of the L-force catalogue

About Lenze		Lenze makes many things easy for you.	
		A matter of principle: the right products for every application.	
		L-force product portfolio	
Automation systems		Controller-based Automation	1.1
		Drive-based automation	1.2
Drive solutions		HighLine tasks	2.1
		StateLine tasks	2.2
		BaseLine tasks	2.3
Controls	Visualisation	Panel PC v800	3.1
		Monitor v200	3.2
	Cabinet Controllers	Controller 3200 C	3.3
		Controller c300	3.4
	Panel Controllers	Controller p500	3.5
		Controller p300	3.6
	'	I/O System 1000	3.7
Inverter	Decentralised	Inverter Drives 8400 protec	4.1
		Inverter Drives 8400 motec	4.2
	Cabinet	Servo Drives 9400 HighLine	4.3
		Inverter Drives 8400 TopLine	4.4
		Servo-Inverter i700	4.5
		Inverter Drives 8400 HighLine	4.6
		Inverter Drives 8400 StateLine	4.7
		Inverter Drives 8400 BaseLine	4.8
Motors	Servo motors	MCS synchronous servo motors	5.1
		MCM synchronous servo motors	5.2
		MD□KS synchronous servo motors	5.3
		MQA asynchronous servo motors	5.4
		MCA asynchronous servo motors	5.5
	Three-phase AC motors	IE3 three-phase AC motors m540/m550-P	5.6
		Inverter opt. three-phase AC motors MF	5.7
		IE2 MH three-phase AC motors	5.8
		IE1 MD three-phase AC motors	5.9
		Lenze Smart Motor m300	5.10
		IE3 three-phase AC motors m240-P	5.11
		IE1/2 three-phase AC motors Basic MD/MH	5.12
Gearboxes	Axial gearboxes	g700-P planetary gearbox	6.1
		MPR/MPG planetary gearboxes	6.2
		g500-H helical gearboxes	6.3
		g500-S shaft-mounted helical gearbox	6.4
	Right-angle gearboxes	g500-B bevel gearbox	6.5
	Motor data	Assignment see above	6.6
Engineering Tools		Navigator	7.1
		Drive Solution Designer	7.2
		Drive Solution Catalogue	7.3
		Engineer	7.4
		PLC Designer	7.5
		VisiWinNET®	7.6
		EASY Starter	7.7

Selected portfolio

Additional portfolio

Lenze makes many things easy for you.

With our motivated and committed approach, we work together with you to create the best possible solution and set your ideas in motion - whether you are looking to optimise an existing machine or develop a new one. We always strive to make things easy and seek perfection therein. This is anchored in our thinking, in our services and in every detail of our products. It's as easy as that!

1

Developing ideas

Are you looking to build the best machine possible and already have some initial ideas? Then get these down on paper together with us, starting with small innovative details and stretching all the way to completely new machines. Working together, we will develop an intelligent and sustainable concept that is perfectly aligned with your specific requirements.

2

Drafting concepts

We see welcome challenges in your machine tasks, supporting you with our comprehensive expertise and providing valuable impetus for your innovations. We take a holistic view of the individual motion and control functions here and draw up consistent, end-to-end drive and automation solutions for you - keeping everything as easy as possible and as extensive as necessary.

3

Implementing solutions

Our easy formula for satisfied customers is to establish an active partnership with fast decision making processes and an individually tailored offer. We have been using this principle to meet the ever more specialised customer requirements in the field of machine engineering for many years.

4

Manufacturing machines

Functional diversity in perfect harmony: as one of the few full-range providers in the market, we can provide you with precisely those products that you actually need for any machine task – no more and no less. Our L-force product portfolio, a consistent platform for implementing drive and automation tasks, is invaluable in this regard.

5

Ensuring productivity

Productivity, reliability and new performance peaks on a daily basis – these are our key success factors for your machine. After delivery, we offer you cleverly devised service concepts to ensure continued safe operation. The primary focus here is on technical support, based on the excellent application expertise of our highly-skilled and knowledgeable after-sales team.

A matter of principle: the right products for every application.

Lenze's extensive L-force product portfolio follows a very simple principle. The functions of our finely scaled products are assigned to the three lines Base-Line, State-Line or High-Line.

But what does this mean for you? It allows you to quickly recognise which products represent the best solution for your own specific requirements.

Powerful products with a major impact:
- Easy handling
- High quality and durability
- Reliable technologies in tune with the latest developments

Lenze products undergo the most stringent testing in our own laboratory. This allows us to ensure that you will receive consistently high quality and a long service life. In addition to this, five logistics centres ensure that the Lenze products you select are available for quick delivery anywhere across the globe. It's as easy as that!

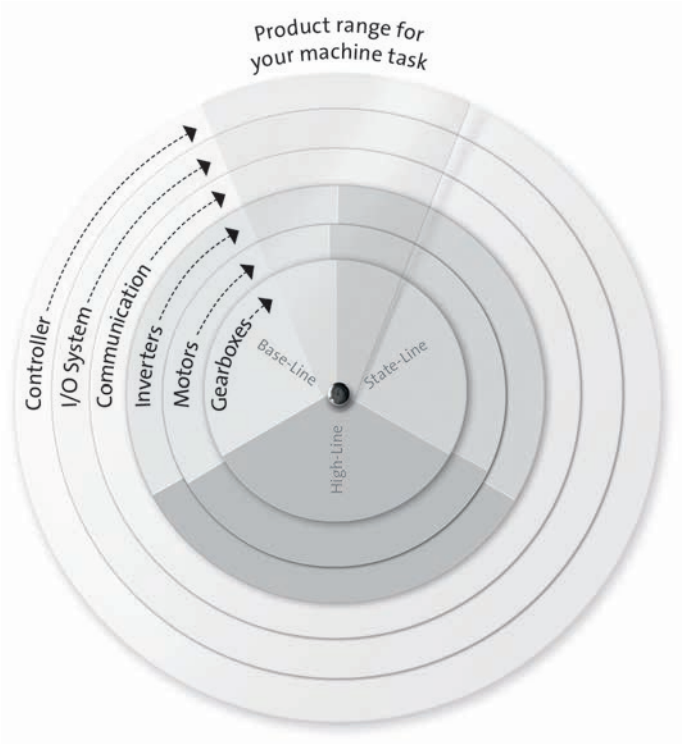

L-force product portfolio

Controls

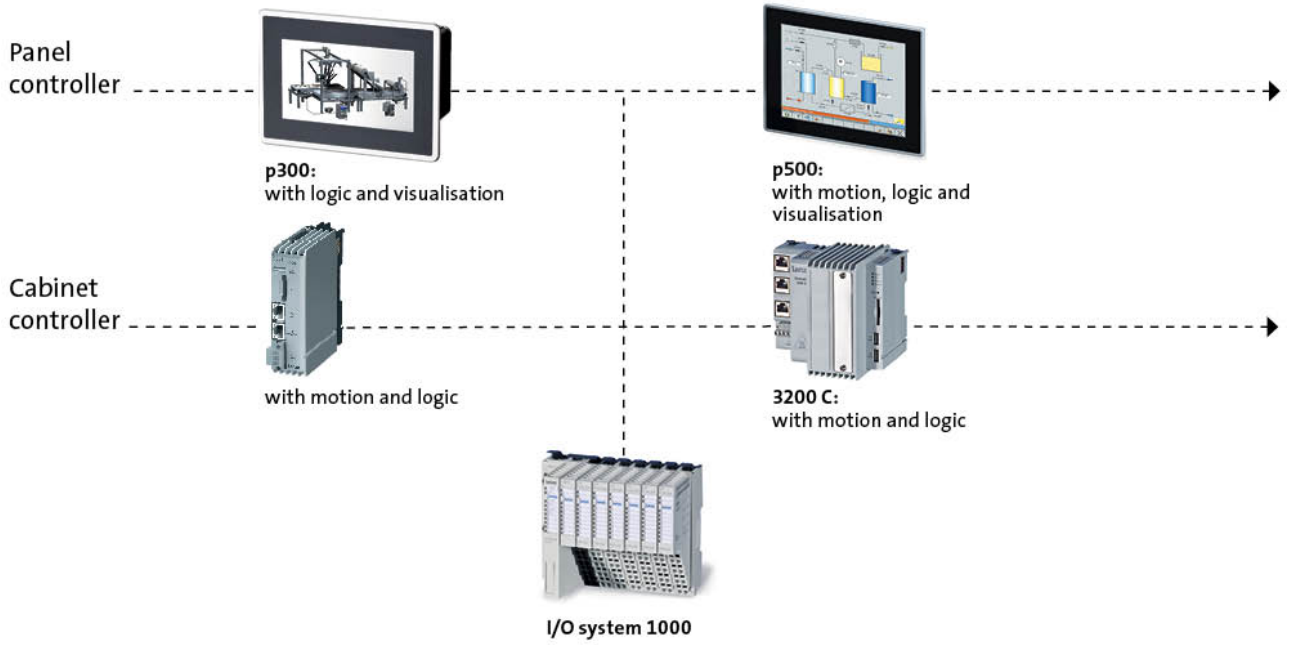

Engineering Tools

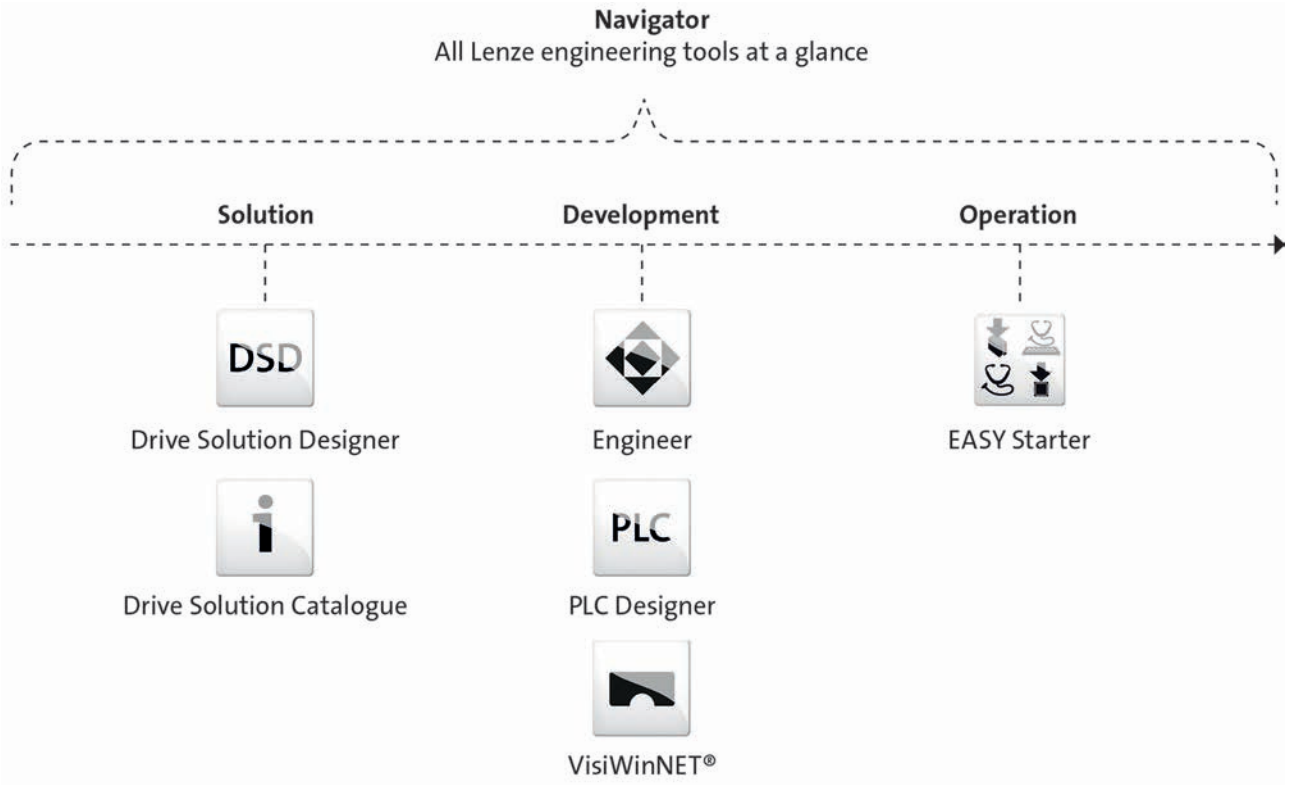

L-force product portfolio

Inverter

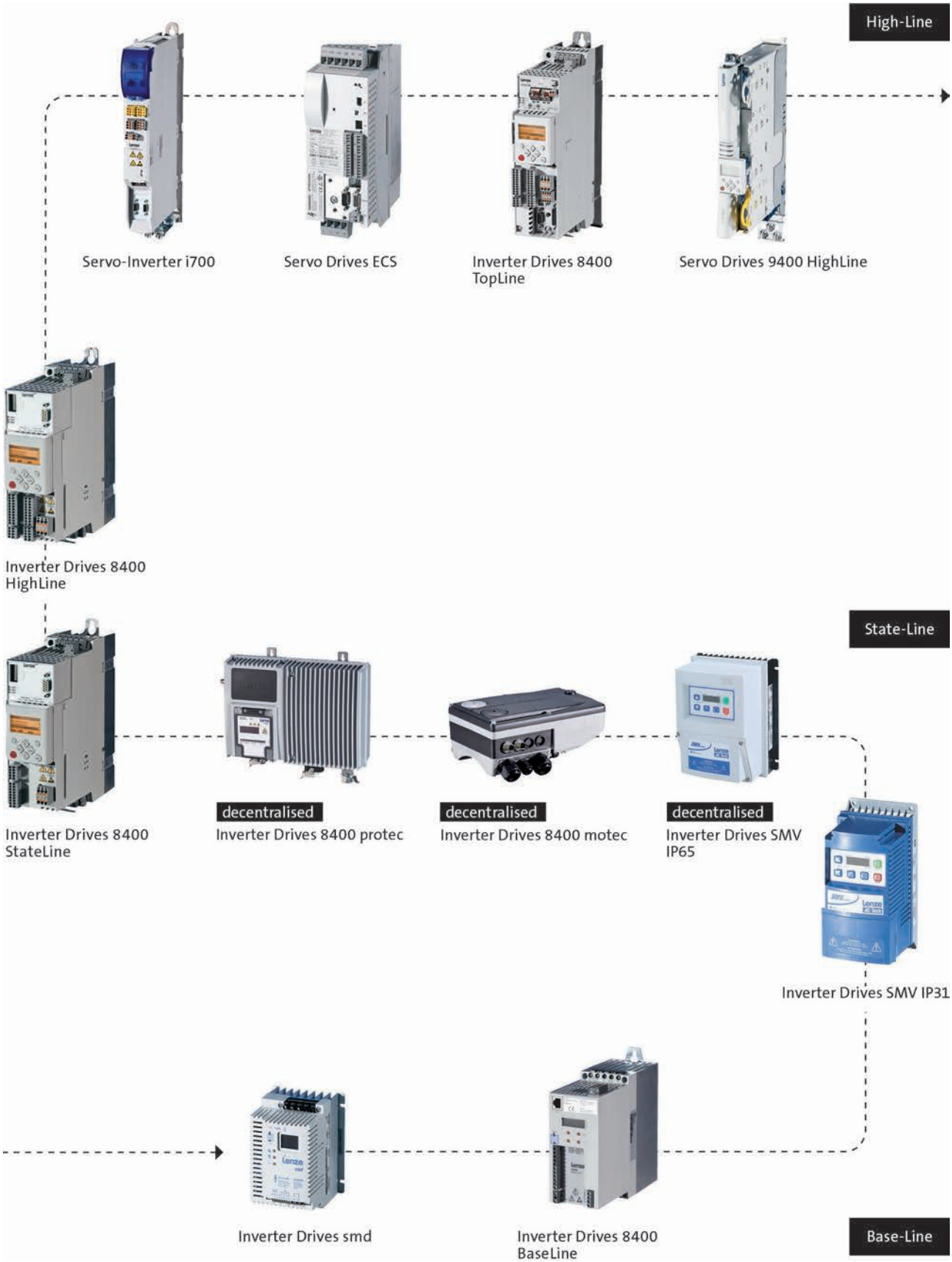

L-force product portfolio

Motors

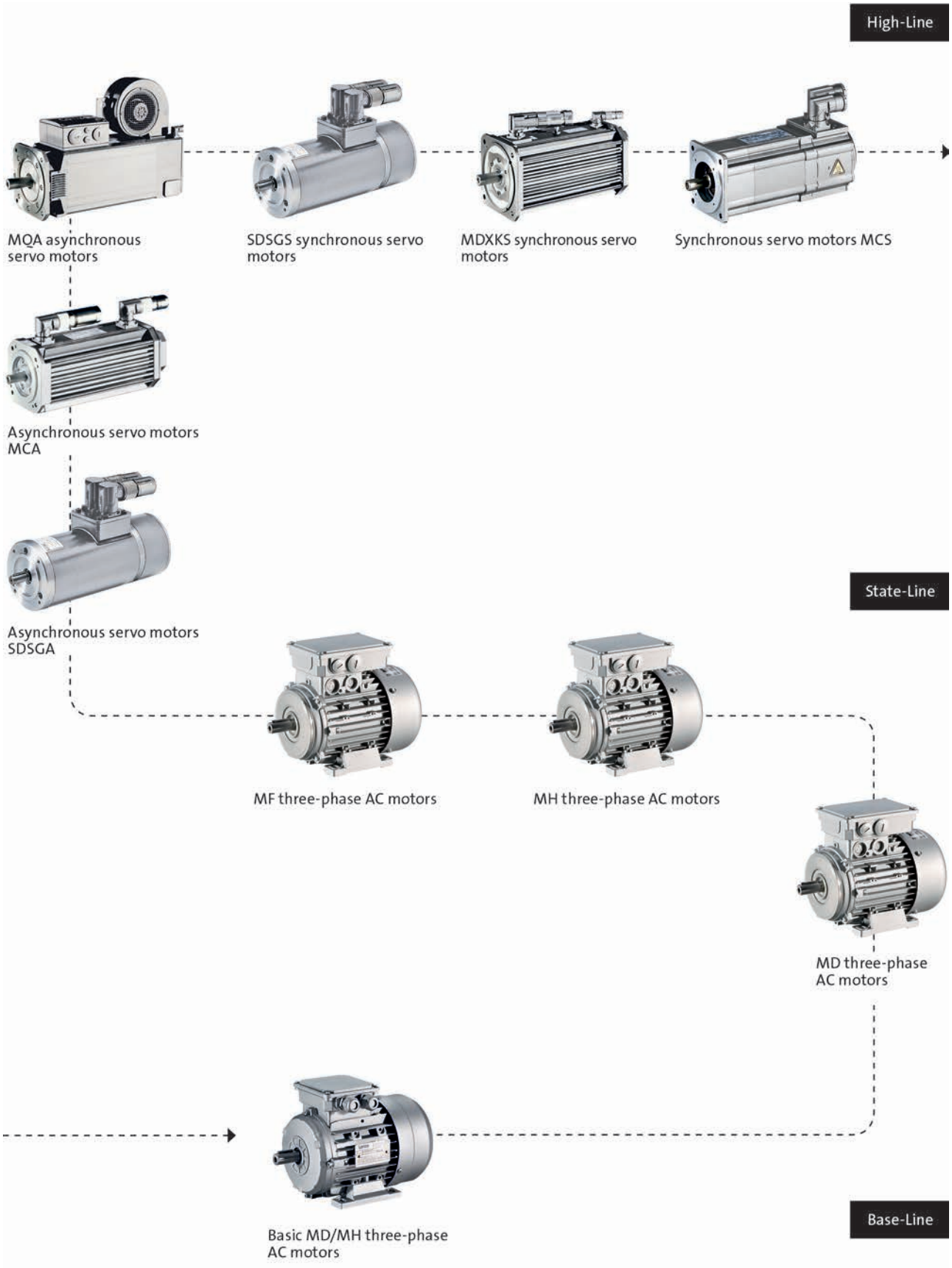

L-force product portfolio

Gearboxes

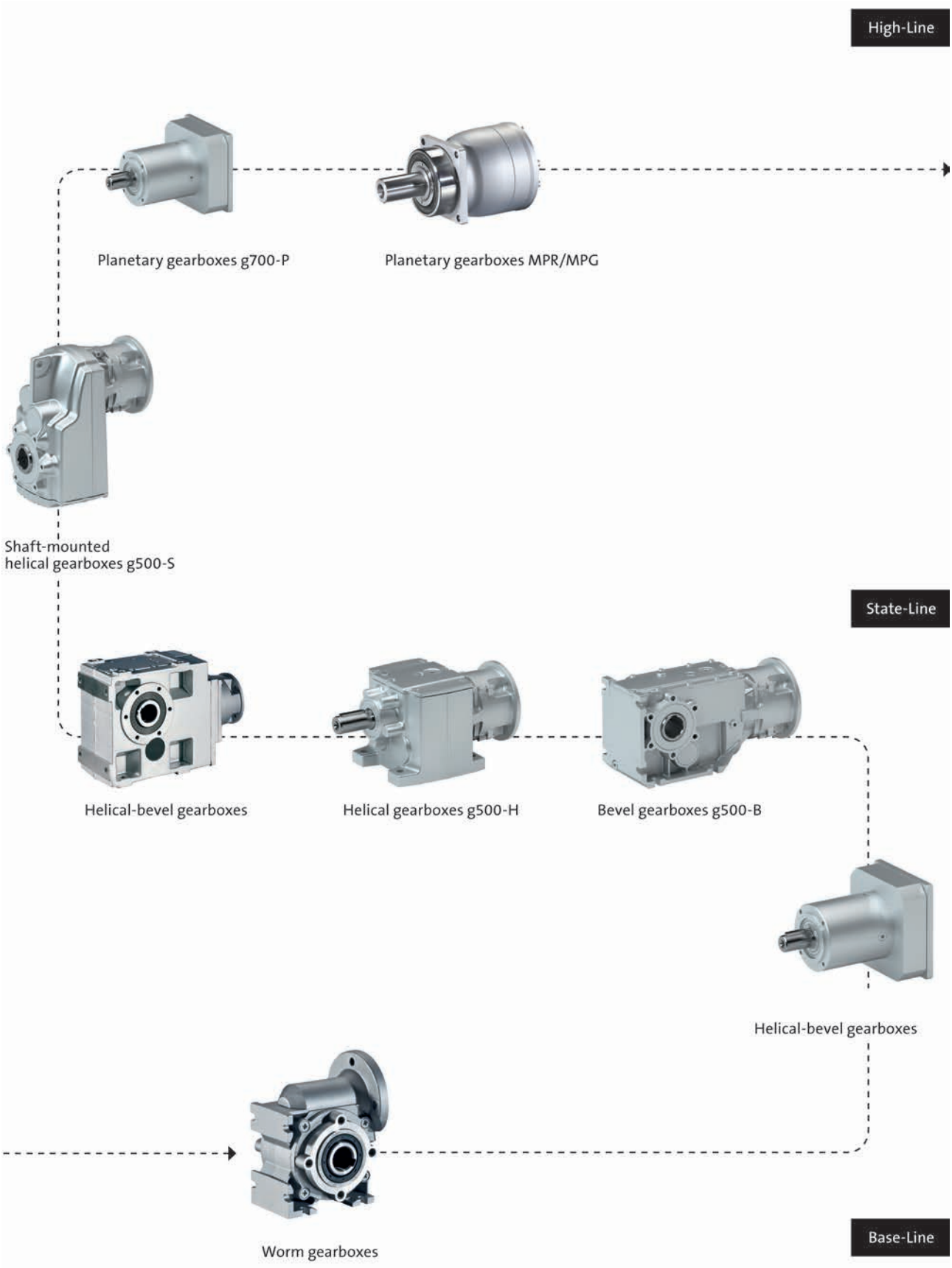

g500-H helical geared motors

Inverter operation
0.06 ... 0.55 kW (efficiency class IE1)
0.75 ... 55 kW (efficiency class IE3)

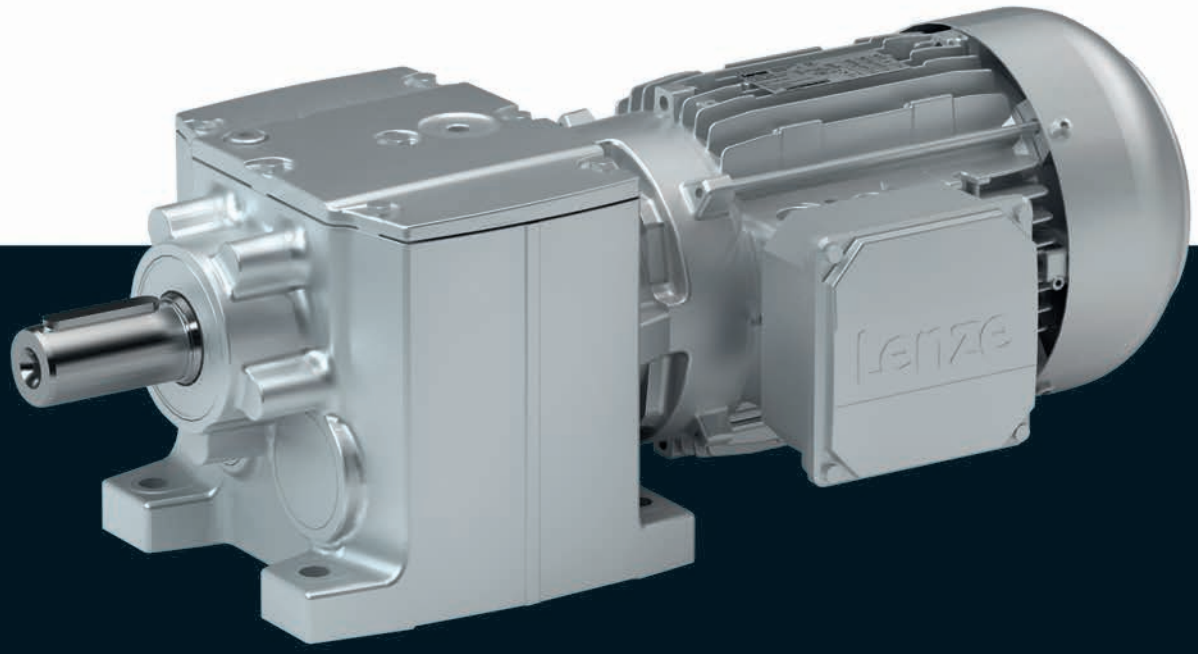

g500-H helical geared motors

Contents

General information	List of abbreviations	6.3 - 4
	Product information	6.3 - 6
	Equipment	6.3 - 7
	The geared motor kit	6.3 - 9
Project planning	General information about the data provided in this catalogue	6.3 - 15
	Procedure of a configuration process	6.3 - 16
	Standards	6.3 - 24
	Thermal power limit	6.3 - 27
	Load capacity and application factor	6.3 - 28
	Operational performance of three-phase AC geared motors	6.3 - 29
	Technical data at a glance	6.3 - 31
	Gearbox with mounting flange	6.3 - 54
	Surface and corrosion protection	6.3 - 59
	Lubricants	6.3 - 61
	Ventilation	6.3 - 62
Technical data	Standards and operating conditions	6.3 - 69
	Permissible radial and axial forces at output	6.3 - 70
	Selection tables, notes	6.3 - 74
	Selection tables, 4-pole motors	6.3 - 75
	Dimensions, notes	6.3 - 151
	Dimensions, 4-pole motors	6.3 - 152
	Additional length of the built-on accessories	6.3 - 233
	Weights, 4-pole motors	6.3 - 235
	Additional weights for gearboxes	6.3 - 239
	Additional weights for motors	6.3 - 239
Appendix	Gearbox code	6.3 - 241
	Motor code	6.3 - 242

List of abbreviations

α	[rad/s²]	Max. permissible angular acceleration
$\eta_{50\,\%}$	[%]	Efficiency
$\eta_{75\,\%}$	[%]	Efficiency
$\eta_{100\,\%}$	[%]	Efficiency
η_a		Efficiency
$\eta_{c=1}$		Efficiency
c		Load capacity
cos ϕ		Power factor
du/dt	[kV/µs]	Insulation resistance
$F_{ax,-}$	[N]	Min. axial force
$F_{ax,+}$	[N]	Max. axial force
$F_{ax,max}$	[N]	Max. axial force
$f_{in,max}$	[Hz]	Max. input frequency
f_{max}	[kHz]	Limit frequency
f_{max}	[kHz]	Max. switching frequency
f_N	[Hz]	Rated frequency
$F_{rad,max}$	[N]	Max. radial force
f_z		Additional radial force factor
H_{max}	[m]	Site altitude
I_0	[A]	Standstill current
i		Ratio
$I_{in,max}$	[A]	Max. input current
I_{max}	[A]	Max. current consumption
I_{max}	[A]	Max. current
I_{max}	[A]	Max. current consumption
I_{max}	[A]	Max. current
I_{max}	[A]	Max. short-time DC-bus current
I_{max}	[A]	Max. DC-bus current
I_N	[A]	Rated current
$I_{N,\Delta}$	[A]	Rated current
$I_{N,Y}$	[A]	Rated current
J	[kgcm²]	Moment of inertia
J_{MB}	[kgcm²]	Moment of inertia
$KE_{LL\,150\,°C}$	[V /(1000 r/min)]	Voltage constant
$Kt_{0\,150\,°C}$	[Nm/A]	Torque constant
L_{10}	[h]	Bearing service life
L	[mH]	Mutual inductance
$L_{1\sigma}$	[mH]	Stator leakage inductance
$L_{2\sigma}$	[mH]	Rotor leakage inductance
L_N	[mH]	Rated inductance
m	[kg]	Mass
M_2	[Nm]	Output torque
M_{22}	[Nm]	Output torque
M_0	[Nm]	Stall torque
$M_{0,\,max}$	[Nm]	Max. standstill torque
$M_{2,\,GM}$	[Nm]	Output torque
$M_{2,\,max}$	[Nm]	Max. output torque
$M_{2,\,not}$	[Nm]	Emergency off-torque

M_a	[Nm]	Starting torque
$M_{a_,\,1}$	[Nm]	Starting torque
$M_{a_,\,2}$	[Nm]	Starting torque
M_{av}	[Nm]	Average dynamic torque
M_b	[Nm]	Stalling torque
M_B	[Nm]	Braking torque
M_k	[Nm]	Rated torque
M_{max}	[Nm]	Max. torque
M_N	[Nm]	Rated torque
n_2	[r/min]	Output speed
n_{21}	[r/min]	Output speed
n_{22}	[r/min]	Output speed
$n_{1,\,max}$	[r/min]	Max. gearbox input speed
$n_{1,\,max\,50\%}$	[r/min]	Max. gearbox input speed
n_{eto}	[r/min]	Transition speed
n_k	[r/min]	Speed
n_{max}	[r/min]	Max. speed
n_N	[r/min]	Rated speed
P_{max}	[kW]	Max. power input
Q_{BW}	[MJ]	Friction energy
Q_E	[J]	Maximum switching energy
Q_E	[KJ]	Maximum switching energy
R_1	[Ω]	Stator impedance
R_2	[Ω]	Rotor impedance
R	[Ω]	Insulation resistance
R	[Ω]	Min. insulation resistance
$R_{UV\,150\,°C}$	[Ω]	Stator impedance
$R_{UV\,20\,°C}$	[Ω]	Stator impedance
$S_{hü}$	[1/h]	Transition operating frequency
t_1	[ms]	Engagement time
t_2	[ms]	Disengagement time
t_{11}	[ms]	Delay time
t_{12}	[ms]	Rise time
T	[°C]	Max. surface temperature
T	[°C]	Min. ambient temperature for transport
T	[°C]	Max. ambient temperature for transport
T	[°C]	Max. ambient temperature of bearing
T	[°C]	Min. ambient storage temperature
T	[°C]	Ambient temperature
T	[°C]	Operating temperature
T	[°C]	Rated temperature
t	[h]	Service life
T_{opr}		Ambient operating temperature
$T_{opr,max}$	[°C]	Max. ambient operating temperature
$T_{opr,min}$	[°C]	Min. ambient operating temperature
t_{re}	[s]	Recovery time
$t_ü$	[ms]	Overexcitation time
U_Δ	[V]	Voltage range
U_{AC}	[V]	Mains voltage range

List of abbreviations

U_{AC}	[V]	Mains voltage
$U_{in,max}$	[V]	Max. input voltage
$U_{in,min}$	[V]	Min. input voltage
U_{max}	[V]	Max. input voltage
U_{max}	[V]	Max. mains voltage
U_{min}	[V]	Min. mains voltage
$U_{N, \Delta}$	[V]	Rated voltage
$U_{N, AC}$	[V]	Rated voltage
$U_{N, DC}$	[V]	Rated voltage
$U_{N, Y}$	[V]	Rated voltage
z_g		Number of teeth
Z_{ro}	[Ω]	Rotor impedance
Z_{rs}	[Ω]	Impedance
Z_{so}	[Ω]	Stator impedance
z_t		Number of teeth

CCC	China Compulsory Certificate
CE	Communauté Européenne
CEL	China Energy Label
CSA	Canadian Standards Association
CSAULE	Energy Verified Certificate
cURus	Combined certification marks of UL for the USA and Canada
DIN	Deutsches Institut für Normung e.V.
EAC	Customs union Russia / Belarus / Kazakhstan certificate
EMC	Electromagnetic compatibility
EN	European standard
IM	International Mounting Code
IP	International Protection Code
NEMA	National Electrical Manufacturers Association
UkrSEPRO	Certificate for Ukraine
UL	Underwriters Laboratory Listed Product
UR	Underwriters Laboratory Recognized Product
VDE	Verband deutscher Elektrotechniker (Association of German Electrical Engineers)

Product information

In combination with three-phase AC motors, our helical gearboxes form a compact and powerful drive unit. Numerous options at the input and output end provide for the drive to be exactly adapted to your application.

The robust helical gearboxes feature high permissible radial forces, closely stepped ratios and a low backlash. They are available in 2-stage and 3-stage design with a output torque up to 14000 Nm and a ratio of up to i= 370.

Versions

- Fine-scaling of size / torque - provides for an optimum machine adaptation
- Standardised shaft and flange dimensions for an easy machine integration
- High efficiency

Three-phase AC motors as a basis for geared motors

In a power range of 0.06 to 55 kW, Lenze offers inverter-compatible three-phase AC motors for comprehensive tasks.
These drives come in different efficiency classes and can be used for the versions required for the versions required for open-loop or closed-loop controlled inverter operation.

- IE1 motors up to a power of 0.55 kW
- IE3 motors from 0.75 kW to 55 kW

Customer benefit:

- Different efficiency classes for the greatest economic benefit
- Space-saving thanks to compact direct attachment to Lenze gear-boxes
- Can be used universally for a wide range of machine tasks due to the market-oriented modular system

The product name

Gearbox type	Product range		Design	Rated torque [Nm]	Product
Helical gearbox	g500	-	H	45	g500-H45
				100	g500-H100
				140	g500-H140
				210	g500-H210
				320	g500-H320
				450	g500-H450
				600	g500-H600
				850	g500-H850
				1500	g500-H1500
				3000	g500-H3000
				5000	g500-H5000
				8000	g500-H8000
				14000	g500-H14000

g500-H helical gearbox with three-phase AC motor

g500-H helical gearbox with three-phase AC motor and 8400 motec inverter

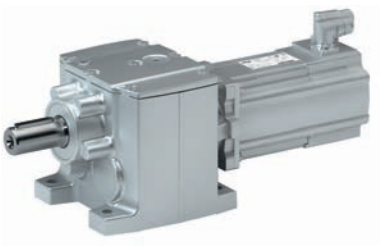

g500-H helical gearbox with servo motor

Equipment

Overview

The equipment includes all the options available as standard and all the built-on accessories of the product.

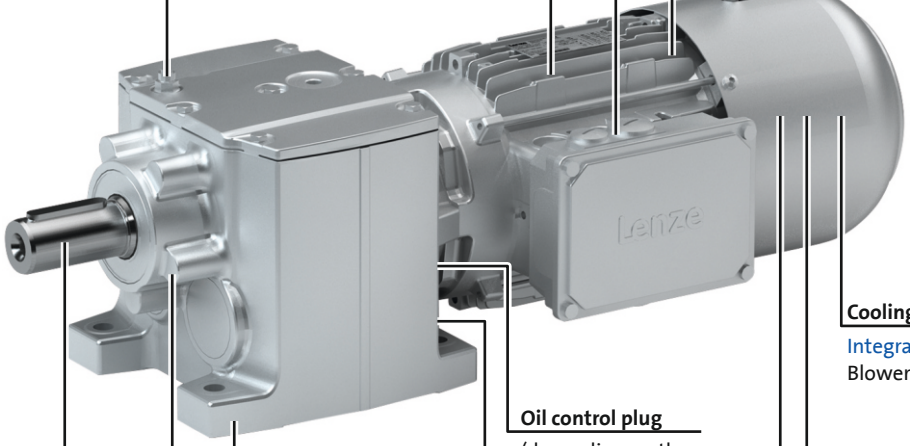

6.3

Standard design

- For the m540 motor, only temperature monitoring with PTC is available.

1 - Detailed information on housing type.

Equipment

Mounting position, position of system components

- ► In the following graphics, the terminal box in position 2 is colour-coded.
  If the mounting position (A ... F) changes, the terminal box positions 2 ... 5 are rotated accordingly.
- ► To reduce the number of different versions, the gearboxes can also be ordered with combined mounting positions:
  - g500-H45 in mounting position ABCDEF
  - g500-H100 ... H450 in mounting position AEF

Mounting positions A ... F

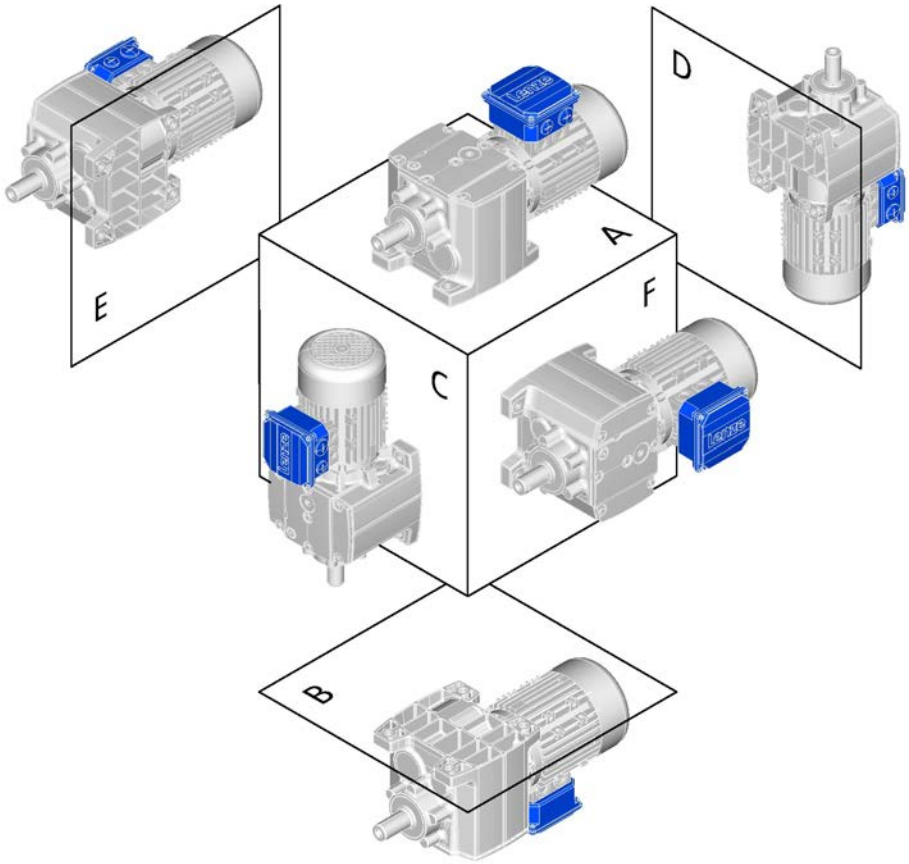

Terminal box positions 2 ... 5

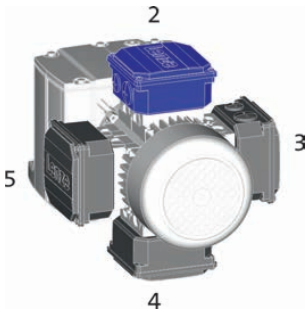

Cable entry positions 1 ... 5

- ► For details regarding the cable entry see motor chapter/product extensions.

The geared motor kit

g500-H45 ... H450

Product						
Gearbox	g500-H45	g500-H100	g500-H140	g500-H210	g500-H320	g500-H450
Motor assignment min.	MD□MA□□-063	MD□MA□□-063	MD□MA□□-063	MD□MA□□-063	MD□MA□□-063	MD□MA□□-063
Motor assignment max.	MD□MA□□-071	m550-P90	m550-P90	m550-P100	m550-P112	m550-P132
Technical data						
Output torque max.	45 Nm	100 Nm	140 Nm	210 Nm	320 Nm	450 Nm
Drive power min.	0.06 kW	0.12 kW	0.12 kW	0.12 kW	0.12 kW	0.12 kW
Drive power max.	0.55 kW	1.5 kW	1.5 kW	3.0 kW	4.0 kW	7.5 kW
Dimensions [mm]						
Solid shaft with featherkey	14 x 28 20 x 40	20 x 40	25 x 50	25 x 50	30 x 60	30 x 60 35 x 70
Solid shaft without keyway	20 x 40	20 x 40	25 x 50	25 x 50	30 x 60	35 x 70
Output flange	120/140/160	120/140/160	120/140/160	120/140/160/200	160/200	160/200/250

- ► The designs are only available for the gearboxes displayed above in the table.
- ► Values printed in bold are standard versions.
  Values not printed in bold are possible extensions, some for an additional charge.

Design	
Conformity	**CE** EAC
Approval	**Without** CCC/cURus
Degree of protection	**IP55** IP65/IP66
Surface and corrosion protection	**Without** Different types of OKS
Colour	**Not coated** Primed/RAL colours
Solid shaft	**With featherkey (V□□)** Without keyway
Shaft material	**Steel** stainless steel
Shaft sealing ring material	**NBR** FKM (Viton)
Driven shaft bearing	**Normal** Reinforced
Paste for shaft mounting	**Without** Enclosed
Gearbox type	**With foot (VBR)** **With centering (VCR)** With output flange (VCK) With output flange (VCP) With foot and centering (VAR) With foot and output flange (VAK)
Lubricant	**Mineral oil** Synthetic oil Food-compatible oil

Design	
Mounting position	**A/B/C/D/E/F** Combined
Power connection	**Terminal box** Plug connectors
Spring-applied brake	**Without** Brake design: Standard/Longlife Brake version: Standard/Overexcited/Cold Brake
Feedback	**Without** Resolver Absolute value encoder Incremental encoder
Cooling	**Integral fan** Blower
Temperature monitoring	**TKO thermal contact** PTC thermistor KTY thermal detector

The geared motor kit

g500-H45 ... H450

Gearbox design: solid shaft, with foot

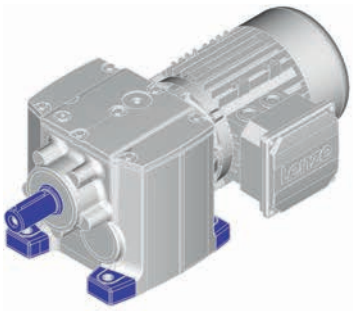

Without centring (VBR)

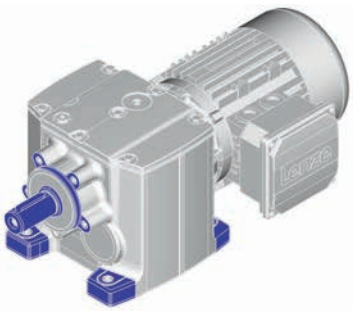

With centering (VAR)

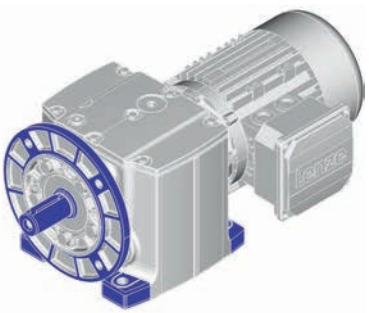

Flange with through holes (VAK)

Gearbox design: solid shaft, without foot

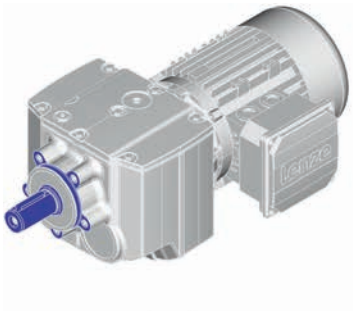

With centering (VCR)

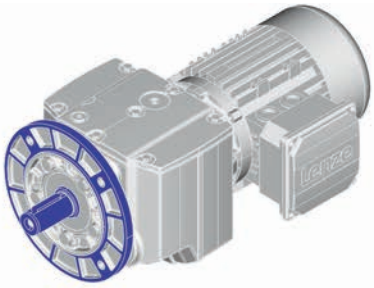

Flange with through holes (VCK)

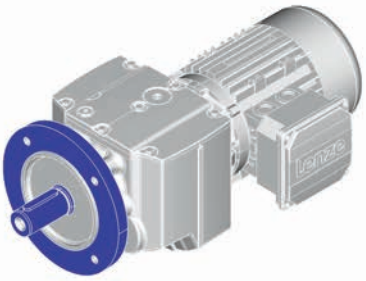

Flange with through holes (VCP)

► VCP (reinforced flange) for transmitting particularly high radial and axial forces.

The geared motor kit

g500-H600 ... H3000

Product				
Gearbox	g500-H600	g500-H850	g500-H1500	g500-H3000
Motor assignment min.	MD□MA□□-063	MD□MA□□-063	MD□MA□□-071	m550-P90
Motor assignment max.	m550-P132	m550-P132	m550-P180	m550-P180
Technical data				
Output torque max.	600 Nm	850 Nm	1500 Nm	3000 Nm
Drive power min.	0.12 kW	0.25 kW	0.55 kW	1.1 kW
Drive power max.	7.5 kW	7.5 kW	30 kW	30 kW
Dimensions [mm]				
Solid shaft with featherkey	35 x 70 40 x 80	40 x 80	50 x 100	60 x 120
Solid shaft without keyway	35 x 70	40 x 80	50 x 100	60 x 120
Output flange	200/250	250/300	250/300/350	300/350/450

- ► The designs are only available for the gearboxes displayed above in the table.
- ► Values printed in bold are standard versions.
  Values not printed in bold are possible extensions, some for an additional charge.

Design	
Conformity	**CE** EAC
Approval	**Without** CCC/cURus
Degree of protection	**IP55** IP65/IP66
Surface and corrosion protection	**OKS-S** Different types of OKS
Colour	**Painted in RAL colours** Primed
Solid shaft	**With featherkey (V□□)** Without keyway
Shaft material	**Steel** stainless steel
Shaft sealing ring material	**NBR** FKM (Viton)
Driven shaft bearing	**Normal** Reinforced
Paste for shaft mounting	**Without** Enclosed
Gearbox type	**With foot (VBR)** **With centering (VCR)** With output flange (VCK) With foot and centering (VAR) With foot and output flange (VAK)
Lubricant	**Mineral oil** Synthetic oil Food-compatible oil

Design	
Mounting position	**A/B/C/D/E/F**
Power connection	**Terminal box** Plug connectors
Spring-applied brake	**Without** Brake design: Standard/Longlife Brake version: Standard/Overexcited/Cold Brake
Feedback	**Without** Resolver Absolute value encoder Incremental encoder
Cooling	**Integral fan** Blower
Temperature monitoring	**TKO thermal contact** PTC thermistor KTY thermal detector

The geared motor kit

g500-H600 ... H3000

Gearbox design: solid shaft, with foot		
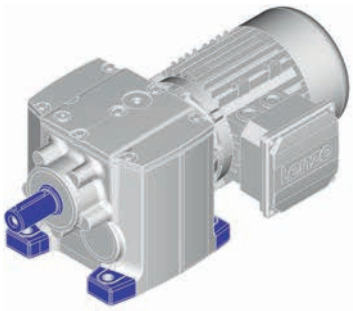 Without centring (VBR)	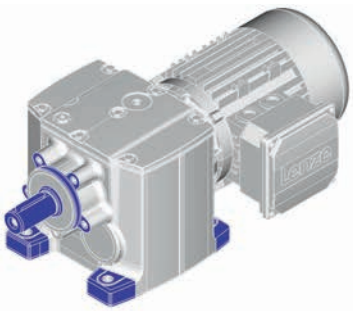 With centering (VAR)	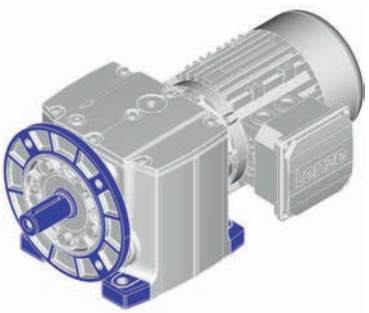 Flange with through holes (VAK)

Gearbox design: solid shaft, without foot	
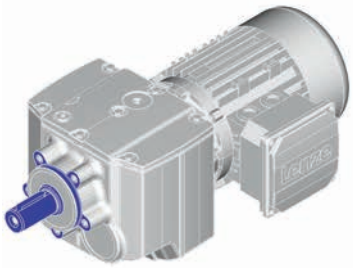 With centering (VCR)	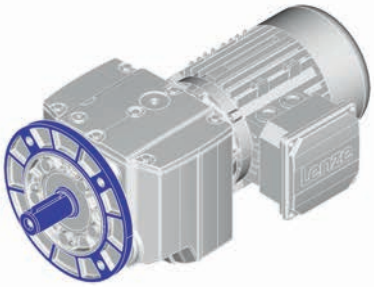 Flange with through holes (VCK)

The geared motor kit

g500-H5000 ... H14000

Product			
Gearbox	g500-H5000	g500-H8000	g500-H14000
Motor assignment min.	m540-P90	m540-P100	m540-P112
Motor assignment max.	m540-P250	m540-P250	m540-P250
Technical data			
Output torque max.	5000 Nm	8000 Nm	14000 Nm
Drive power min.	1.5 kW	2.2 kW	4.0 kW
Drive power max.	55 kW	55 kW	55 kW
Dimensions [mm]			
Solid shaft with featherkey	70 x 140	90 x 170	110 x 210
Solid shaft without keyway			
Output flange	350/450	450/550	450/550

- ► The designs are only available for the gearboxes displayed above in the table.
- ► Values printed in bold are standard versions.
  Values not printed in bold are possible extensions, some for an additional charge.

Design	
Conformity	**CE** EAC
Approval	**Without** CSA/cURus
Degree of protection	**IP55** IP65
Surface and corrosion protec-tion	**OKS-S** Different types of OKS
Colour	**Painted in RAL colours** Primed
Solid shaft	**With featherkey (V□□)**
Shaft material	**Steel**
Shaft sealing ring material	**NBR**
Driven shaft bearing	**Normal**
Paste for shaft mounting	**Without**
Gearbox type	**With foot (VBR)** **With centering (VCR)** [1] With output flange (VCK)
Lubricant	**Mineral oil** Synthetic oil Food-compatible oil

[1] Only intended for g500-H5000.

Design	
Mounting position	**A/B/C/D/E/F**
Power connection	**Terminal box** Plug connectors
Spring-applied brake	**Without** Brake design: Standard brake version: Standard
Feedback	**Without** Incremental encoder
Cooling	**Integral fan** Blower
Temperature monitoring	**PTC thermistor**

The geared motor kit

g500-H5000 ... H14000

Gearbox design: solid shaft, with foot
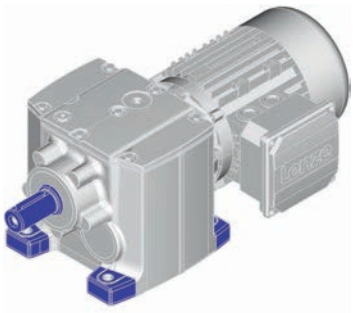 Without centring (VBR)

Gearbox design: solid shaft, without foot	
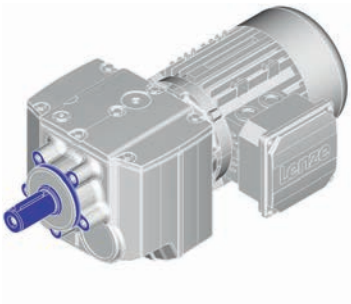 With centering (VCR)	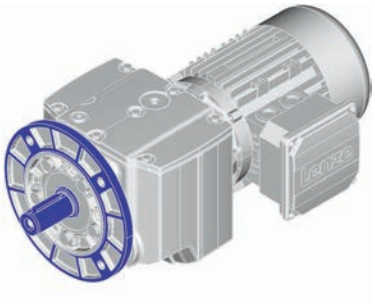 Flange with through holes (VCK)

6.3

General information about the data provided in this catalogue

The powers, torques and speeds specified in this catalogue are rounded values and are valid under the following conditions:

- Operating time/day = 8 h (100% OT)
- Duty class I for up to 10 switching operations/h
- Mounting positions and designs in this catalogue
- Standard lubricant
- T_{amb} = 20 °C for gearboxes,
  T_{amb} = 40 °C for motors (in accordance with EN 60034)
- Site altitude ≤ 1000 m amsl
- The selection tables provide the permissible mechanical powers and torques. For notes on the thermal power limit, see chapter drive dimensioning.
- The rated power specified for motors and geared motors applies to operating mode S1 (in accordance with EN 60034).

Under different operating conditions, the values obtained may vary from those listed here.
In the case of extreme operating conditions, please consult your Lenze sales office.

Procedure of a configuration process

Workflow

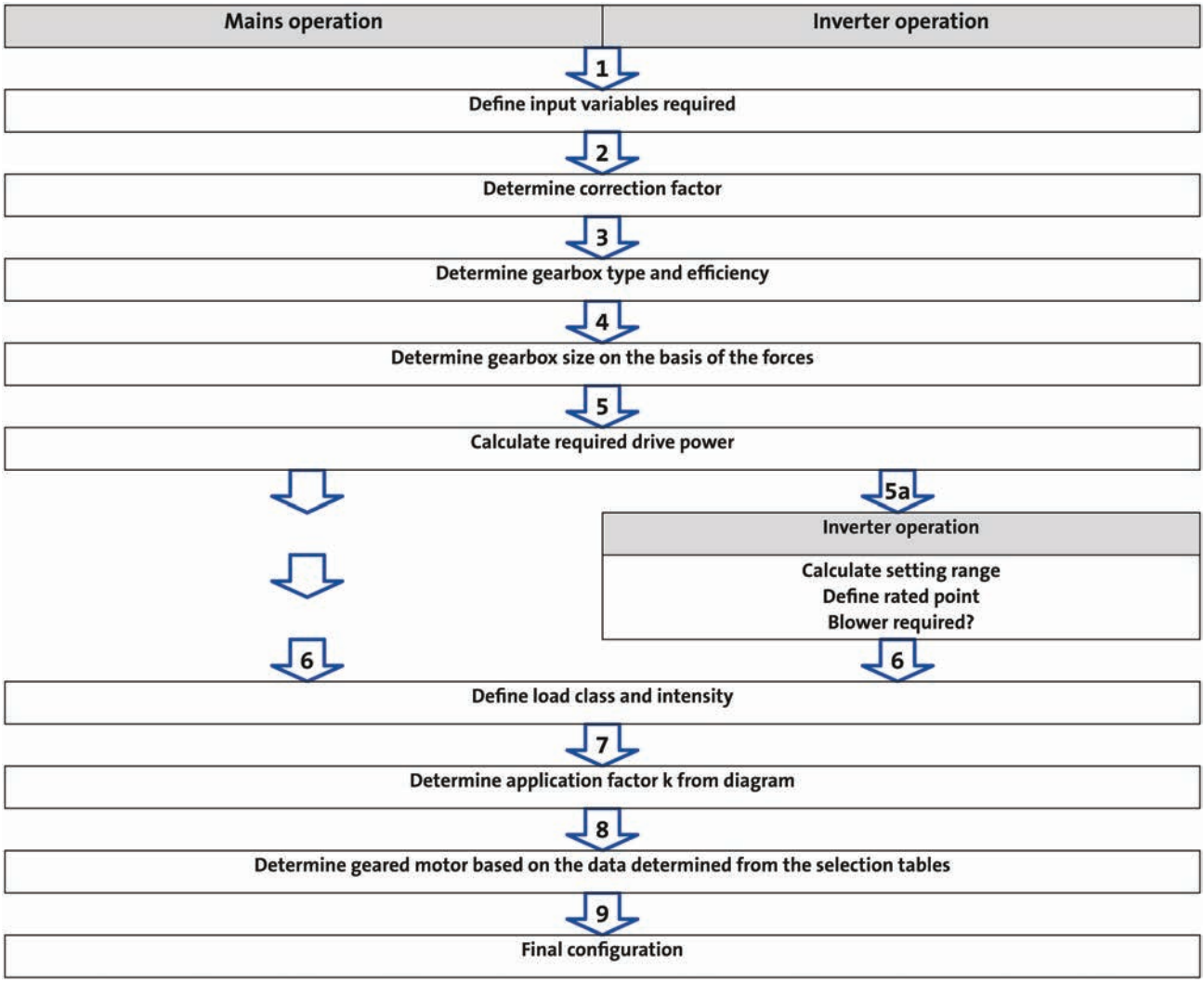

You can use our configuring software Drive Solution Designer for precise drive dimensioning.

The Drive Solution Designer helps you to carry out a fast and high-quality drive dimensioning.
The software includes well-founded and proven knowledge on drive applications and electro-mechanical drive components.

Please contact your Lenze sales office.

Procedure of a configuration process

1 required input variables

Load torque		$M_{L,max}$=	[Nm]
	In inverter operation	$M_{L,min}$=	[Nm]
Load speed		$n_{L,max}$=	[r/min]
	In inverter operation	$n_{L,min}$=	[r/min]
External moments of inertia		J_{ext}=	[$kgcm^2$]
Operating time / day		BD =	[h]
Switching operations per h		S_h=	[1/h]
Runtime for $M_{L,max}$	In inverter operation		[%]

2 determine correction factor

Operating modes and operating time						
S1	ED	[%]	100			
	k_L =		1.0			
S2	ED	[%]	10	30	60	90
	k_L =		1.4 - 1.5	1.15 - 1.2	1.07 - 1.1	1.0 - 1.05
S3	ED	[%]	15	25	40	60
	k_L =		1.4 - 1.5	1.3 - 1.4	1.15 - 1.2	1.05 - 1.1
S6	ED	[%]	15	25	40	60
	k_L =		1.5 - 1.6	1.4 - 1.5	1.3 - 1.4	1.15 - 1.2
Site altitude						
	H	[m]	≤ 1000	≤ 2000	≤ 3000	≤ 4000
	k_H =		1	0.95	0.9	0.85
Ambient temperature						
	T_U =	[°C]	≤ 40	≤ 45	≤ 50	≤ 55
	k_{TU} =		1	0.95	0.9	0.8

24 - Operating modes

Procedure of a configuration process

3 determine gearbox type and efficiency

Gearbox type			Axial gearboxes		Right-angle gearboxes
			Helical gearbox	Shaft-mounted	Bevel gearbox
Product			g500-H	g500-S	g500-B
Gearbox efficiency	2-stage gearboxes	η_G	0.96	0.96	0.96
	3-stage gearboxes	η_G	0.95	0.95	0.95

4 determine gearbox size based on the forces on the output

Transmission element		Gear wheels	Sprockets	Toothed belt pulleys (depending on the initial stress)	Narrow V-belt (depending on the initial stress)
Additional radial force factor	f_z =	≥ 17 teeth = 1.0 < 17 teeth = 1.15	≥ 20 teeth = 1.0 < 20 teeth = 1.25 < 13 teeth = 1.4	With belt tightener = 2.0 - 2.5 Without belt tightener = 2.5 - 3.0	1.5 - 2.0
		Calculation		**Check**	
Radial force	[N]	$F_{rad} = 2000 \times \frac{M_{L,max} \times f_z}{dw}$		$F_{rad} \leq f_w \times F_{rad,max}$	
Axial force	[N]			$F_{ax} \leq F_{rad,max} \times 0.5$	

d_w= effective diameter [mm] transmission element
f_w= additional load factor

► For permissible radial and axial forces and additional load factor see the "Technical data" chapter

5 calculate drive power

		Calculation	
Drive power required	[kW]	$P_1 = \frac{M_{L,max} \times n_{L,max}}{9549 \times k_L \times k_H \times k_{Tu} \times \eta_g}$	

k_L= Correction factor - operating mode
k_H= correction factor - installation height
k_{TU}= correction factor - ambient temperature

Procedure of a configuration process - mains operation

6 calculate intensity and determine duty class

Load class	Load type	Intensity
I	Smooth operation, small or light jolts	$F_I \leq 1.25$
II	Uneven operation, average jolts	$1.25 < F_I \leq 4$
III	Uneven operation, severe jolts and/or **alternating load**	$F_I > 4$

25 - Duty classes

	Calculation	
Intensity	$F_I = \frac{\frac{J_L}{i^2} + J_M + J_B + J_Z}{J_M + J_B + J_Z}$	

i= gearbox ratio
J_L= moment of inertia of the load
J_M= moment of inertia of the motor
J_B= moment of inertia of the brake
J_Z= additional moment of inertia (handwheel, 2nd shaft end ...)

7 determine application factor k from diagram

28 - Load capacity and application factor

Procedure of a configuration process - mains operation

8 determine geared motor based on the data determined from the selection tables

Selection table		Check
Drive power P_N	[kW]	$P_1 \leq P_N$
Output speed n_2	[r/min]	$n_{L,max} \approx n_2$
Output torque M_2	[Nm]	$M_{L,max} \leq M_2$
Load factor c		$k \leq c$
Order information		**Example**
Number of stages		2
Ratio i		3.267
Product gearbox		g500-H140
Product motor		m550-P80/M4

28 - Load capacity and application factor

Example: structure of a selection table

50 Hz: P_N = 0.75 kW ← Rated power P_N

2-stage gearboxes ← Number of the gear stage

Mains operation 400 V, 50 Hz			Inverter operation 5 Hz -		- 20 Hz		- 50 Hz (1:10)			- 87 Hz (1:17.4)			i	Product		
n_2 [r/min]	M_2 [Nm]	c	n_{22} [r/min]	M_{22} [Nm]	n_{21} [r/min]	M_2 [Nm]	n_2 [r/min]	M_2 [Nm]	c	n_2 [r/min]	M_2 [Nm]	c		g500	m5□□	
444	16	4.3	44	12	184	16	444	16	4.3	784	16	3.5	3.267	-H140	50-P80/M4	
432	16	3.9	43	12	179	16	432	16	3.9	763	16	3.2	3.354	-H100	50-P80/M4	

Output speed n_2 ↑ Output torque M_2 ↑ Load capacity **c** ↑

Ratio i ↑ Product Gearbox ↑ Product Motor ↑

Procedure of a configuration process - inverter operation

5a calculate range of adjustment and determine rated point

		Calculation	
Setting range		$V = \frac{n_{L,max}}{n_{L,min}}$	
Setting range	Motor with integral fan	≤ 2.5 (20 ... 50 Hz)	≤ 4.35 (20 ... 87 Hz)
	Motor with blower	≤ 10 (5 ... 50 Hz)	≤ 17.4 (5 ... 87 Hz)
Rated point at		50 Hz	87 Hz

6 calculate intensity and determine duty class

	Calculation	
Intensity	$M_I = \frac{M_{L,max}}{M_{L,min}}$	**For alternating load, select load class III!**

Load class	Load type	Intensity
I	Smooth operation, small or light jolts	$M_I \leq 1.5$
II	Uneven operation, average jolts	$1.5 < M_I \leq 2$
III	Uneven operation, severe jolts and/or alternating load	$2 < M_I \leq 2.5$

25 - Duty classes

7 determine application factor k from diagram

28 - Load capacity and application factor

Procedure of a configuration process - inverter operation

8 determine geared motor based on the data determined from the selection tables

Selection table			Check	
Drive power P_N		[kW]	$P_1 \leq P_N$	
Max. output speed n_2		[r/min]	$n_{L,max} \approx n_2$	
Min. output speed n_{21}	Self-ventilated	[r/min]	$n_{L,min} \approx n_{21}$	Setting range 2.5 (50 Hz) Setting range ≤ 4.35 (87 Hz)
Min. output speed n_{22}	Forced-ventilated	[r/min]	$n_{L,min} \approx n_{22}$	Setting range ≤ 10 (50 Hz) Setting range ≤ 17.4 (87 Hz)
	Self-ventilated (Reduced output torque)	[r/min]	$n_{L,min} \approx n_{22}$	
Output torque M_2		[Nm]	$M_{L,max} \leq M_2$	
Load factor c			$k \leq c$	
Order information			**Example**	
Number of stages			2	
Ratio i			3.267	
Product gearbox			g500-H140	
Product motor			m550-P80/M4	

28 - Load capacity and application factor
30 - Torque derating at low motor frequencies

Example: structure of a selection table

50 Hz: P_N = 0.75 kW
87 Hz: P_N = 1.35 kW ← Rated power P_N

2-stage gearboxes ← Number of the gear stage

Mains operation 400 V, 50 Hz			Inverter operation 5 Hz -		- 20 Hz		- 50 Hz (1:10)			- 87 Hz (1:17.4)			i	Product		
n_2 [r/min]	M_2 [Nm]	c	n_{22} [r/min]	M_{22} [Nm]	n_{21} [r/min]	M_2 [Nm]	n_2 [r/min]	M_2 [Nm]	c	n_2 [r/min]	M_2 [Nm]	c		g500	m550	
444	16	4.3	44	12	184	16	444	16	4.3	784	16	3.5	3.267	-H140	-P80/M4	
432	16	3.9	43	12	179	16	432	16	3.9	763	16	3.2	3.354	-H100	-P80/M4	

Min. Output speed n_{22}
Min. Output torque M_2
Min. Output speed n_{21}
Max. Output speed n_2
Max. Output torque M_2
Load capacity c
Ratio i
Product Gearbox
Product Motor

Procedure of a configuration process

9 Final configuration

More information regarding the final configuration can be found under: **- The modular geared motor system** **- Product extensions for gearboxes, motors**	
Check operating conditions	- Operating temperature (observe lubricant, material of shaft sealing ring) - Degree of protection - Supply voltage - Surface protection required - Approvals - Conformity
Check and define connection dimensions	- Driven shaft - Foot, output flange, centering with threaded pitch circle
Determine mounting position and position of the system blocks	- Mounting position A/B/C/D/E/F or combined - Terminal box position, shaft position, flange position
Select product extensions at the gearbox (differing depending on the gearbox type)	- Torque plate at the base, threaded pitch circle, rubber buffer - Hollow shaft cover, shrink disc cover
Select product extensions at the motor	- Connection type (terminal box, connector) - Brake - Blower (inverter operation) - Feedback - Temperature monitoring

Standards

Operating modes

Operating modes S1 ... S10 as specified by EN 60034-1 describe the basic stress of an electrical machine.

In continuous operation a motor reaches its permissible temperature limit if it outputs the rated power dimensioned for continuous operation. However, if the motor is only subjected to load for a short time, the power output by the motor may be greater without the motor reaching its permissible temperature limit. This behaviour is referred to as overload capacity.
Depending on the duration of the load and the resulting temperature rise, the required motor can be selected reduced by the overload capacity.

The most important operating modes

Continuous operation S1	Short-time operation S2
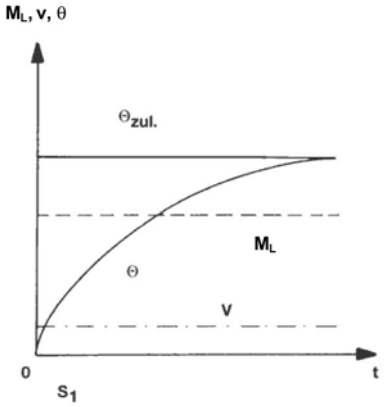	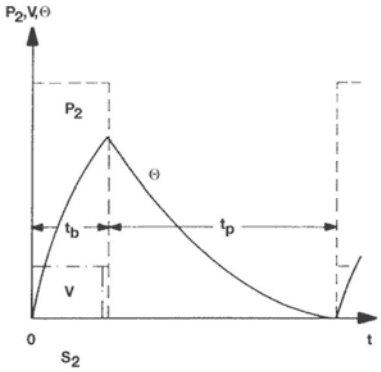
Operation with a constant load until the motor reaches the thermal steady state. The motor may be actuated continuously with its rated power.	Operation with constant load; however, the motor does not reach the thermal steady state. During the following standstill, the motor winding cools down to the ambient temperature again. The increase in power depends on the load duration.

Intermittent operation S3	Non-intermittent periodic operation S6
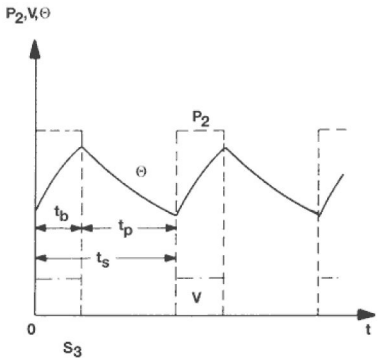	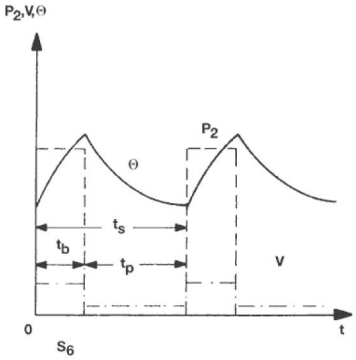
-	-

Standards

Duty classes

Depending on the load type, the duty classes or impacts are divided as follows:

Duty class	Load type
I	Smooth operation, small or light jolts
II	Uneven operation, average jolts
III	Uneven operation, severe jolts and/or alternating load

In order to support you in classifying your driven machine regarding the right duty class, the following shows sample applications with the corresponding duty class. Depending on, for instance, the operating frequency, driven machines can also have a higher impact.
In case of uncertainties, please contact your Lenze sales office.

Drive	Duty class
Construction machines	II
Chemical industry	II
Conveyors	II
Fans	II
Plastics industry	II
Wood working	III
Hoists	III
Metal working	III
Food	II
Paper industry	III
Stones	III
Textile industry	II

Standards

Degrees of protection

The degree of protection indicates the suitability of a motor for specific ambient conditions with regard to humidity as well as the protection against contact and the ingress of foreign particles. The degrees of protectionare classified by EN 60529.

The first code number after the code letters IP indicates the protection against the ingress of foreign particles and dust.
The second code number refers to the protection against the ingress of humidity.

Code number 1	Degree of protection	Code number 2	Degree of protection
0	No protection	0	No protection
1	Protection against the ingress of foreign particles d > 50 mm. No protection in the case of deliberate access	1	Protection against vertically dripping water (dripping water).
2	Protection against medium-sized foreign particles, d > 12 mm, keeping away fingers or similar	2	Protection against diagonally falling water (dripping water), 15 ° compared to normal service position.
3	Protection against small foreign particles d > 2.5 mm. Keeping away tools, wires and the like	3	Protection against spraying water, up to 60 ° to the vertical
4	Protection against granular foreign particles, d > 1 mm, keeping away tools, wires and the like	4	Protection against spraying water from all directions.
5	Protection against dust deposits (dust-protected), complete protection against contact.	5	Protection against water jets from all directions.
6	Protection against the ingress of dust (dust-proof), complete protection against contact.	6	Protection against choppy seas or heavy water jets (flood protection).

Thermal power limit

The thermal power limit, defined by the heat balance, limits the permissible permanent gearbox power.
It is affected by:
- the churning losses in the lubricant. These are determined by the mounting position and the circumferential speed of the gears;
- the load and the speed;
- the ambient conditions: temperature, air circulation, input or dissipation of heat via shafts and the foundations.

We ask you to make a thermal check with the Drive Solution Designer (DSD) or contact the Lenze office responsible for you

- if the input speed n1 > 1500 r/min is exceeded in case of the gearbox ratios given in the following (can be e.g. recognised by the empty cells in the selection tables):

g500 thermal power limit	
Product	Ratio i
g500-H850 ... H3000	≤ 10
g500-S2100 ... S4500	≤ 16
g500-B1500 ... B4300	≤ 25

g500 thermal power limit	
Product	Ratio i
g500-H5000 ... H14000	≤ 25
g500-S8000 ... S19000	≤ 40
g500-B8000 ... B20000	≤ 60

- If the drive speeds mentioned in the following will be exceeded as a function of the mounting position:

g500 thermal power limit			
Product	Mounting position A	Mounting position A, B, E, F	Mounting position C, D
MD□MA□□063 ... 100 MH□MA□□063 ... 100	4000 r/min	3500 rpm	3000 r/min
MD□MA□□112 ... 132 MH□MA□□112 ... 132 m240-P112 ... P132 m550-P112 ... P132	3000 r/min	2600 rpm	1500 r/min
MD□MA□□160 ... 180 MH□MA□□160 ... 180 m240-P160 ... P180 m550-P160 ... P180	2000 r/min	1800 rpm	1500 r/min
m540-P90 ... P250	1500 r/min	1500 r/min	1500 r/min

► For a short period of time up to 5 min, 30 % higher speeds are permissible

Possible ways of extending the application area

- Synthetic lubricant (option)
- Shaft sealing rings made from FKM material/Viton (option)
- Reduction in lubricant quantity (after consultation with Lenze)
- Cooling of the geared motor by means of air convection on the machine/system

Load capacity and application factor

Load capacity c of gearboxes
Rated value for the load capacity of Lenze geared motors.
- c is the ratio of the permissible rated torque of the gearbox to the rated torque supplied by the drive component (e.g. the built-in Lenze motor).
- The value of c must always be greater than the value of the application factor k calculated for the application.

Required: c ≥ k

Application factor k (according to DIN 3990)
Takes into account the influence of temporally variable loads which are actually present during the anticipated operating time of gearboxes and geared motors.
k is determined by:
- the type of load
- the load intensity
- temporal influences

Application factor k

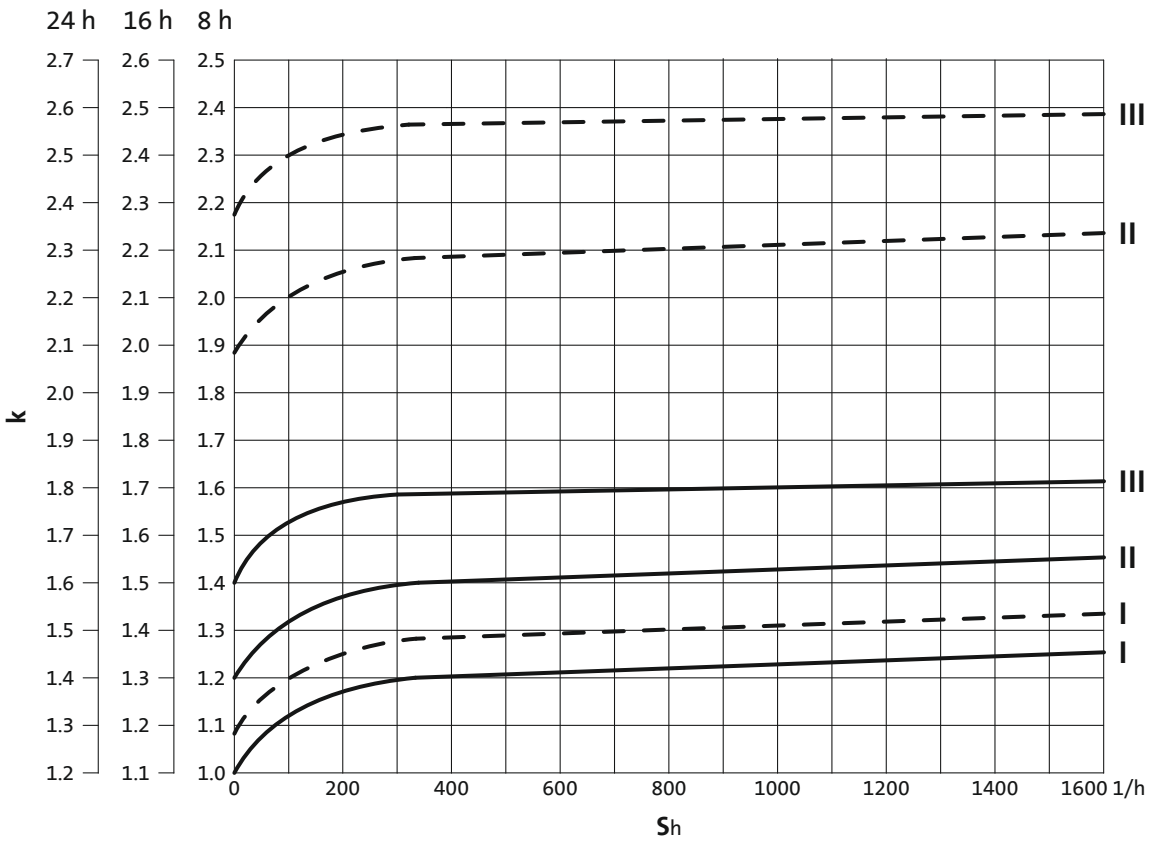

► S_h= switchings/h
► ——— Three-phase AC motors MD□MA
— — — Three-phase AC motors m240/m540/m550

Operational performance of three-phase AC geared motors

Operation on the inverter

An inverter enables energy-efficient operation of a system in virtually all application cases. The various operating modes, which can be created by making just a few simple settings, facilitate this. The following characteristics and corresponding specifications listed on the following pages can be used to calculate the optimum operating mode during the project planning phase.

Standard setting

In its initial state when delivered, the inverter is set up for basic operation with a three-phase AC motor with vector control. When operated in this mode, the rated torque of the motor is available in a setting range up to 50 Hz.

V/f at 50 Hz

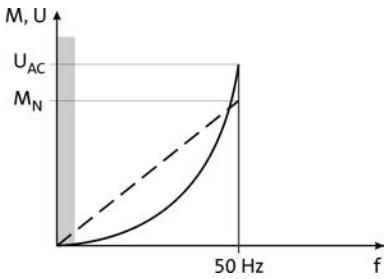

Extended setting range up to 87 Hz

If the V/f reference point on the inverter is set to 87 Hz, the rated torque can be used across an extended setting range. Here, a 230/400V motor is for example used and operated in a delta layout with a 400V inverter. The setting range is then increased by 40 %. The inverter must be dimensioned for a rated motor current of 230 V.

V/f at 87 Hz

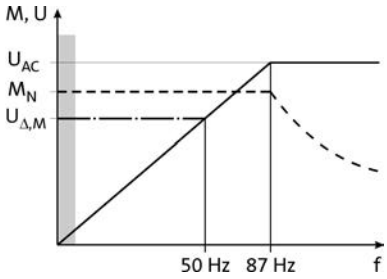

Operational performance of three-phase AC geared motors

Torque derating at low motor frequencies

The diagram shows the motor frame size-dependent torque reduction for self-ventilated motors, taking the thermal behaviour during actuation of the inverter into consideration.

Torque characteristics

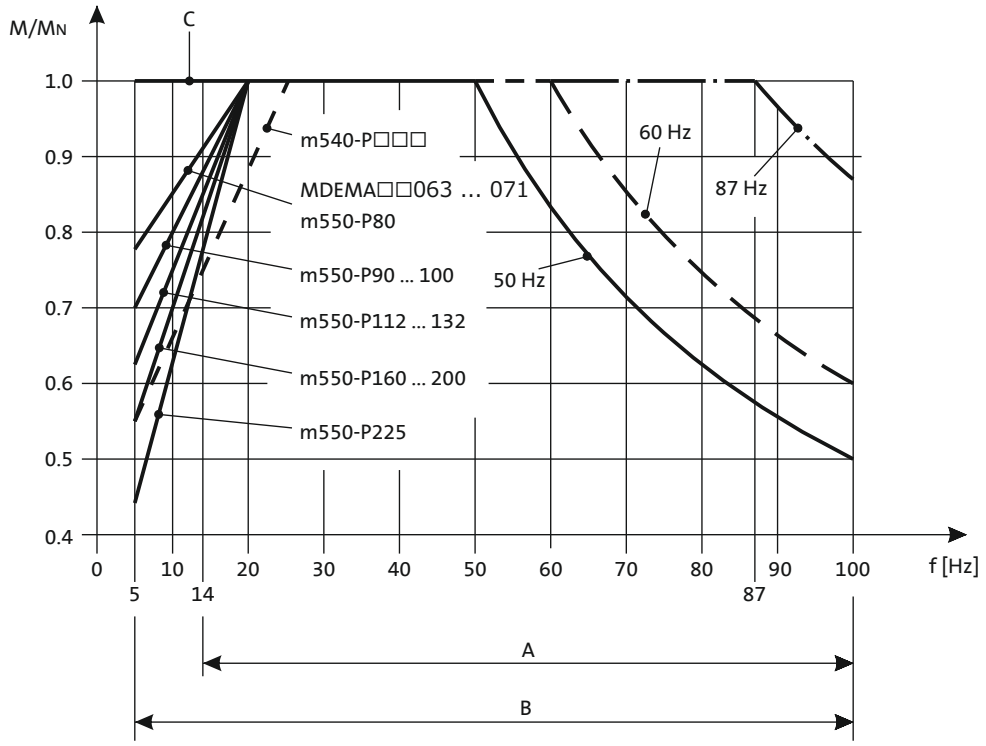

A = Operation with integral fan and brake
B = Operation with integral fan and brake control "Holding current reduction"
C= operation with blower

Technical data at a glance

The following tables contain the most important data of the gearbox with the motors that can be attached for an approximate dimensioning process of a geared motor. Detailed information can be found in the following chapters.

The data given in the tables apply to
- input speed n_1= 1400 r/min
- application factor c= 1.0

The data for the max. radial force refer to
- foot mounting (VBR)
- normal storage
- application factor c= 1.3

For further designs see the "Technical data" chapter.

► The rated torque can be gathered from the last digits of the product name e.g. g500-H45 (45 Nm).

In order to calculate the exact ratio, the number of teeth z_g (driven) can be divided by the number of teeth z_t (driving). These are rounded values.

g500-H45, 2-stage gearboxes

Output speed	Max. output torque	Max. drive power	Ratio	Number of teeth		Max. radial force	Backlash	Rated power	
							Standard	Motor	
n_2	$M_{2, max}$	$P_{1, max}$	i	z_g	z_t	$F_{rad,max}$		$P_{N, min}$	$P_{N, max}$
							± 20 %		
[r/min]	[Nm]	[kW]				[N]	[arcmin]	[kW]	[kW]
541	18	1.05	2.597	345	896	470	41	0.18	0.55
412	19	0.84	3.413	75	256	620	39	0.18	0.55
322	21	0.73	4.368	315	1376	670	39	0.18	0.55
264	27	0.77	5.312	253	1344	700	29	0.18	0.55
236	29	0.74	5.965	115	686	720	28	0.18	0.55
201	30	0.65	6.982	55	384	760	28	0.12	0.55
179	32	0.62	7.840	25	196	780	27	0.12	0.55
157	33	0.56	8.935	77	688	810	27	0.12	0.55
140	35	0.53	10.033	30	301	840	27	0.09	0.55
123	35	0.46	11.429	7	80	870	27	0.09	0.55
110	38	0.45	12.833	6	77	900	26	0.09	0.55
95.0	39	0.40	14.836	55	816	950	26	0.09	0.37
85.0	41	0.37	16.660	50	833	1000	26	0.09	0.37
74.0	42	0.34	19.013	77	1464	1050	26	0.06	0.37
66.0	44	0.31	21.350	20	427	1090	26	0.06	0.37
56.0	45	0.27	24.595	121	2976	1170	26	0.06	0.25
50.0	45	0.24	27.618	55	1519	1250	25	0.06	0.25
43.0	45	0.21	32.000	1	32	1340	26	0.06	0.25
38.0	45	0.18	35.933	15	539	1400	25	0.06	0.18
33.0	45	0.16	41.455	11	456	1450	26	0.06	0.18
31.0	45	0.15	46.550	20	931	1470	25	0.06	0.12
27.0	45	0.13	52.909	11	582	1500	26	0.06	0.12
24.0	45	0.12	59.413	80	4753	1500	25	0.06	0.12

Technical data at a glance

g500-H100, 2-stage gearboxes

Output speed	Max. output torque	Max. drive power	Ratio	Number of teeth		Max. radial force	Backlash	Rated power	
							Standard	Motor	
n_2	$M_{2, max}$	$P_{1, max}$	i	z_g	z_t	$F_{rad,max}$		$P_{N, min}$	$P_{N, max}$
							± 20 %		
[r/min]	[Nm]	[kW]				[N]	[arcmin]	[kW]	[kW]
430	62	2.88	3.354	48	161	1180	29	0.25	1.50
314	72	2.44	4.600	5	23	1340	28	0.25	1.50
279	75	2.26	5.167	6	31	1410	25	0.25	1.50
245	81	2.14	5.887	168	989	1480	27	0.25	1.50
224	83	2.01	6.440	25	161	1540	27	0.18	1.50
204	86	1.89	7.086	35	248	1600	24	0.25	1.50
176	92	1.74	8.214	14	115	1700	27	0.18	1.50
159	96	1.65	9.068	147	1333	1770	24	0.25	1.50
143	99	1.53	10.063	16	161	1850	27	0.25	1.50
127	100	1.37	11.360	25	284	1940	22	0.18	1.50
114	100	1.23	12.653	49	620	2030	24	0.18	1.50
100	100	1.08	14.490	49	710	2150	22	0.18	1.10
93.0	100	1.01	15.500	2	31	2210	23	0.25	1.10
82.0	100	0.88	17.750	4	71	2330	22	0.25	0.75
74.0	100	0.80	19.486	35	682	2430	23	0.12	0.75
65.0	100	0.70	22.314	35	781	2560	22	0.12	0.75
58.0	100	0.62	25.095	21	527	2590	23	0.12	0.75
49.0	100	0.53	28.738	42	1207	2620	22	0.12	0.55
44.0	100	0.48	31.805	77	2449	2640	22	0.12	0.37
39.0	100	0.42	36.422	154	5609	2650	21	0.12	0.37
35.0	100	0.38	39.857	7	279	2650	22	0.12	0.37
31.0	100	0.33	45.643	14	639	2650	21	0.12	0.37
26.0	70	0.20	52.510	49	2573	2650	22	0.12	0.18
23.0	80	0.20	60.133	98	5893	2650	21	0.12	0.18

Technical data at a glance

g500-H140, 2-stage gearboxes

Output speed	Max. output torque	Max. drive power	Ratio	Number of teeth		Max. radial force	Backlash	Rated power	
							Standard	Motor	
n_2	$M_{2, max}$	$P_{1, max}$	i	z_g	z_t	$F_{rad,max}$		$P_{N, min}$	$P_{N, max}$
							± 20 %		
[r/min]	[Nm]	[kW]				[N]	[arcmin]	[kW]	[kW]
441	82	3.91	3.267	15	49	1750	25	0.25	1.50
322	94	3.27	4.480	25	112	2000	24	0.25	1.50
252	103	2.80	5.733	15	86	2180	24	0.25	1.50
230	105	2.61	6.272	125	784	2260	23	0.18	1.50
198	106	2.27	7.269	26	189	2370	18	0.25	1.50
180	117	2.28	8.000	1	8	2430	24	0.18	1.50
160	117	2.02	9.029	35	316	2540	19	0.25	1.50
147	125	1.98	9.800	5	49	2630	23	0.25	1.50
125	128	1.72	11.554	294	3397	2800	18	0.25	1.50
114	132	1.63	12.640	25	316	2880	18	0.18	1.50
103	136	1.52	13.957	325	4536	2950	17	0.18	1.50
89.0	140	1.35	16.122	49	790	3050	18	0.18	1.50
81.0	140	1.22	17.802	91	1620	3150	18	0.18	1.50
73.0	140	1.10	19.750	4	79	3210	18	0.25	1.10
66.0	140	1.00	21.808	26	567	3300	17	0.25	1.10
58.0	140	0.88	24.829	35	869	3400	18	0.12	0.75
53.0	140	0.80	27.415	65	1782	3520	17	0.12	0.75
45.0	140	0.68	31.976	42	1343	3630	18	0.12	0.75
41.0	140	0.62	35.308	13	459	3700	17	0.12	0.75
35.0	140	0.53	40.526	154	6241	3850	17	0.12	0.37
32.0	140	0.48	44.748	143	6399	3920	17	0.12	0.37
28.0	129	0.39	50.786	14	711	4000	17	0.12	0.37
25.0	140	0.38	56.077	13	729	4050	17	0.12	0.37
20.0	89	0.20	66.908	98	6557	4100	17	0.12	0.18
18.0	98	0.20	73.879	91	6723	4150	17	0.12	0.18

Technical data at a glance

g500-H210, 2-stage gearboxes

Output speed	Max. output torque	Max. drive power	Ratio	Number of teeth		Max. radial force	Backlash	Rated power	
							Standard	Motor	
n_2	$M_{2, max}$	$P_{1, max}$	i	z_g	z_t	$F_{rad,max}$		$P_{N, min}$	$P_{N, max}$
							± 20 %		
[r/min]	[Nm]	[kW]				[N]	[arcmin]	[kW]	[kW]
428	126	5.82	3.389	18	61	1980	23	0.55	3.00
312	143	4.81	4.648	105	488	2250	23	1.10	3.00
260	159	4.45	5.583	12	67	2400	19	0.55	3.00
232	158	3.95	6.250	4	25	2500	18	0.55	3.00
189	172	3.51	7.657	35	268	2680	19	1.10	3.00
169	171	3.12	8.571	7	60	2780	18	1.10	3.00
148	182	2.91	9.799	294	2881	2960	18	0.55	3.00
135	189	2.76	10.720	25	268	3030	18	0.25	3.00
121	186	2.43	12.000	1	12	3200	17	0.25	3.00
106	201	2.30	13.673	49	670	3350	18	0.25	2.20
95.0	200	2.05	15.306	49	750	3470	17	0.25	2.20
87.0	210	1.97	16.750	4	67	3590	18	0.55	2.20
77.0	210	1.74	18.750	4	75	3720	17	0.55	1.50
66.0	210	1.50	21.802	126	2747	3870	18	0.25	1.50
59.0	210	1.34	24.405	42	1025	3900	17	0.25	1.50
53.0	210	1.21	27.119	42	1139	3900	17	0.25	1.50
48.0	210	1.08	30.357	14	425	3900	17	0.25	1.10
41.0	210	0.94	35.095	21	737	3900	17	0.12	0.75
37.0	210	0.84	39.286	7	275	4020	16	0.12	0.75
33.0	183	0.65	42.593	140	5963	4100	17	0.12	0.55
30.0	206	0.66	47.679	28	1335	4220	16	0.12	0.55
26.0	137	0.38	54.438	16	871	4350	17	0.12	0.37
23.0	155	0.39	60.938	16	975	4450	16	0.12	0.37

Technical data at a glance

g500-H210, 3-stage gearboxes

Output speed	Max. output torque	Max. drive power	Ratio	Number of teeth		Max. radial force	Backlash	Rated power	
							Standard	Motor	
n_2	$M_{2, max}$	$P_{1, max}$	i	z_g	z_t	$F_{rad,max}$		$P_{N, min}$	$P_{N, max}$
							± 20 %		
[r/min]	[Nm]	[kW]				[N]	[arcmin]	[kW]	[kW]
33.0	210	0.77	43.390	105	4556	4120	17	0.18	0.75
30.0	210	0.69	48.571	7	340	4240	16	0.12	0.75
26.0	210	0.60	55.529	882	48977	4350	17	0.12	0.75
23.0	210	0.52	62.160	294	18275	4470	16	0.12	0.55
20.0	210	0.46	71.026	882	62645	4620	17	0.12	0.55
18.0	210	0.41	79.507	294	23375	4740	16	0.12	0.37
15.0	210	0.35	92.205	210	19363	4800	17	0.12	0.37
14.0	210	0.32	103.214	14	1445	4800	16	0.12	0.37
12.0	210	0.27	118.162	588	69479	4800	17	0.12	0.25
10.0	210	0.24	132.270	196	25925	4800	16	0.12	0.25
9.00	210	0.21	152.853	231	35309	4800	17	0.12	0.25
8.00	210	0.18	171.104	77	13175	4800	16	0.12	0.18
7.00	210	0.16	198.873	63	12529	4800	17	0.12	0.18
6.00	210	0.15	222.619	21	4675	4800	16	0.12	0.12
6.00	210	0.13	257.631	84	21641	4800	17	0.12	0.12
5.00	210	0.11	288.393	28	8075	4800	16	0.12	0.12

Technical data at a glance

g500-H320, 2-stage gearboxes

Output speed	Max. output torque	Max. drive power	Ratio	Number of teeth		Max. radial force	Backlash	Rated power	
							Standard	Motor	
n_2	$M_{2, max}$	$P_{1, max}$	i	z_g	z_t	$F_{rad,max}$		$P_{N, min}$	$P_{N, max}$
							± 20 %		
[r/min]	[Nm]	[kW]				[N]	[arcmin]	[kW]	[kW]
429	165	7.65	3.389	18	61	2180	20	0.55	4.00
313	189	6.38	4.648	105	488	2460	20	1.10	4.00
239	227	5.86	6.083	12	73	2670	16	0.55	4.00
210	218	4.95	6.910	78	539	2800	15	0.55	4.00
174	249	4.69	8.343	35	292	2950	16	1.10	4.00
153	238	3.94	9.477	65	616	3100	15	1.10	4.00
136	265	3.89	10.677	294	3139	3250	16	0.55	4.00
124	271	3.64	11.680	25	292	3330	16	0.25	4.00
120	254	3.28	12.128	39	473	3360	15	0.55	4.00
109	262	3.09	13.268	325	4312	3440	15	0.25	3.00
97.0	294	3.08	14.898	49	730	3600	15	0.25	3.00
86.0	281	2.60	16.923	13	220	3760	15	0.25	3.00
79.0	313	2.68	18.250	4	73	3870	15	0.55	3.00
70.0	299	2.26	20.731	26	539	4020	15	0.55	2.20
61.0	320	2.10	23.754	126	2993	4210	15	0.25	1.50
53.0	320	1.84	26.983	117	3157	4420	15	0.25	1.50
49.0	320	1.69	29.548	42	1241	4540	15	0.25	1.50
43.0	320	1.49	33.564	39	1309	4750	15	0.25	1.50
38.0	251	1.03	38.238	21	803	4970	15	0.12	0.75
33.0	285	1.03	43.436	39	1694	5190	14	0.12	0.75
30.0	218	0.71	46.407	140	6497	5310	15	0.12	0.55
27.0	248	0.71	52.715	130	6853	5550	14	0.12	0.55

Technical data at a glance

g500-H320, 3-stage gearboxes

Output speed	Max. output torque	Max. drive power	Ratio	Number of teeth		Max. radial force	Backlash	Rated power	
							Standard	Motor	
n_2	$M_{2, max}$	$P_{1, max}$	i	z_g	z_t	$F_{rad,max}$		$P_{N, min}$	$P_{N, max}$
							± 20 %		
[r/min]	[Nm]	[kW]				[N]	[arcmin]	[kW]	[kW]
31.0	320	1.08	47.276	105	4964	5350	15	0.18	0.75
27.0	320	0.95	53.703	195	10472	5570	15	0.18	0.75
24.0	320	0.84	60.502	882	53363	5600	15	0.18	0.75
21.0	320	0.74	68.726	117	8041	5670	15	0.18	0.75
19.0	320	0.66	77.387	882	68255	5680	15	0.12	0.75
16.0	320	0.56	87.906	117	10285	5700	15	0.12	0.55
14.0	320	0.49	100.462	210	21097	5700	15	0.12	0.55
12.0	320	0.43	114.118	195	22253	5700	15	0.12	0.37
11.0	320	0.39	128.743	588	75701	5700	15	0.12	0.37
10.0	320	0.34	146.244	78	11407	5700	15	0.12	0.37
8.00	320	0.30	166.541	231	38471	5700	15	0.12	0.37
6.00	315	0.22	216.683	63	13651	5700	15	0.12	0.25
6.00	320	0.19	246.137	117	28798	5700	14	0.12	0.18
5.00	269	0.15	280.702	84	23579	5700	15	0.12	0.12
4.00	305	0.15	318.859	78	24871	5700	14	0.12	0.12

Technical data at a glance

g500-H450, 2-stage gearboxes

Output speed	Max. output torque	Max. drive power	Ratio	Number of teeth		Max. radial force	Backlash	Rated power	
							Standard	Motor	
n_2	$M_{2, max}$	$P_{1, max}$	i	z_g	z_t	$F_{rad,max}$		$P_{N, min}$	$P_{N, max}$
							± 20 %		
[r/min]	[Nm]	[kW]				[N]	[arcmin]	[kW]	[kW]
429	256	11.8	3.444	9	31	2550	19	2.20	7.50
313	293	9.89	4.724	105	496	2850	18	2.20	7.50
260	315	8.85	5.678	90	511	3010	15	2.20	7.50
244	323	8.52	6.045	441	2666	3070	17	1.10	7.50
223	334	8.05	6.613	75	496	3160	17	1.10	7.50
190	354	7.25	7.787	75	584	3350	14	2.20	7.50
168	370	6.69	8.800	5	44	3470	14	2.20	7.50
148	385	6.15	9.965	315	3139	3650	14	1.10	7.50
130	400	5.59	11.262	42	473	3800	14	1.10	5.50
118	411	5.26	12.320	25	308	3900	13	1.10	5.50
105	426	4.83	13.905	21	292	4030	14	0.55	5.50
93.0	441	4.42	15.714	7	110	4240	13	0.55	5.50
85.0	450	4.14	17.033	30	511	4360	14	1.10	4.00
76.0	448	3.65	19.250	4	77	4520	13	1.10	4.00
65.0	450	3.18	22.170	135	2993	4720	14	0.55	3.00
58.0	450	2.81	25.056	18	451	4920	13	0.55	3.00
52.0	450	2.55	27.578	45	1241	5090	13	0.55	3.00
47.0	450	2.26	31.167	6	187	5280	13	0.55	2.20
40.0	450	1.96	35.689	45	1606	5490	13	0.25	1.50
36.0	450	1.74	40.333	3	121	5880	13	0.25	1.50
33.0	322	1.16	43.313	150	6497	6000	13	0.25	1.10
30.0	366	1.16	48.950	20	979	6300	13	0.25	1.10
26.0	270	0.75	54.750	4	219	6500	13	0.25	0.55
23.0	305	0.75	61.875	8	495	6700	13	0.25	0.55

Technical data at a glance

g500-H450, 3-stage gearboxes

Output speed	Max. output torque	Max. drive power	Ratio	Number of teeth		Max. radial force	Backlash	Rated power	
							Standard	Motor	
n_2	$M_{2, max}$	$P_{1, max}$	i	z_g	z_t	$F_{rad,max}$		$P_{N, min}$	$P_{N, max}$
							± 20 %		
[r/min]	[Nm]	[kW]				[N]	[arcmin]	[kW]	[kW]
33.0	450	1.61	44.124	225	9928	6050	14	0.25	1.50
29.0	450	1.43	49.867	15	748	6320	13	0.25	1.50
26.0	450	1.26	56.469	945	53363	6550	14	0.25	1.50
23.0	450	1.15	61.774	1125	69496	6700	14	0.18	1.10
21.0	450	1.02	69.813	75	5236	6860	13	0.18	1.10
18.0	450	0.90	78.794	63	4964	7000	14	0.18	1.10
16.0	450	0.80	89.048	21	1870	7100	13	0.18	0.75
15.0	450	0.74	96.522	90	8687	7100	14	0.25	0.75
13.0	450	0.66	109.083	12	1309	7100	13	0.25	0.75
12.0	450	0.57	121.342	225	27302	7100	14	0.12	0.55
10.0	450	0.50	137.133	15	2057	7100	13	0.12	0.55
9.00	450	0.44	156.274	135	21097	7100	14	0.12	0.55
8.00	450	0.39	176.611	18	3179	7100	13	0.12	0.37
7.00	450	0.35	198.059	495	98039	7100	14	0.12	0.37
6.00	450	0.31	223.833	6	1343	7100	13	0.12	0.37
6.00	450	0.27	248.200	5	1241	7100	14	0.12	0.25
5.00	450	0.24	280.500	2	561	7100	13	0.12	0.25
4.00	428	0.20	326.994	315	103003	7100	14	0.12	0.18
4.00	450	0.18	369.548	42	15521	7100	13	0.12	0.18

Technical data at a glance

g500-H600, 2-stage gearboxes

Output speed	Max. output torque	Max. drive power	Ratio	Number of teeth		Max. radial force	Backlash	Rated power	
							Standard	Motor	
n_2	$M_{2, max}$	$P_{1, max}$	i	z_g	z_t	$F_{rad,max}$		$P_{N, min}$	$P_{N, max}$
							± 20 %		
[r/min]	[Nm]	[kW]				[N]	[arcmin]	[kW]	[kW]
452	240	11.7	3.267	15	49	4680	17	2.20	7.50
330	297	10.6	4.480	25	112	5080	15	2.20	7.50
258	339	9.42	5.733	15	86	5420	15	1.10	7.50
229	404	9.97	6.456	90	581	5600	14	2.20	7.50
204	435	9.56	7.250	4	29	5770	13	2.20	7.50
167	487	8.77	8.853	75	664	6080	13	2.20	7.50
148	510	8.17	9.943	35	348	6270	12	2.20	7.50
130	537	7.55	11.330	315	3569	6490	13	1.10	7.50
119	553	7.12	12.395	375	4648	6640	12	1.10	7.50
106	578	6.62	13.920	25	348	6850	12	1.10	7.50
93.0	600	6.05	15.810	21	332	7080	12	0.55	7.50
82.0	600	5.32	17.755	49	870	7300	12	0.55	5.50
75.0	600	4.88	19.367	30	581	7470	12	1.10	5.50
67.0	600	4.33	21.750	4	87	7700	12	1.10	4.00
58.0	600	3.73	25.207	135	3403	8000	12	0.55	4.00
51.0	600	3.32	28.310	42	1189	8260	12	0.55	4.00
46.0	600	2.99	31.356	45	1411	8480	12	0.55	3.00
41.0	600	2.66	35.214	14	493	8500	12	0.55	3.00
36.0	558	2.14	40.578	45	1826	8500	12	0.25	1.50
32.0	600	2.05	45.571	7	319	8500	12	0.25	1.50
29.0	456	1.44	49.247	150	7387	8500	12	0.25	1.10
26.0	513	1.44	55.307	140	7743	8500	12	0.25	1.10
23.0	307	0.75	62.250	4	249	8500	12	0.25	0.55
20.0	345	0.75	69.911	56	3915	8500	11	0.25	0.55

Technical data at a glance

g500-H600, 3-stage gearboxes

Output speed	Max. output torque	Max. drive power	Ratio	Number of teeth		Max. radial force	Backlash	Rated power	
							Standard	Motor	
n_2	$M_{2, max}$	$P_{1, max}$	i	z_g	z_t	$F_{rad,max}$		$P_{N, min}$	$P_{N, max}$
							± 20 %		
[r/min]	[Nm]	[kW]				[N]	[arcmin]	[kW]	[kW]
46.0	600	3.05	31.197	1575	49136	8470	13	1.10	3.00
41.0	600	2.72	35.037	245	8584	8500	13	1.10	3.00
36.0	600	2.39	39.925	6615	264106	8500	13	0.55	2.20
33.0	600	2.18	43.676	1125	49136	8500	13	0.25	2.20
30.0	600	1.95	49.051	175	8584	8500	12	0.25	2.20
26.0	600	1.70	55.710	441	24568	8500	13	0.25	1.50
23.0	600	1.51	62.566	343	21460	8500	12	0.25	1.50
21.0	600	1.39	68.244	45	3071	8500	13	0.55	1.50
19.0	600	1.24	76.643	14	1073	8500	12	0.55	1.50
16.0	600	1.07	88.826	2835	251822	8500	13	0.25	1.10
14.0	600	0.95	99.757	441	43993	8500	12	0.25	1.10
13.0	600	0.86	110.491	945	104414	8500	13	0.25	0.75
12.0	600	0.77	124.088	147	18241	8500	12	0.25	0.75
10.0	600	0.66	142.988	945	135124	8500	13	0.12	0.75
9.00	600	0.57	160.585	147	23606	8500	12	0.12	0.55
8.00	600	0.53	173.536	1575	273319	8500	13	0.12	0.55
7.00	600	0.47	194.892	490	95497	8500	12	0.12	0.55
6.00	600	0.42	221.794	180	39923	8500	13	0.12	0.37
6.00	600	0.37	249.089	56	13949	8500	12	0.12	0.37

Technical data at a glance

g500-H850, 2-stage gearboxes

Output speed	Max. output torque	Max. drive power	Ratio	Number of teeth		Max. radial force	Backlash	Rated power	
							Standard	Motor	
n_2	$M_{2, max}$	$P_{1, max}$	i	z_g	z_t	$F_{rad,max}$		$P_{N, min}$	$P_{N, max}$
							± 20 %		
[r/min]	[Nm]	[kW]				[N]	[arcmin]	[kW]	[kW]
469	306	15.5	3.147	551	1734	5070	16	4.00	7.50
339	379	13.8	4.362	152	663	5610	15	4.00	7.50
275	430	12.8	5.368	19	102	5980	14	2.20	7.50
248	551	14.8	5.946	203	1207	6170	13	4.00	7.50
222	578	13.9	6.644	87	578	6390	13	4.00	7.50
179	615	11.9	8.241	112	923	6830	13	4.00	7.50
160	649	11.2	9.208	24	221	7070	12	4.00	7.50
146	667	10.5	10.143	7	71	7280	12	2.20	7.50
130	696	9.77	11.360	25	284	7550	12	2.20	7.50
116	725	9.10	12.693	75	952	7810	12	2.20	7.50
102	758	8.34	14.490	49	710	8140	12	1.10	7.50
91.0	792	7.79	16.190	21	340	8420	12	1.10	7.50
83.0	814	7.31	17.750	4	71	8660	12	2.20	7.50
74.0	833	6.70	19.833	6	119	8970	12	2.20	7.50
63.0	850	5.80	23.103	126	2911	9400	12	1.10	5.50
57.0	850	5.19	25.815	27	697	9730	11	1.10	5.50
51.0	850	4.71	28.315	168	4757	10000	11	1.10	4.00
46.0	850	4.21	31.639	36	1139	10400	11	1.10	4.00
39.0	850	3.58	37.190	21	781	10900	11	0.55	3.00
35.0	850	3.20	41.556	9	374	11000	11	0.55	3.00
32.0	850	2.95	45.136	140	6319	11000	11	0.55	2.20
29.0	850	2.64	50.433	30	1513	11000	11	0.55	2.20

Technical data at a glance

g500-H850, 3-stage gearboxes

Output speed	Max. output torque	Max. drive power	Ratio	Number of teeth		Max. radial force	Backlash	Rated power	
							Standard	Motor	
n_2	$M_{2, max}$	$P_{1, max}$	i	z_g	z_t	$F_{rad,max}$		$P_{N, min}$	$P_{N, max}$
							± 20 %		
[r/min]	[Nm]	[kW]				[N]	[arcmin]	[kW]	[kW]
49.0	850	4.60	29.536	125	3692	10100	13	2.20	5.50
44.0	850	4.10	33.003	375	12376	10500	12	2.20	4.00
38.0	850	3.58	37.799	1050	39689	10900	13	1.10	4.00
35.0	850	3.27	41.350	625	25844	11000	13	1.10	4.00
31.0	850	2.92	46.204	1875	86632	11000	12	1.10	3.00
28.0	850	2.56	52.743	35	1846	11000	13	0.55	3.00
25.0	850	2.29	58.933	15	884	11000	12	0.55	2.20
22.0	850	2.10	64.610	100	6461	11000	13	1.10	2.20
20.0	850	1.87	72.193	150	10829	11000	12	1.10	2.20
17.0	850	1.59	84.096	450	37843	11000	13	0.55	1.50
15.0	850	1.43	93.966	675	63427	11000	12	0.55	1.50
14.0	850	1.29	104.607	150	15691	11000	12	0.55	1.50
12.0	850	1.15	116.884	225	26299	11000	12	0.55	1.10
11.0	850	1.00	135.373	75	10153	11000	12	0.25	1.10
10.0	850	0.88	151.262	225	34034	11000	12	0.25	1.10
9.00	850	0.82	164.294	500	82147	11000	12	0.25	0.75
8.00	850	0.74	183.577	750	137683	11000	12	0.25	0.75
7.00	850	0.63	207.675	40	8307	11000	12	0.25	0.55
6.00	850	0.57	232.050	20	4641	11000	12	0.25	0.55

Technical data at a glance

g500-H1500, 2-stage gearboxes

Output speed	Max. output torque	Max. drive power	Ratio	Number of teeth		Max. radial force	Backlash	Rated power	
							Standard	Motor	
n_2	$M_{2, max}$	$P_{1, max}$	i	z_g	z_t	$F_{rad,max}$		$P_{N, min}$	$P_{N, max}$
							± 20 %		
[r/min]	[Nm]	[kW]				[N]	[arcmin]	[kW]	[kW]
395	775	33.0	3.743	440	1647	8500	14	5.50	30.00
311	924	31.0	4.758	500	2379	8900	13	5.50	30.00
274	1021	30.2	5.400	5	27	9200	11	5.50	30.00
237	1098	28.1	6.245	420	2623	9440	13	4.00	30.00
215	1157	26.9	6.864	125	858	9690	11	5.50	30.00
195	1217	25.6	7.592	125	949	9970	10	5.50	30.00
164	1320	23.4	9.010	105	946	10500	10	4.00	22.00
144	1380	21.5	10.267	15	154	10900	10	4.00	22.00
130	1400	19.7	11.356	45	511	11200	10	4.00	22.00
120	1420	18.4	12.362	105	1298	11400	10	2.20	22.00
108	1430	16.8	13.673	315	4307	11800	10	2.20	18.50
98.0	1440	15.2	15.156	45	682	12100	10	4.00	18.50
88.0	1450	13.7	16.763	135	2263	12500	10	4.00	15.00
72.0	1500	11.6	20.533	15	308	13200	10	2.20	7.50
65.0	1500	10.5	22.711	45	1022	13600	10	2.20	7.50
59.0	1500	9.58	24.933	15	374	13900	10	2.20	7.50
54.0	1500	8.68	27.578	45	1241	14300	9	2.20	7.50
45.0	1440	7.00	32.267	15	484	15000	10	1.10	4.00
41.0	1500	6.59	35.689	45	1606	15400	9	1.10	4.00
37.0	1463	5.86	39.160	25	979	15800	10	1.10	4.00
34.0	1500	5.42	43.313	150	6497	16300	9	1.10	4.00
29.0	1250	3.95	49.500	2	99	16900	10	1.10	2.20
26.0	1382	3.95	54.750	4	219	17000	9	1.10	2.20

Technical data at a glance

g500-H1500, 3-stage gearboxes

Output speed	Max. output torque	Max. drive power	Ratio	Number of teeth		Max. radial force	Backlash	Rated power	
							Standard	Motor	
n_2	$M_{2, max}$	$P_{1, max}$	i	z_g	z_t	$F_{rad,max}$		$P_{N, min}$	$P_{N, max}$
							± 20 %		
[r/min]	[Nm]	[kW]				[N]	[arcmin]	[kW]	[kW]
36.0	1500	5.92	40.517	60	2431	16000	11	4.00	5.50
33.0	1500	5.36	44.814	360	16133	16400	10	4.00	5.50
29.0	1500	4.82	49.867	15	748	17000	10	2.20	5.50
26.0	1500	4.27	55.851	375	20944	17000	10	2.20	4.00
24.0	1500	3.86	61.774	1125	69496	17000	10	2.20	4.00
20.0	1500	3.35	71.238	21	1496	17000	10	1.10	4.00
18.0	1500	3.02	78.794	63	4964	17000	10	1.10	3.00
17.0	1500	2.73	87.267	15	1309	17000	10	2.20	3.00
15.0	1500	2.47	96.522	90	8687	17000	10	2.20	3.00
13.0	1500	2.10	113.585	135	15334	17000	10	1.10	2.20
12.0	1500	1.91	125.632	405	50881	17000	10	1.10	2.20
10.0	1500	1.71	139.211	90	12529	17000	10	1.10	1.50
9.00	1500	1.55	153.976	540	83147	17000	10	1.10	1.50
8.00	1500	1.30	182.844	45	8228	17000	10	0.55	1.50
7.00	1500	1.17	202.237	135	27302	17000	10	0.55	1.10
6.00	1500	1.07	221.907	75	16643	17000	10	0.55	1.10
6.00	1500	0.97	245.442	450	110449	17000	10	0.55	1.10
5.00	1500	0.85	280.500	2	561	17000	10	0.55	0.75
5.00	1500	0.77	310.250	4	1241	17000	10	0.55	0.75

Technical data at a glance

g500-H3000, 2-stage gearboxes

Output speed	Max. output torque	Max. drive power	Ratio	Number of teeth		Max. radial force	Backlash	Rated power	
							Standard	Motor	
n_2	$M_{2, max}$	$P_{1, max}$	i	z_g	z_t	$F_{rad,max}$		$P_{N, min}$	$P_{N, max}$
							± 20 %		
[r/min]	[Nm]	[kW]				[N]	[arcmin]	[kW]	[kW]
329	1360	48.3	4.496	425	1911	9600	12	11.00	30.00
250	1610	43.5	5.902	51	301	10200	12	11.00	30.00
233	1910	48.0	6.344	125	793	10500	10	11.00	30.00
212	2025	46.4	6.968	125	871	11000	9	11.00	30.00
178	2155	41.3	8.327	315	2623	11400	9	11.00	30.00
162	2225	38.8	9.146	315	2881	11600	9	11.00	30.00
148	2300	36.7	10.005	375	3752	12000	9	7.50	30.00
127	2400	33.0	11.619	21	244	12600	9	4.00	30.00
116	2475	30.9	12.762	21	268	13000	9	4.00	30.00
104	2530	28.4	14.233	30	427	13400	9	5.50	22.00
95.0	2610	26.7	15.633	30	469	13800	9	5.50	22.00
79.0	2750	23.4	18.752	270	5063	14600	9	4.00	22.00
72.0	2815	21.9	20.596	270	5561	15100	9	4.00	22.00
64.0	2900	20.1	23.044	45	1037	15600	9	4.00	22.00
58.0	2965	18.7	25.311	45	1139	16000	8	4.00	22.00
50.0	3000	16.0	29.822	45	1342	16900	9	2.20	7.50
45.0	3000	14.6	32.756	45	1474	17400	8	2.20	7.50
41.0	3000	13.2	36.193	150	5429	17900	9	2.20	7.50
37.0	3000	12.1	39.753	150	5963	18500	8	2.20	7.50
32.0	1712	5.88	45.750	4	183	19300	9	2.20	4.00
29.0	1880	5.87	50.250	4	201	19800	8	2.20	4.00

Technical data at a glance

g500-H3000, 3-stage gearboxes

Output speed	Max. output torque	Max. drive power	Ratio	Number of teeth		Max. radial force	Backlash	Rated power	
							Standard	Motor	
n_2	$M_{2, max}$	$P_{1, max}$	i	z_g	z_t	$F_{rad,max}$		$P_{N, min}$	$P_{N, max}$
							± 20 %		
[r/min]	[Nm]	[kW]				[N]	[arcmin]	[kW]	[kW]
31.0	2830	9.71	47.186	945	44591	19500	9	4.00	11.00
28.0	2910	9.09	51.828	945	48977	20000	9	4.00	11.00
28.0	2950	8.89	53.770	135	7259	20000	9	4.00	11.00
25.0	3000	8.22	59.059	135	7973	20000	9	4.00	7.50
23.0	3000	7.50	64.744	945	61183	20000	9	2.20	7.50
21.0	3000	6.84	71.112	945	67201	20000	9	2.20	7.50
19.0	3000	6.11	79.375	405	32147	20000	9	4.00	7.50
17.0	3000	5.49	87.183	405	35309	20000	9	4.00	5.50
14.0	3000	4.47	107.541	135	14518	20000	9	2.20	5.50
12.0	3000	4.04	118.119	135	15946	20000	9	2.20	4.00
11.0	3000	3.65	130.585	135	17629	20000	9	2.20	4.00
10.0	3000	3.32	143.430	135	19363	20000	9	2.20	4.00
9.00	3000	2.83	168.993	135	22814	20000	9	1.10	3.00
8.00	3000	2.56	185.615	135	25058	20000	9	1.10	3.00
7.00	3000	2.33	205.096	450	92293	20000	9	1.10	2.20
6.00	3000	2.10	225.269	450	101371	20000	9	1.10	2.20
6.00	3000	1.84	259.250	4	1037	20000	9	1.10	2.20
5.00	3000	1.68	284.750	4	1139	20000	9	1.10	1.50

Technical data at a glance

g500-H5000, 2-stage gearboxes

Output speed	Max. output torque	Max. drive power	Ratio	Number of teeth		Max. radial force	Backlash	Rated power	
							Standard	Motor	
n_2	$M_{2, max}$	$P_{1, max}$	i	z_g	z_t	$F_{rad,max}$		$P_{N, min}$	$P_{N, max}$
							± 20 %		
[r/min]	[Nm]	[kW]				[N]	[arcmin]	[kW]	[kW]
306	3270	108	4.846	13	63	10500	10	18.50	55.00
251	3610	97.7	5.911	437	2583	11000	10	18.50	55.00
218	3630	85.5	6.789	19	129	11500	10	15.00	55.00
198	3630	77.5	7.497	437	3276	12000	10	15.00	55.00
174	3640	68.3	8.526	19	162	12500	10	15.00	55.00
159	4660	79.9	9.331	169	1577	13000	7	15.00	55.00
130	4760	66.9	11.381	299	3403	14000	7	15.00	55.00
113	4850	59.4	13.073	273	3569	15500	7	11.00	55.00
103	4940	54.8	14.435	23	332	16400	7	11.00	55.00
90.0	5000	48.7	16.418	91	1494	18200	7	11.00	55.00
80.0	5000	42.9	18.599	299	5561	19500	7	7.50	45.00
70.0	5000	38.1	20.978	91	1909	20600	7	7.50	45.00
63.0	5000	33.9	23.410	39	913	21600	7	7.50	30.00
56.0	5000	30.2	26.305	325	8549	22600	7	5.50	22.00
50.0	5000	26.8	29.702	299	8881	23800	7	5.50	15.00
44.0	5000	23.8	33.519	52	1743	25000	7	4.00	15.00
40.0	5000	21.4	37.147	143	5312	26000	7	4.00	15.00
35.0	5000	19.1	41.819	260	10873	27000	7	4.00	15.00
31.0	5000	16.9	47.175	234	11039	27000	7	3.00	15.00
29.0	5000	15.8	50.326	221	11122	27000	7	3.00	15.00
28.0	5000	14.9	53.471	104	5561	27000	7	3.00	15.00
24.0	5000	12.7	62.478	182	11371	27000	7	2.20	15.00

Technical data at a glance

g500-H5000, 3-stage gearboxes

Output speed	Max. output torque	Max. drive power	Ratio	Number of teeth		Max. radial force	Backlash	Rated power	
							Standard	Motor	
n_2	$M_{2, max}$	$P_{1, max}$	i	z_g	z_t	$F_{rad,max}$		$P_{N, min}$	$P_{N, max}$
							± 20 %		
[r/min]	[Nm]	[kW]				[N]	[arcmin]	[kW]	[kW]
24.0	5000	12.9	62.664	351	21995	27000	7	2.20	15.00
22.0	5000	11.8	68.658	897	61586	27000	7	2.20	11.00
19.0	5000	10.2	78.777	2457	193556	27000	7	2.20	11.00
16.0	5000	8.98	89.909	2691	241945	27000	7	2.20	11.00
14.0	5000	7.89	102.053	819	83581	27000	7	2.20	7.50
13.0	5000	7.01	114.361	2808	321127	27000	7	2.20	7.50
11.0	5000	6.13	130.842	975	127571	27000	7	1.50	7.50
10.0	5000	5.53	145.489	2691	391511	27000	7	1.50	5.50
9.00	5000	4.82	167.626	2808	470693	27000	7	1.50	5.50
8.00	5000	4.27	186.282	2574	479491	27000	7	1.50	4.00
7.00	5000	3.83	208.671	780	162763	27000	7	1.50	4.00
6.00	5000	3.40	236.034	2106	497087	27000	7	1.50	4.00
6.00	5000	3.12	254.341	1989	505885	27000	7	1.50	3.00
5.00	5000	2.96	270.238	1872	505885	27000	7	1.50	3.00
5.00	5000	2.52	316.900	819	259541	27000	7	1.50	3.00
4.00	5000	2.36	344.169	1521	523481	27000	7	1.50	2.20
4.00	5000	2.14	372.850	1404	523481	27000	7	1.50	2.20

Technical data at a glance

g500-H8000, 2-stage gearboxes

Output speed	Max. output torque	Max. drive power	Ratio	Number of teeth		Max. radial force	Backlash	Rated power	
							Standard	Motor	
n_2	$M_{2, max}$	$P_{1, max}$	i	z_g	z_t	$F_{rad,max}$		$P_{N, min}$	$P_{N, max}$
							± 20 %		
[r/min]	[Nm]	[kW]				[N]	[arcmin]	[kW]	[kW]
362	4870	191	4.088	725	2964	21500	9	37.00	55.00
283	4870	149	5.229	625	3268	22000	9	30.00	55.00
248	4870	131	5.963	325	1938	22500	9	22.00	55.00
204	4880	107	7.270	115	836	23000	8	18.50	55.00
190	8000	164	7.800	5	39	23500	8	30.00	55.00
149	8000	128	9.976	125	1247	24500	7	22.00	55.00
130	8000	113	11.377	130	1479	25500	7	22.00	55.00
107	8000	92.3	13.870	23	319	28000	7	18.50	55.00
94.0	8000	81.3	15.743	35	551	29500	7	15.00	55.00
86.0	8000	74.6	17.148	115	1972	30500	7	15.00	55.00
77.0	8000	66.2	19.333	3	58	32000	7	11.00	55.00
68.0	8000	58.9	21.687	115	2494	34000	7	11.00	45.00
61.0	8000	52.5	24.305	105	2552	35000	7	11.00	45.00
54.0	8000	46.9	27.067	15	406	37000	7	11.00	30.00
48.0	8000	41.8	30.392	125	3799	38000	7	7.50	22.00
44.0	8000	38.0	33.539	115	3857	40000	7	7.50	15.00
39.0	7550	31.5	38.183	60	2291	42000	7	5.50	15.00
35.0	7660	28.9	42.182	11	464	44000	7	5.50	15.00
31.0	7570	25.7	46.980	50	2349	46000	7	5.50	15.00
28.0	7710	23.2	52.844	45	2378	48000	7	4.00	15.00
26.0	8000	22.5	56.635	85	4814	50000	7	4.00	15.00

Technical data at a glance

g500-H8000, 3-stage gearboxes

Output speed	Max. output torque	Max. drive power	Ratio	Number of teeth		Max. radial force	Backlash	Rated power	
							Standard	Motor	
n_2	$M_{2, max}$	$P_{1, max}$	i	z_g	z_t	$F_{rad,max}$		$P_{N, min}$	$P_{N, max}$
							± 20 %		
[r/min]	[Nm]	[kW]				[N]	[arcmin]	[kW]	[kW]
53.0	8000	46.2	28.128	1430	40223	50000	8	11.00	55.00
43.0	8000	37.8	34.307	2530	86797	50000	8	7.50	45.00
38.0	8000	32.9	39.407	2310	91031	50000	8	5.50	37.00
34.0	8000	29.8	43.511	1265	55042	50000	8	5.50	37.00
30.0	8000	26.3	49.045	910	44631	50000	7	5.50	30.00
25.0	8000	21.6	59.819	1610	96309	50000	7	5.50	22.00
21.0	8000	18.8	68.712	490	33669	50000	7	4.00	22.00
19.0	8000	17.0	75.868	805	61074	50000	7	3.00	18.50
17.0	8000	14.9	86.290	245	21141	50000	7	3.00	18.50
15.0	8000	13.2	97.753	1610	157383	50000	7	2.20	15.00
13.0	8000	11.7	110.259	490	54027	50000	7	2.20	11.00
12.0	8000	10.5	123.043	70	8613	50000	7	2.20	11.00
11.0	8000	9.38	138.255	1750	241947	50000	7	2.20	11.00
9.00	8000	8.24	156.114	1610	251343	50000	7	2.20	7.50
8.00	8000	7.27	176.175	40	7047	50000	7	2.20	7.50
8.00	8000	6.57	195.242	385	75168	50000	7	2.20	7.50
7.00	8000	5.87	219.799	1400	307719	50000	7	2.20	5.50
6.00	8000	5.17	247.950	20	4959	50000	7	2.20	5.50
6.00	8000	4.91	264.509	595	157383	50000	7	2.20	5.50
5.00	8000	4.56	281.041	560	157383	50000	7	2.20	5.50
4.00	8000	3.86	328.381	980	321813	50000	7	2.20	4.00

Technical data at a glance

g500-H14000, 2-stage gearboxes

Output speed	Max. output torque	Max. drive power	Ratio	Number of teeth		Max. radial force	Backlash	Rated power	
							Standard	Motor	
n_2	$M_{2, max}$	$P_{1, max}$	i	z_g	z_t	$F_{rad,max}$		$P_{N, min}$	$P_{N, max}$
							± 20 %		
[r/min]	[Nm]	[kW]				[N]	[arcmin]	[kW]	[kW]
317	7820	267	4.678	667	3120	40000	8	45.00	55.00
252	7900	215	5.877	667	3920	41000	8	37.00	55.00
201	7960	173	7.374	115	848	42000	8	30.00	55.00
186	13800	277	7.979	145	1157	42500	7	55.00	55.00
148	13900	222	10.025	435	4361	44000	7	37.00	55.00
118	13900	177	12.579	375	4717	47000	6	30.00	55.00
105	14000	158	14.149	195	2759	50000	6	30.00	55.00
87.0	14000	131	17.026	115	1958	53000	6	22.00	55.00
78.0	14000	118	18.930	315	5963	56000	6	22.00	55.00
71.0	14000	107	20.896	115	2403	58000	6	18.50	55.00
63.0	14000	95.5	23.451	315	7387	60200	6	18.50	55.00
56.0	14000	84.0	26.571	345	9167	63000	6	15.00	45.00
50.0	14000	76.0	29.384	315	9256	65500	6	15.00	45.00
45.0	14000	67.6	32.881	360	11837	68300	6	15.00	30.00
40.0	12100	52.5	36.549	375	13706	70100	6	11.00	22.00

Technical data at a glance

g500-H14000, 3-stage gearboxes

Output speed	Max. output torque	Max. drive power	Ratio	Number of teeth		Max. radial force	Backlash	Rated power	
							Standard	Motor	
n_2	$M_{2, max}$	$P_{1, max}$	i	z_g	z_t	$F_{rad,max}$		$P_{N, min}$	$P_{N, max}$
							± 20 %		
[r/min]	[Nm]	[kW]				[N]	[arcmin]	[kW]	[kW]
52.0	14000	80.0	28.406	3625	102973	70100	7	15.00	55.00
41.0	14000	62.6	36.331	9375	340603	70100	7	11.00	55.00
36.0	14000	54.9	41.433	3250	134657	70100	7	11.00	55.00
33.0	14000	50.5	45.060	2465	111072	70100	6	11.00	55.00
26.0	14000	39.3	57.630	2125	122464	70100	6	7.50	45.00
22.0	14000	34.5	65.723	65	4272	70100	6	7.50	37.00
18.0	14000	28.1	80.123	391	31328	70100	6	5.50	30.00
16.0	14000	24.8	90.945	595	54112	70100	6	5.50	30.00
15.0	14000	22.7	99.061	115	11392	70100	6	4.00	22.00
13.0	14000	20.2	111.686	51	5696	70100	6	4.00	22.00
12.0	14000	17.9	125.283	1955	244928	70100	6	4.00	22.00
10.0	14000	16.1	140.406	1785	250624	70100	6	4.00	18.50
9.00	14000	14.4	156.361	255	39872	70100	6	4.00	15.00
8.00	14000	12.9	175.571	2125	373088	70100	6	4.00	15.00
8.00	14000	11.7	193.751	1955	378784	70100	6	4.00	11.00
7.00	14000	10.3	220.580	255	56248	70100	6	4.00	11.00
6.00	14000	9.35	243.679	187	45568	70100	6	4.00	11.00
5.00	14000	8.28	271.398	425	115344	70100	6	4.00	7.50
5.00	14000	7.36	305.276	765	233536	70100	6	4.00	7.50
4.00	14000	6.90	327.175	1445	472768	70100	6	4.00	7.50

Gearbox with mounting flange

The gearboxes with mounting flange are available for mounting the following motors:
- Three-phase AC motor according to IEC 72/DIN 42948 with FT/FF flange mounting
- Three-phase AC motor according to NEMA with C/TC flange mounting
- Servo motors with FT/FF flange mounting according to IEC 72/DIN 42948

Mounting flange for three-phase AC motors

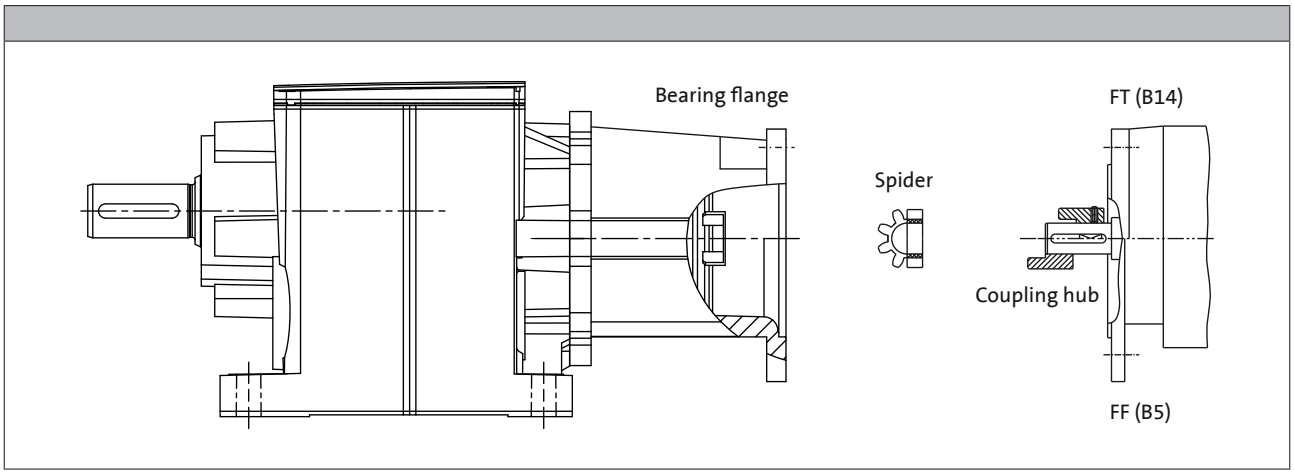

Mounting flange
- For three-phase AC motors according to IEC 72/DIN 42948
- For three-phase AC motors according to NEMA C
- Two-bearing shaft
- Coupling half on the gearbox side integrated in the shaft

Spider (ring gear)
- Torsionally rigid
- Conformal
- Low backlash (with clamping hub / backlash-free clamping ring hub)

31 - Permissible drive power and output torques.

Coupling hub
Standard:
- Coupling hub with keyway for motor shafts according to IEC

Optional coupling hubs for frequent shocks and load alternations or reduced clutch backlash:
- Clamping hub with tangential terminal screw for motor shafts with featherkey, backlash-free
- Clamping ring hub for motor shafts without slot, backlash-free

Gearbox with mounting flange

Mounting flange for three-phase AC motors

► The power information and motor sizes refer to 4-pole IEC standard motors.

Mounting flange for three-phase AC motors according to IEC

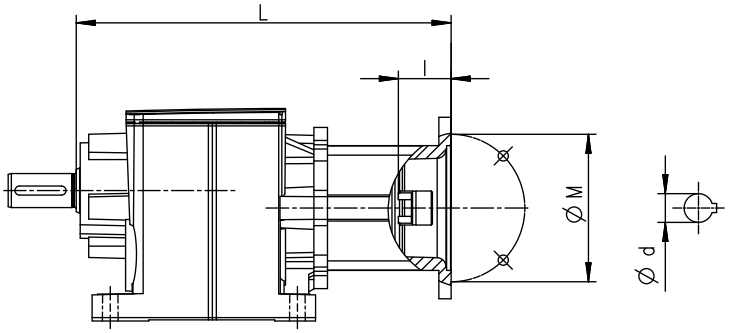

Motor				Bearing flange		Gearbox g500									
	Size					-H45	-H100	-H140	-H210	-H320	-H450	-H600	-H850	-H1500	-H3000
P_1		d	l	M		L									
[kW]		[mm]	[mm]	[mm]		[mm]									
0.12 0.18	63	11	23	FF75	N1A	164	218	231	255	270	285				
					N2B		218	231	255	270	285				
				FF130	N6C [1]		234	248	272	287	285	306	317		
0.25 0.37	71	14	30	FF85	N1B		235	248	272	287	302	323	334	386	
					N3C		235	248	272	287	302	323	334	386	
				FF100	N4C		235	248	272	287	302	323	334	386	
				FF130	N2C		235	248	272	287	302	323	334	386	
0.55 0.75	80	19	40	FF100	N7C		235	248	272	287	302	323	334	386	
				FF130	N1C		235	248	272	287	302	323	334	386	
					N2D		264	277	301	316	331	352	363	415	455
					N3E				301	316	331	352	363	415	
1.1 1.5	90	24	50	FF130	N1D [2]		264	277	301	316	331	352	363	415	455
					N2E				301	316	331	352	363	415	455
					N2F							352	363	415	455
				FF165	N4E				321	336	351	372	383	435	475
					N3F							372	383	435	475
2.2 3.0	100	28	60	FF130	N1E				301	316	331	352	363	415	455
					N1F							352	363	415	455
4.0	112			FF215	N2G							416	427	479	519
5.5 7.5	132	38	80	FF215	N3G							436	447	499	539
				FF265	N1G							436	447	499	539
					N3H									539	579
11.0 15.0	160	42	110	FF300	N1H									569	609
18.5 22.0	180	48	110	FF300	N2H									569	609

[1] Only clamping hub available.
[2] Only standard and clamping hub available.

152 - More gearbox dimensions

Gearbox with mounting flange

Mounting flange for three-phase AC motors

Mounting flange for three-phase AC motors according to NEMA

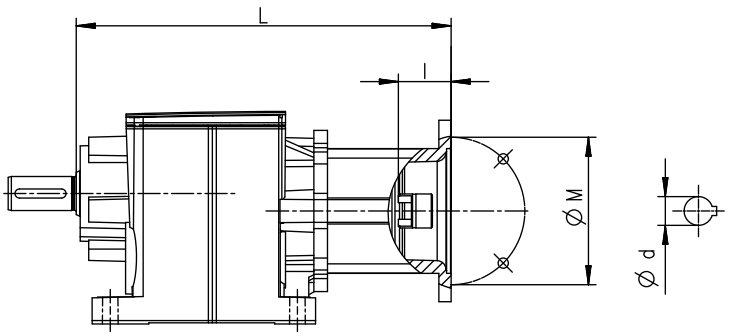

Motor			Bearing flange		Gearbox g500								
Size					-H100	-H140	-H210	-H320	-H450	-H600	-H850	-H1500	-H3000
	d	l	M		L								
	[inch]	[inch]	[inch]		[mm]								
56 C	0.625	1.875	5.875	A5C	250	263	287	302	317	338	349	401	
143/145 TC	0.875	2.250	5.875	A5D	288	301	325	340	355	376	387	439	479
182/184 TC	1.125	2.750	7.252	A5E			343	358	372	394	405	457	497
213/215 TC	1.375	3.375	7.252	A5G						462	473	525	565
254/256 TC	1.625	4.000	7.252	A5H								564	604
284/286 TC	1.875	4.625	9.000	A6H								574	614

152 - More gearbox dimensions

Gearbox with mounting flange

Mounting flange for servo motors

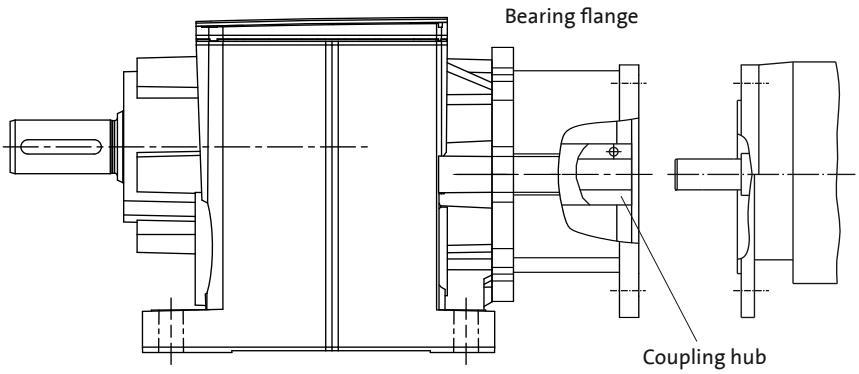

Mounting flange
- Flange dimensions according to IEC 72/DIN 42948
- Drive shaft designed as clamping hub with tangential terminal screw for motor shafts without featherkey, backlash-free
- overall lengths optimised

Gearbox with mounting flange

Mounting flange for servo motors

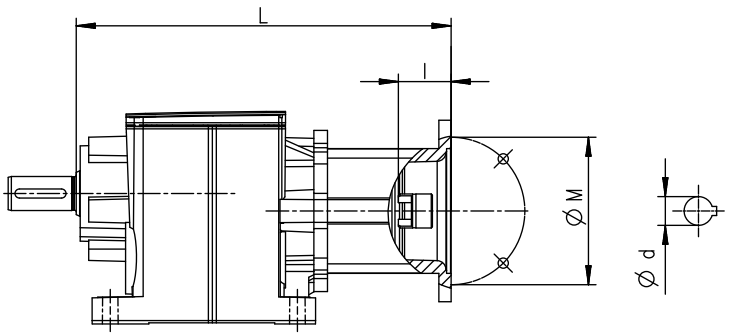

Motor			Bearing flange		Gearbox g500								
					-H100	-H140	-H210	-H320	-H450	-H600	-H850	-H1500	-H3000
M	d	l	M		L								
[mm]	[mm]	[mm]	[mm]		[mm]								
75	11	23	FT75	S2B	174	187	211	226	241	262	273		
	14	30		S3B	174	187	211	226	241	262	273		
100	14	30	FF100	S4C	189	202	226	241	256	277	288	340	
	19	40		S7C	189	202	226	241	256	277	288	340	
	16	40		S8C	189	202	226	241	256	277	288	340	
115	19	50	FF115	S3D	206	219	243	258	273	294	305	357	397
	24	50		S4D	206	219	243	258	273	294	305	357	397
130	19	50	FF130	S2D	206	219	243	258	273	294	305	357	397
	24	50		S1D	206	219	243	258	273	294	305	357	397
	24	60		S2E			243	258	273	294	305	357	397
	28	60		S1E			243	258	273	294	305	357	397
165	24	50	FF165	S4E			243	258	273	294	305	357	397
	32	58		S6E			243	258	273	294	305	357	397
	28	60		S7E			243	258	273	294	305	357	397

152 - More gearbox dimensions

Surface and corrosion protection

For optimum protection of geared motors against ambient conditions, the surface and corrosion protection system (OKS) offers tailor-made solutions.

Various surface coatings combined with other protective measures ensure that the geared motors operate reliably even at high air humidity, in outdoor installations or in the presence of atmospheric impurities. Any colour from the RAL Classic collection can be chosen for the top coat. The geared motors are also available unpainted (no surface and corrosion protection).

Surface and corrosion protection	Applications	Product		
		g500-H45 ... H450 g500-S130 ... S660 g500-B45 ... B450	g500-H600 ... H3000 g500-S950 ... S4500 g500-B600 ... B4300	g500-H5000 ... H14000 g500-S8000 ... S19000 g500-B8000 ... B20000
Without OKS(uncoated) [1]	• Interior installation, no special corrosion protection required • Paint provided by the customer	Standard		
OKS-G (primed)	• Dependent on subsequent top coat applied	Optional	Optional	Optional
OKS-S (small)	• Standard applications • Internal installation in heated buildings • Air humidity up to 90%		Standard	Standard
OKS-M (medium)	• Internal installation in non-heated buildings • Covered, protected external installation • Air humidity up to 95%		Optional	Optional
OKS-L (large)	• External installation • Air humidity above 95% • Chemical industry plants • Food industry			
OKS-XL (extra Large) [2]	• External installation • Air humidity above 95 % • Chemical industry plants • Food industry • Coastal areas with moderate salinity			

[1] Aluminium parts are uncoated, fan covers are zinc-coated or primed in grey, cast iron parts primed in grey.
Light colour deviations of the components are possible.
[2] On request

Surface and corrosion protection

Structure of surface coating

Surface and corrosion protection	Corrosivity category	Surface coating	Colour	Coating thickness
	DIN EN ISO 12944-2	Structure		
Without OKS(uncoated)		• Dipping primer of the grey iron parts		30 ... 50 µm
OKS-G (primed)		• Dipping primer of the grey iron parts • 2K PUR priming coat		60 ... 90 µm
OKS-S (small)	Comparable to C1	• Dipping primer of the grey iron parts • 2K-PUR top coat	• Standard: RAL 7012 • Optional: RAL Classic	80 ... 120 µm
OKS-M (medium)	Comparable to C2	• Dipping primer of the grey iron parts • 2K PUR priming coat • 2K-PUR top coat		110 ... 160 µm
OKS-L (large)	Comparable to C3			140 ... 200 µm
OKS-XL (extra Large) [1]	Comparable to C4	• Dipping primer of the grey iron parts • 2K-EP priming coat (two times) • 2K-PUR top coat		160 ... 240 µm

[1] On request

Lubricants

Lenze gearboxes and geared motors are ready for operation on delivery and are filled with lubricants specific to both the drive and the design. The mounting position and design specified in the order are key factors in choosing the volume of lubricant.
The amount and type of lubricant contained in the gearbox are given on the nameplate.

The following gearboxes are lubricated for life:
- Helical gearbox g500-H45 ... 140
- Shaft-mounted helical gearbox g500-S130
- Bevel gearbox g500-B45 ... 240

Lubricant table

The following lubricants are recommended:

Mode	CLP 220	CLP 460	CLP HC 220
Ambient temperature [°C]	0 ... +40		-25 ... +50
Specification	Mineral oil with EP additives		Synthetic oil (polyalfaolefins basis)
Changing interval	16000 operating hours After 3 years at the latest Oil temperature 70 °C		25000 operating hours After 4 years at the latest Oil temperature 70 °C
Fuchs	Renolin CLP 220 CLP Plus 220	Renolin CLP 460 CLP Plus 460	Renolin Unisyn CLP 220 XT220
Klüber	Klüberoil GEM 1-220 N	Klüberoil GEM 1-460 N	Klübersynth GEM 4-220 N
Shell	Shell Omala S2 G 220 S2 GX 220	Shell Omala S2 G 460 S2 GX 460	Shell Omala S4 GX HD 220

Mode	CLP HC 320	CLP HC 220 USDA H1	CLP PG 460 USDA H1
Ambient temperature [°C]	-25 ... +50	-20 ... +40	
Specification	Synthetic oil (polyalfaolefins basis)		Synthetic oil (polyglycol basis)
Changing interval	25000 operating hours After 4 years at the latest Oil temperature 70 °C	16000 operating hours After 3 years at the latest Oil temperature 70 °C	
Fuchs	Renolin Unisyn CLP 320 XT 320	Cassida Fluid GL 220	Cassida Fluid WG 460
Klüber	Klübersynth GEM 4-320 N	Klüberoil 4 UH1-220 N	Klüberoil UH1 6-460
Shell	Shell Omala S4 GX HD 320		

► Please contact your Lenze sales office if you are operating at ambient temperatures in areas up to< -20 °C bzw. > or up to +40°C.

Shaft sealing rings

By default, the gearboxes come with NBR shaft sealing rings at the output end. At high speed and unfavourable ambient conditions such as high temperature, reduced circulation of air etc., Lenze recommends the use of FKM (Viton) shaft sealing rings.

Please consider this in your order.

Ventilation

Non-ventilated gearboxes

No ventilation is required for the gearboxes g500-H45 ...H210.

Ventilated gearboxes

From g500-H320 onwards, the gearboxes are supplied with a breather element as standard.

Gearbox in combined mounting position

For reducing the number of versions, the gearboxes can also be ordered in a combined mounting position:

- g500-H45 in mounting position ABCDEF
- g500-H100 ... H450 in mounting position AEF

In these gearboxes, the lubricant amount has been optimised for the use in different mounting positions. If required, the breather elements are loosely enclosed and have to be mounted before commissioning depending on the mounting position.
A gearbox can be used for several mounting positions.

Ventilation

Position of ventilation, sealing elements and oil level check

g500-H210 ... H450

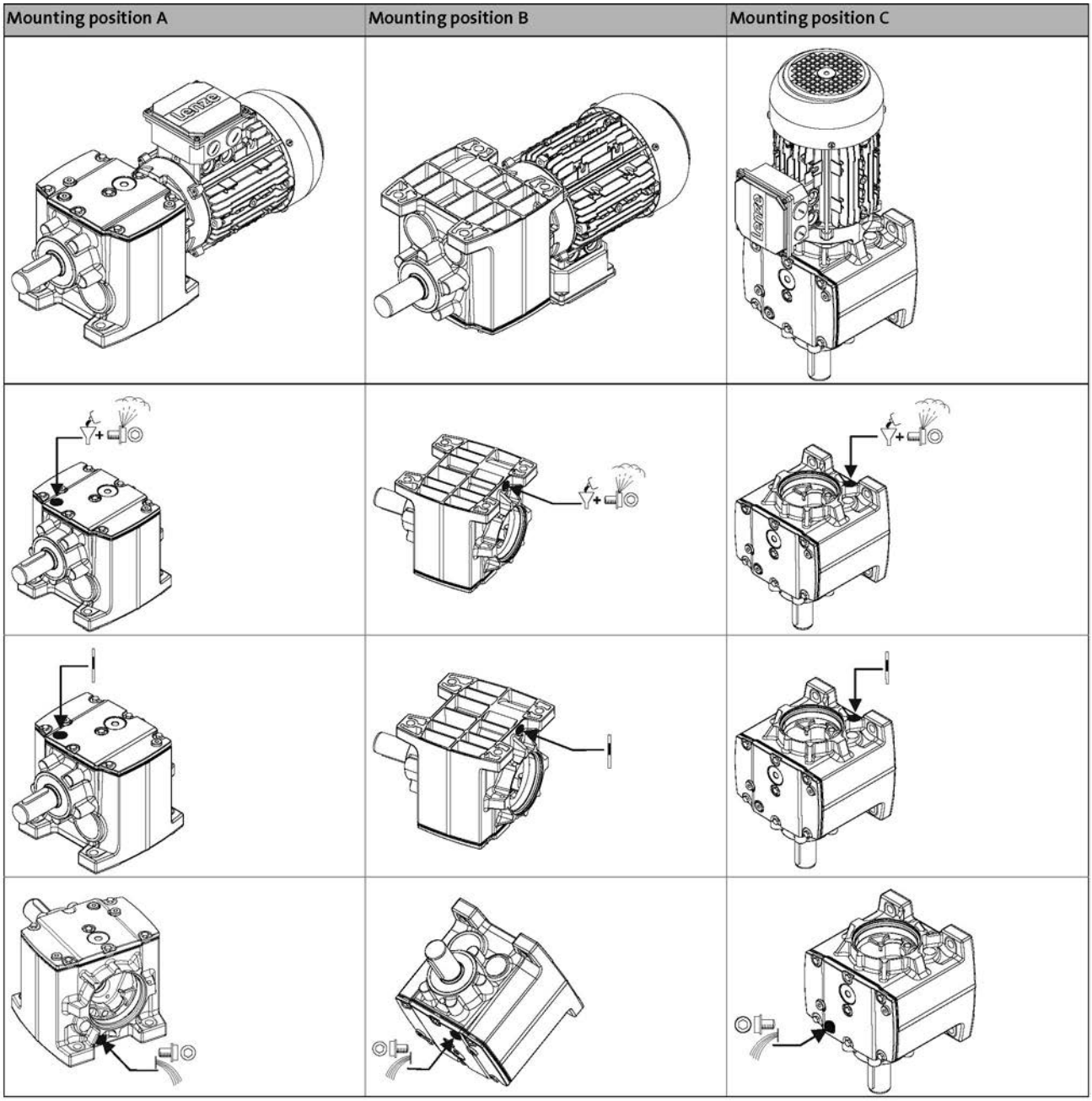

	Filling		Drain
	Breathing		Control

Ventilation

Position of ventilation, sealing elements and oil level check

g500-H210 ... H450

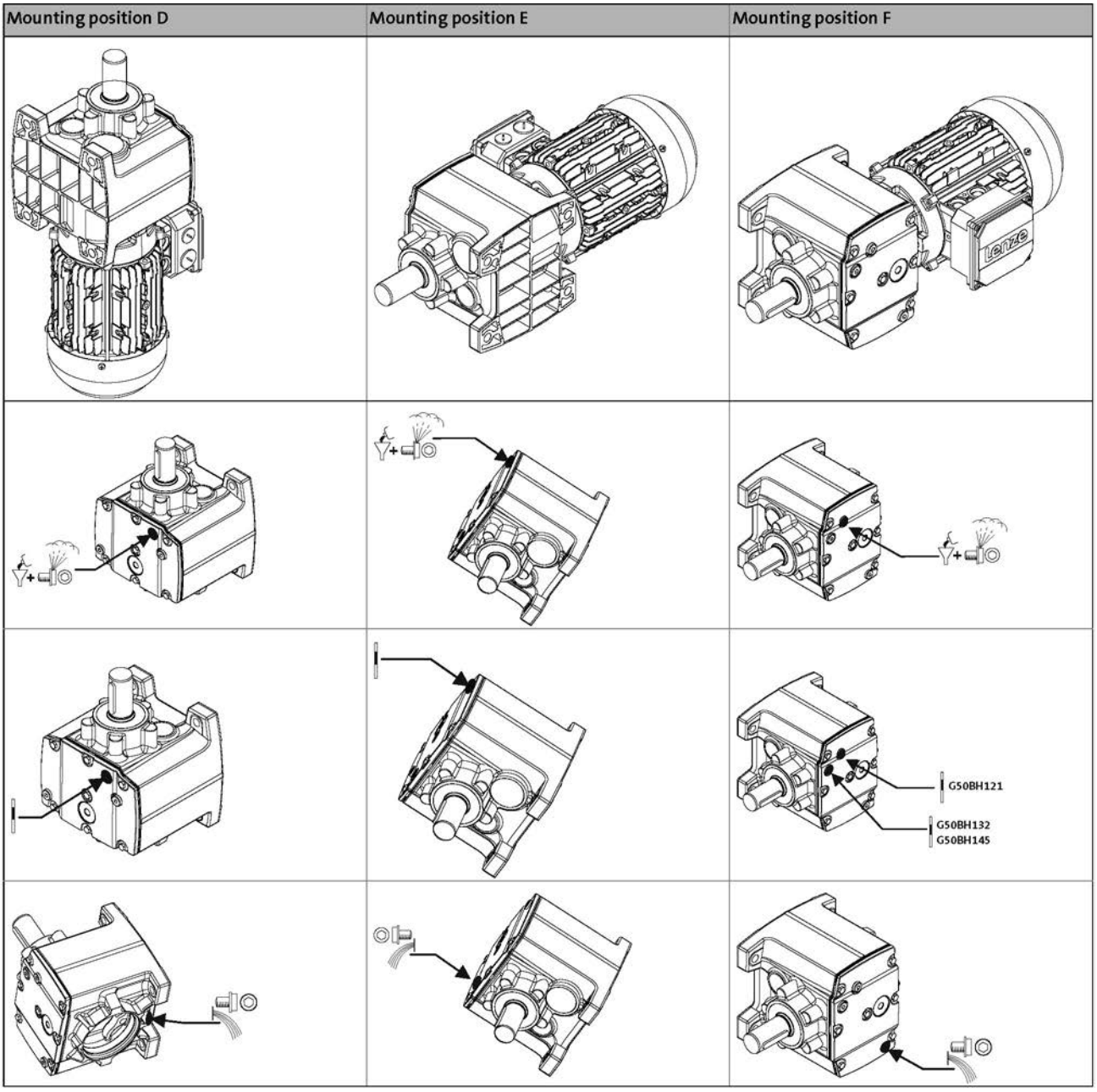

	Filling		Drain
	Breathing		Control

Ventilation

Position of ventilation, sealing elements and oil level check

g500-H600 ... H3000

Mounting position A	Mounting position B	Mounting position C
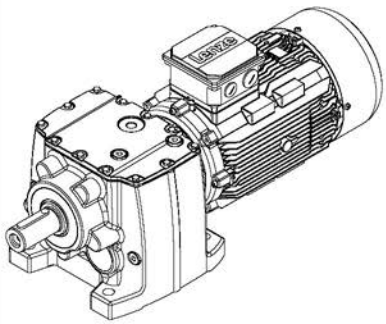	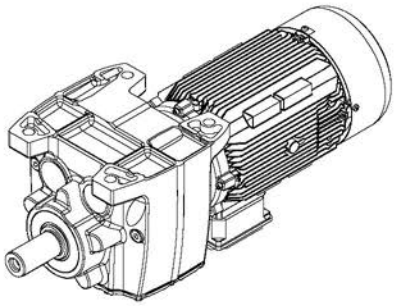	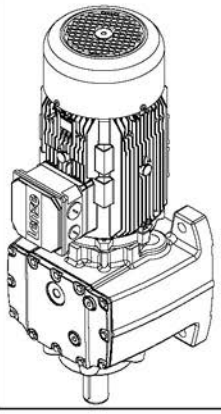
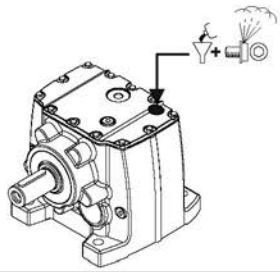	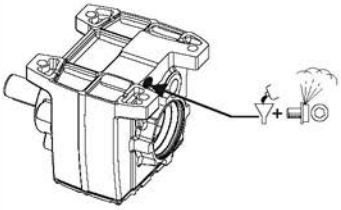	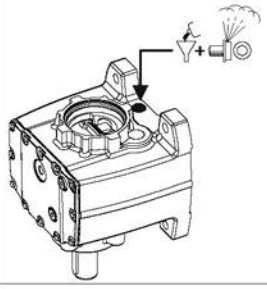
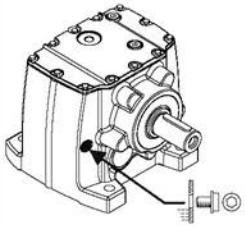	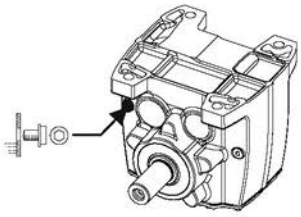	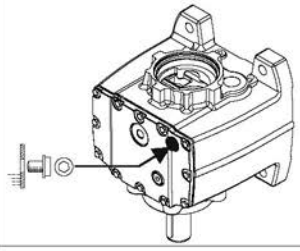
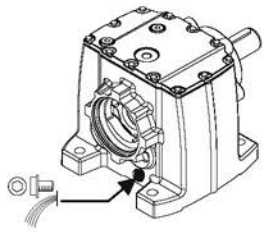	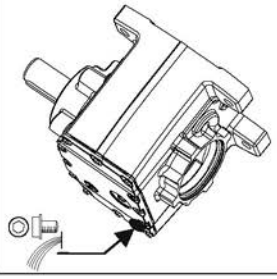	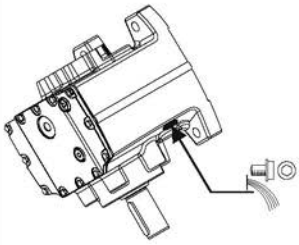

	Filling		Drain
	Breathing		Control

6.3

Ventilation

Position of ventilation, sealing elements and oil level check

g500-H600 ... H3000

Mounting position D	Mounting position E	Mounting position F
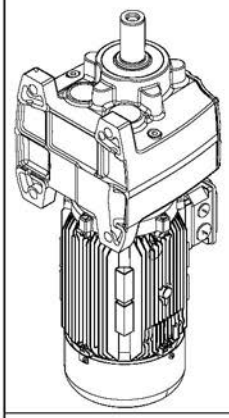	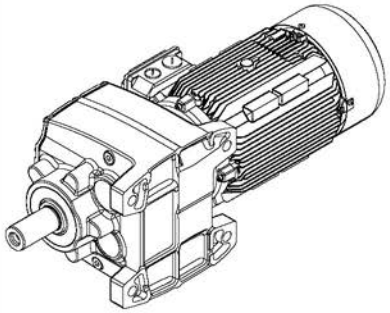	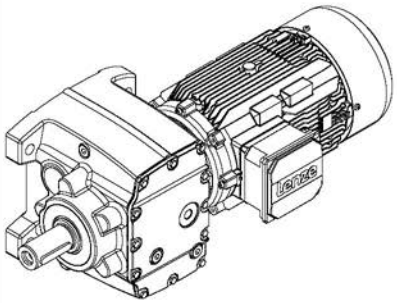
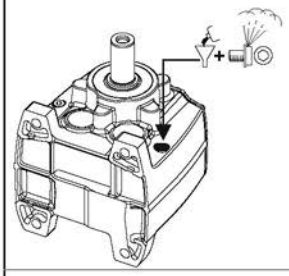	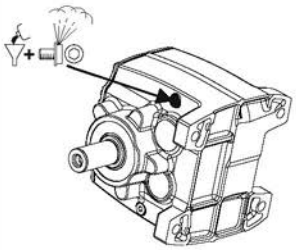	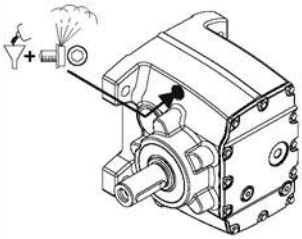
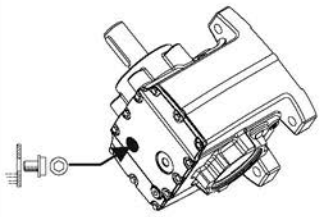	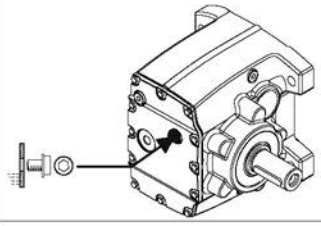	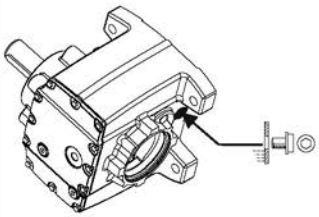
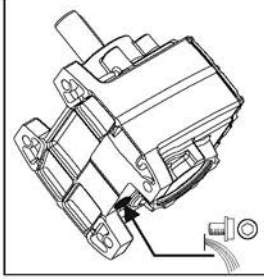	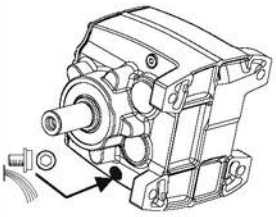	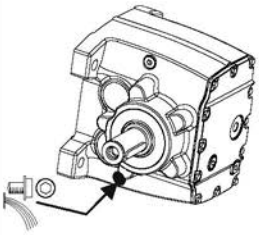

	Filling		Drain
	Breathing		Control

Ventilation

Position of ventilation, sealing elements and oil level check

g500-H5000 ... H14000

Mounting position A	Mounting position B	Mounting position C
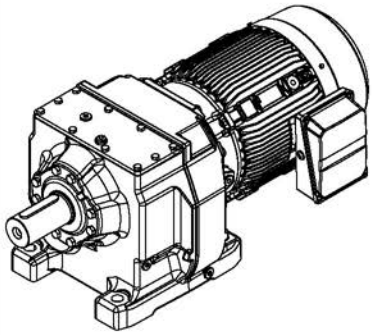	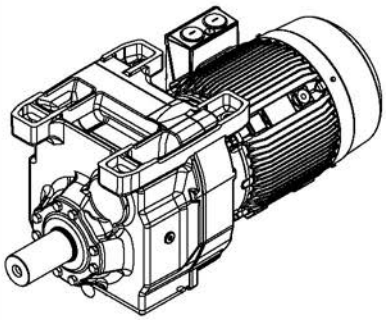	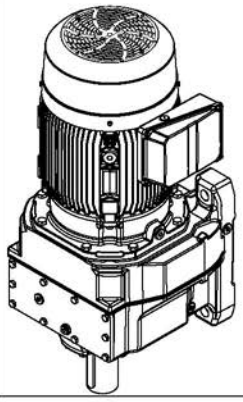
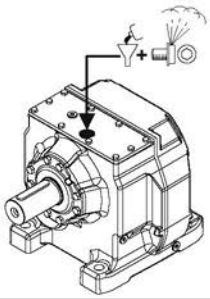	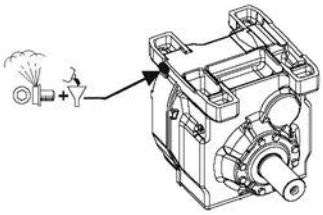	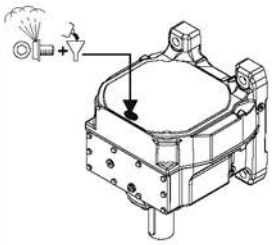
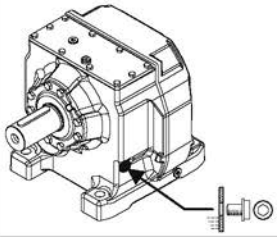	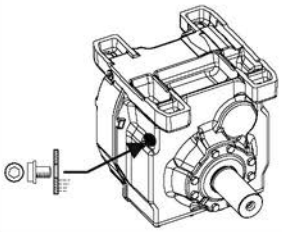	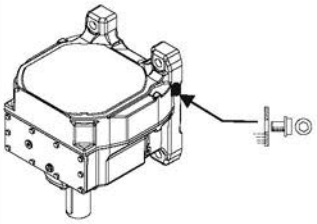
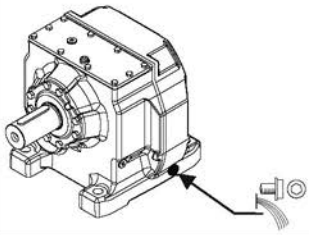	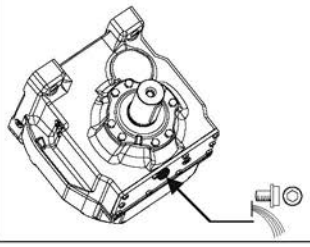	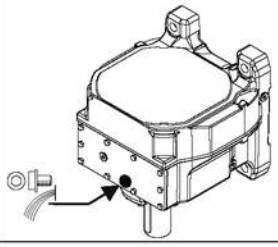

	Filling		Drain
	Breathing		Control

Ventilation

Position of ventilation, sealing elements and oil level check

g500-H5000 ... H14000

Mounting position D	Mounting position E	Mounting position F
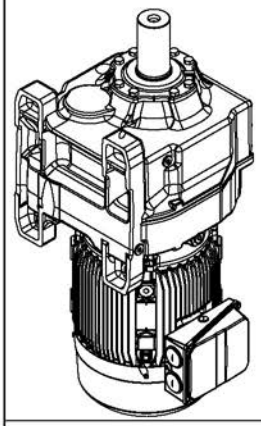	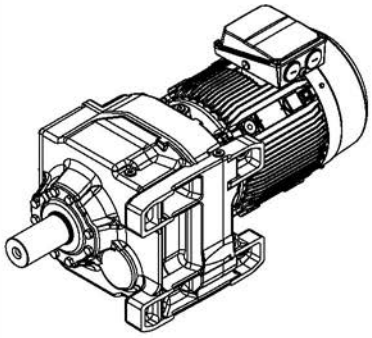	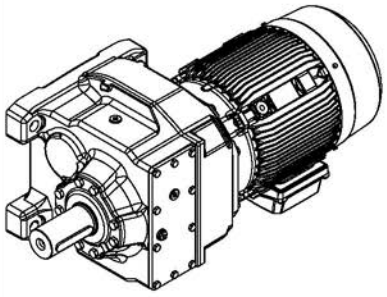
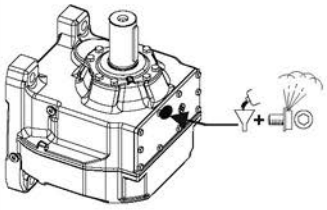	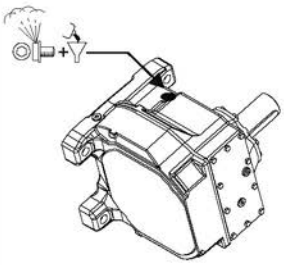	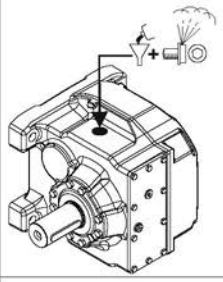
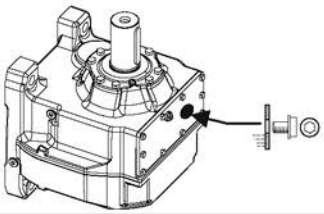	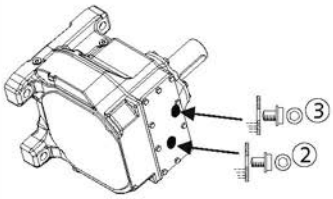	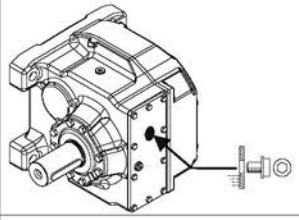
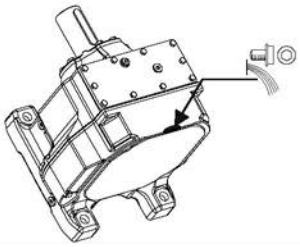	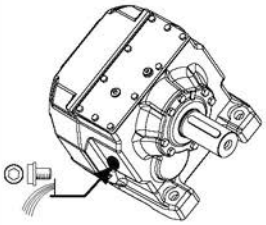	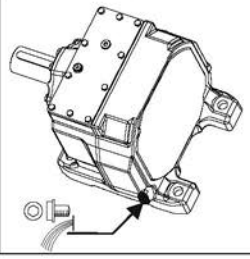

	Filling		Drain	②	2-stage
	Breathing		Control	③	3-stage

6.3

Standards and operating conditions

Geared motor data

Product					
Motor			MD□MA□□	m550	m540
Degree of protection					
EN 60529			IP55 [1] IP65 [1, 3] IP66 [1, 3]		IP55 [1] IP65 [1]
Energy efficiency class					
IEC 60034-30			IE1	IE3	
IEC 60034-2-1			Methodology for measuring efficiency		
10 CFR Part 431 (U.S. Integral hp Rule)				Table 5 (Premium Efficiency), CC127B	
GB18613-2012 (China Energy Label optional)				Grade 2	
Conformity					
CE			Low-Voltage Directive		
			2006/95/EC	2014/35/EU	
EAC			TP TC 004/2011 (TR CU 004/2011)		
Approval					
CCC			GB Standard 12350-2009		
CSA			CSA 22.2 No. 100		
cURus			UL 1004-1 UL 1004-8 File-No. E210321		UL 1004-1 File-No. E210321
Temperature class					
IEC/EN 60034-1; utilisation			B		
IEC/EN 60034-1; insulation system (enamel-insulated wire)			F		
Min. ambient operating temperature					
	$T_{opr,min}$	[°C]	-20		
Max. ambient temperature for operation					
	$T_{opr,max}$	[°C]	40		
With power reduction	$T_{opr,max}$	[°C]	60 [2]		
Site altitude					
Current derating at over 1000 m		[%/1000 m]	5.00		
Amsl	H_{max}	[m]	4000		

[1] Designs with different degrees of protection:
IP55 with brake (IP54 with manual release lever).
IP54 with resolver RS1.
IP54 with HTL incremental encoder IG128-24V-H.
[2] In case of cURus max. 40 °C are permissible.
[3] m550 on request.

► In the European Union, the ErP Directive stipulates minimum efficiency levels for three-phase AC motors. Geared three-phase AC motors that do not conform with this Directive do not meet CE requirements and must not be marketed in the European Economic Area. For further information about the ErP Directive, the efficiency regulations in other countries and the Lenze products concerned, please refer to the brochure "International efficiency directives for three-phase AC motors".

Permissible radial and axial forces at output

Permissible radial force

$F_{rad,perm} = f_w \times F_{rad,max}$

► If F_{rad} **and** $F_{ax} \neq 0$, please contact Lenze.

Permissible axial force

If there is no radial force, the maximum permissible axial force is 50 % of the table value $F_{rad,max}$

Application of forces

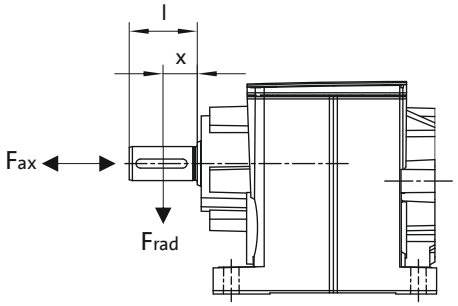

Additional load factor f_w at output shaft

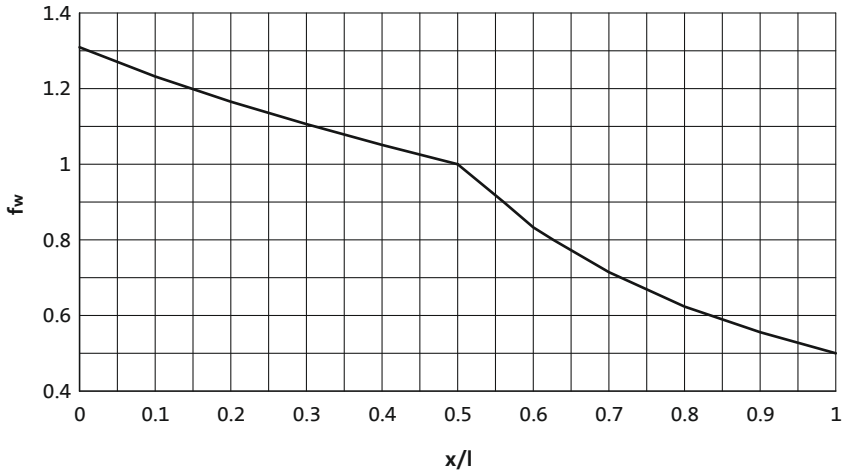

Permissible radial and axial forces at output

The values given in the table refer to the center shaft end force application point and are minimum values calculated according to the most unfavourable conditions (force application angle, mounting position, direction of rotation). The values were calculated for the motor/gearbox combination with a load capacity of c= 1.3 and an input speed of 1400 rpm.

In case of different operating conditions, considerably higher forces can be transmitted. Please contact Lenze.

Gearbox with foot with threaded pitch circle (VBR)

Product	n_2 [r/min]						
	250	160	100	63	40	25	≤16
	$F_{rad,max}$ [N]	$F_{rad,max}$ [N]	$F_{rad,max}$ [N]	$F_{rad,max}$ [N]	$F_{rad,max}$ [N]	$F_{rad,max}$ [N]	$F_{rad,max}$ [N]
g500-H45	700	800	900	1100	1400	1500	1500
g500-H100	1500	1800	2100	2600	2700	2700	2700
g500-H140	2200	2500	3000	3300	3700	4100	4200
g500-H210	2400	2800	3400	3900	3900	4400	4800
g500-H320	2600	3000	3500	4100	4800	5600	5700
g500-H450	3000	3500	4100	4700	5500	6600	7100
g500-H600	5400	6090	6920	7850	8500	8500	8500
g500-H850	6500	7500	8500	9500	10700	11000	11000
g500-H1500	9200	10400	12000	13700	15600	17000	17000
g500-H3000	10000	11500	13500	15600	18000	20000	20000
g500-H5000	11000	13000	16400	21600	26000	27000	
g500-H8000	23000	25000	29500	35000	42000	50000	
g500-H14000	41000	43000	50000	60200	70100		

Reinforced bearings

	$F_{rad,max}$ [N]	$F_{rad,max}$ [N]	$F_{rad,max}$ [N]	$F_{rad,max}$ [N]	$F_{rad,max}$ [N]	$F_{rad,max}$ [N]	$F_{rad,max}$ [N]
g500-H100	1800	2200	2700	3200	3300	3300	3300
g500-H140	2700	3100	3700	4100	4600	5100	5300
g500-H210	3000	3500	4200	4900	4900	5500	6000
g500-H320	3300	3800	4400	5100	6000	7000	7100
g500-H450	3800	4300	5100	5900	6900	8300	8900
g500-H600	8900	9700	10400	10900	11300	11700	12000
g500-H850	11500	12600	13500	14200	14800	15200	15600
g500-H1500	13000	17000	18200	19100	19800	20500	21000
g500-H3000	15000	21000	22100	23200	24000	25000	25000
g500-H5000	16000	18000	21000	27000	27000	27000	
g500-H8000	29000	30000	35000	42000	51000	51000	

Permissible radial and axial forces at output

Gearbox with/without foot with threaded pitch circle (VAR/VCR)
Gearbox with/without foot with flange (VAK/VCK)

Product	n_2 [r/min]						
	250	160	100	63	40	25	≤16
	$F_{rad,max}$ [N]	$F_{rad,max}$ [N]	$F_{rad,max}$ [N]	$F_{rad,max}$ [N]	$F_{rad,max}$ [N]	$F_{rad,max}$ [N]	$F_{rad,max}$ [N]
g500-H45	700	800	900	1100	1400	1500	1500
g500-H100	1500	1700	1700	1700	1700	1700	1700
g500-H140	2200	2500	2600	2600	2600	2600	2600
g500-H210	2400	2800	3000	3000	3000	3000	3000
g500-H320	2600	3000	3500	3600	3600	3600	3600
g500-H450	3000	3500	4100	4400	4400	4400	4400
g500-H600	5400	6000	6000	6000	6000	6000	6000
g500-H850	6050	6950	7800	7800	7800	7800	7800
g500-H1500	9200	10400	10500	10500	10500	10500	10500
g500-H3000	10000	11500	12500	12500	12500	12500	12500
g500-H5000	11000	13000	13500	13500	13500	13500	
g500-H8000	23000	25000	25000	25000	25000	25000	
g500-H14000	35100	35100	35100	35100	35100		

Reinforced bearings

	$F_{rad,max}$ [N]	$F_{rad,max}$ [N]	$F_{rad,max}$ [N]	$F_{rad,max}$ [N]	$F_{rad,max}$ [N]	$F_{rad,max}$ [N]	$F_{rad,max}$ [N]
g500-H100	1700	1700	1700	1700	1700	1700	1700
g500-H140	2600	2600	2600	2600	2600	2600	2600
g500-H210	3000	3000	3000	3000	3000	3000	3000
g500-H320	3300	3600	3600	3600	3600	3600	3600
g500-H450	3800	4300	4400	4400	4400	4400	4400
g500-H600	6000	6000	6000	6000	6000	6000	6000
g500-H850	7800	7800	7800	7800	7800	7800	7800
g500-H1500	10500	10500	10500	10500	10500	10500	10500
g500-H3000	12500	12500	12500	12500	12500	12500	12500
g500-H5000	13500	13500	13500	13500	13500	13500	
g500-H8000	25500	25500	25500	25500	25500	25500	

Permissible radial and axial forces at output

Gearbox without foot with reinforced flange (VCP)

For transmitting particularly high radial and axial forces

Product	n_2 [r/min]						
	250	160	100	63	40	25	≤16
	$F_{rad,max}$ [N]	$F_{rad,max}$ [N]	$F_{rad,max}$ [N]	$F_{rad,max}$ [N]	$F_{rad,max}$ [N]	$F_{rad,max}$ [N]	$F_{rad,max}$ [N]
g500-H100	3330	3650	3890	4060	4160	4240	4280
g500-H140	5510	5950	6270	6480	6620	6710	6770
g500-H210	6170	6670	7060	7330	7500	7620	7700
g500-H320	7040	7690	8210	8570	8810	8970	9080
g500-H450	7810	8550	9160	9590	9880	10100	10200

Selection tables, notes

Notes on the selection tables with 4-pole motors

The selection tables show the available combinations of gearbox type, number of stages, ratio and motor. They are used only to provide basic orientation.
The following legend indicates the structure of the selection tables.

Rated power Prated of the drive motor depending on the rated frequency

50 Hz: P_N = 0.75 kW
87 Hz: P_N = 1.35 kW

2-stufige Getriebe ← **Number of the gear stage of the gearbox**

Torque diagram

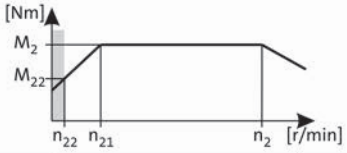

Mains operation 400 V, 50 Hz			Inverter operation 5 Hz -		- 20 Hz		- 50 Hz (1:10)			- 87 Hz (1:17.4)			i	Product		
n_2 [r/min]	M_2 [Nm]	c	n_{22} [r/min]	M_{22} [Nm]	n_{21} [r/min]	M_2 [Nm]	n_2 [r/min]	M_2 [Nm]	c	n_2 [r/min]	M_2 [Nm]	c		g500	m5□□	
444	16	4.3	44	12	184	16	444	16	4.3	784	16	3.5	3.267	-H140	50-P80/M4	
432	16	3.9	43	12	179	16	432	16	3.9	763	16	3.2	3.354	-H100	50-P80/M4	

Product Gearbox **Product Motor** **Ratio i** **Page number for dimensions**

Load capacity c of the gearbox
c is the ratio between the permissible rated torque of the gearbox and the rated torque of the three-phase AC motor (converted to the driven shaft).
c must be always higher than the service factor **k** determined for the application **k**.

$$c = \frac{M_{2,zul}}{M_{1N} \cdot i \cdot \eta_{Getr}} > k$$

Mains operation
Output speed **n2**
Output torque **M2**

Inverter operation
The speed and torque data are valid for self-ventilated and forced ventilated drives. Forced ventilated drives can always output the torque **M2** in the entire setting ranges. In the case of self-ventilated drives, a reduction to **M22** is required in the lower speed range.

Motor voltages

The power values and torques indicated in the selection tables refer to the following motor voltages:
- 50 Hz : Δ 230 V / Y 400 V
- 87 Hz : 400 V

Operation at 87 Hz

In 87 Hz operation, the three-phase AC motor (which is designed for a voltage of Δ 230 V / Y 400 V at 50 Hz) is operated on an inverter with 400 V rated voltage in a delta connection. It is important to note here that the inverter must be configured for 87Hz output.
This offers the following advantages over 50 Hz operation:
- the setting range of the motor is increased by a factor of 1.73.
- the motor can then provide around 1.73 times greater output, which in turn allows a smaller and more affordable motor to be selected for the application.
- the efficiency of the motor is also improved.

Selection tables, 4-pole motors

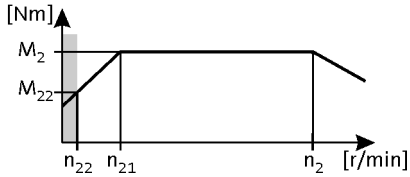

50 Hz: P_N = 0.06 kW
87 Hz: P_N = 0.11 kW

2-stage gearboxes

Mains operation 400 V, 50 Hz			Inverter operation 5 Hz -		- 20 Hz		- 50 Hz (1:10)			- 87 Hz (1:17.4)			i	Product		
n_2 [r/min]	M_2 [Nm]	c	n_{22} [r/min]	M_{22} [Nm]	n_{21} [r/min]	M_2 [Nm]	n_2 [r/min]	M_2 [Nm]	c	n_2 [r/min]	M_2 [Nm]	c		g500	MD□MA□□	
75	7.0	5.7	7.6	7.4	32	7.0	75	7.0	5.7	133	8.0	5.2	19.013	-H45	063-02	
67	8.0	5.3	6.8	8.3	28	8.0	67	8.0	5.3	119	9.0	4.9	21.350	-H45	063-02	
58	10	4.7	5.9	9.6	24	10	58	10	4.7	103	10	4.3	24.595	-H45	063-02	
52	11	4.2	5.3	11	22	11	52	11	4.2	92	11	3.9	27.618	-H45	063-02	
45	12	3.6	4.5	13	19	12	45	12	3.6	79	13	3.3	32.000	-H45	063-02	
40	14	3.2	4.0	14	17	14	40	14	3.2	71	14	3.0	35.933	-H45	063-02	
34	16	2.8	3.5	16	15	16	34	16	2.8	61	17	2.6	41.455	-H45	063-02	
31	18	2.5	3.1	18	13	18	31	18	2.5	55	19	2.4	46.550	-H45	063-02	
27	21	2.2	2.7	21	11	21	27	21	2.2	48	21	2.1	52.909	-H45	063-02	
24	23	1.9	2.4	23	10	23	24	23	1.9	43	24	1.9	59.413	-H45	063-02	

Selection tables, 4-pole motors

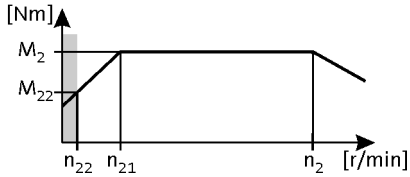

50 Hz: P_N = 0.09 kW
87 Hz: P_N = 0.16 kW

2-stage gearboxes

Mains operation 400 V, 50 Hz			Inverter operation 5 Hz -		- 20 Hz		- 50 Hz (1:10)			- 87 Hz (1:17.4)			i	Product		
n_2 [r/min]	M_2 [Nm]	c	n_{22} [r/min]	M_{22} [Nm]	n_{21} [r/min]	M_2 [Nm]	n_2 [r/min]	M_2 [Nm]	c	n_2 [r/min]	M_2 [Nm]	c		g500	MD□MA□□	
137	6.0	5.8	15	6.0	60	6.0	137	6.0	5.8	248	6.0	4.9	10.033	-H45	063-22	
120	7.0	5.1	13	6.8	53	7.0	120	7.0	5.1	217	7.0	4.3	11.429	-H45	063-22	
107	8.0	4.9	11	7.7	47	8.0	107	8.0	4.9	194	8.0	4.2	12.833	-H45	063-22	
93	9.0	4.3	9.8	8.9	40	9.0	93	9.0	4.3	168	9.0	3.7	14.836	-H45	063-22	
83	10	4.1	8.7	10	36	10	83	10	4.1	149	10	4.0	16.660	-H45	063-22	
72	12	3.6	7.6	11	32	11	72	12	3.6	131	11	3.6	19.013	-H45	063-22	
64	13	3.4	6.8	13	28	13	64	13	3.4	116	13	3.3	21.350	-H45	063-22	
56	15	3.0	5.9	15	24	15	56	15	3.0	101	15	3.0	24.595	-H45	063-22	
50	17	2.7	5.3	17	22	16	50	17	2.7	90	16	2.6	27.618	-H45	063-22	
43	19	2.3	4.5	19	19	19	43	19	2.3	78	19	2.3	32.000	-H45	063-22	
38	22	2.1	4.0	21	17	21	38	22	2.1	69	21	2.0	35.933	-H45	063-22	
33	25	1.8	3.5	25	15	25	33	25	1.8	60	25	1.8	41.455	-H45	063-22	
30	28	1.6	3.1	28	13	28	30	28	1.6	53	28	1.6	46.550	-H45	063-22	
26	32	1.4	2.7	32	11	32	26	32	1.4	47	32	1.4	52.909	-H45	063-22	
23	36	1.3	2.4	35	10	35	23	36	1.3	42	35	1.3	59.413	-H45	063-22	

Selection tables, 4-pole motors

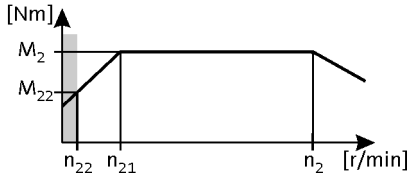

50 Hz: P_N = 0.12 kW
87 Hz: P_N = 0.21 kW

2-stage gearboxes

Mains operation 400 V, 50 Hz			Inverter operation 5 Hz -		- 20 Hz		- 50 Hz (1:10)			- 87 Hz (1:17.4)			i	Product		
n_2 [r/min]	M_2 [Nm]	c	n_{22} [r/min]	M_{22} [Nm]	n_{21} [r/min]	M_2 [Nm]	n_2 [r/min]	M_2 [Nm]	c	n_2 [r/min]	M_2 [Nm]	c		g500	MD□MA□□	
204	5.0	5.5	21	4.2	86	5.0	204	5.0	5.5	363	5.0	4.7	6.982	-H45	063-12	
182	6.0	5.2	19	4.7	77	6.0	182	6.0	5.2	323	6.0	4.5	7.840	-H45	063-12	
160	7.0	4.7	16	5.4	67	7.0	160	7.0	4.7	284	7.0	4.0	8.935	-H45	063-12	
142	8.0	4.5	15	6.0	60	8.0	142	8.0	4.5	253	8.0	3.8	10.033	-H45	063-12	
125	9.0	3.9	13	6.9	53	9.0	125	9.0	3.9	222	9.0	3.4	11.429	-H45	063-12	
111	10	3.8	11	7.7	47	10	111	10	3.8	198	10	3.2	12.833	-H45	063-12	
96	12	3.4	9.8	8.9	40	11	96	12	3.4	171	11	2.9	14.836	-H45	063-12	
86	13	3.2	8.7	10	36	13	86	13	3.2	152	13	3.1	16.660	-H45	063-12	
75	15	2.8	7.6	11	32	15	75	15	2.8	133	15	2.8	19.013	-H45	063-12	
73	15	5.5	7.4	12	31	15	73	15	5.5	130	15	4.7	19.486	-H100	063-12	
67	17	2.6	6.8	13	28	16	67	17	2.6	119	16	2.6	21.350	-H45	063-12	
64	17	5.5	6.5	13	27	17	64	17	5.5	114	17	4.7	22.314	-H100	063-12	
58	19	2.4	5.9	15	24	19	58	19	2.4	103	19	2.3	24.595	-H45	063-12	
57	19	5.5	5.8	15	24	19	57	19	5.5	102	19	4.7	24.829	-H140	063-12	
57	20	4.6	5.8	15	24	19	57	20	4.6	101	19	3.9	25.095	-H100	063-12	
52	21	5.5	5.3	17	22	21	52	21	5.5	93	21	5.3	27.415	-H140	063-12	
52	22	2.1	5.3	17	22	21	52	22	2.1	92	21	2.0	27.618	-H45	063-12	
50	22	4.5	5.0	17	21	22	50	22	4.5	88	22	4.3	28.738	-H100	063-12	
45	25	4.0	4.6	19	19	24	45	25	4.0	80	24	3.9	31.805	-H100	063-12	
45	25	4.6	4.5	19	19	25	45	25	4.6	79	25	4.5	31.976	-H140	063-12	
45	25	1.8	4.5	19	19	25	45	25	1.8	79	25	1.8	32.000	-H45	063-12	
41	27	4.6	4.1	21	17	27	41	27	4.6	72	27	4.5	35.095	-H210	063-12	
40	28	4.6	4.1	21	17	27	40	28	4.6	72	27	4.5	35.308	-H140	063-12	
40	28	1.6	4.0	22	17	28	40	28	1.6	71	28	1.6	35.933	-H45	063-12	
39	28	3.5	4.0	22	17	28	39	28	3.5	70	28	3.4	36.422	-H100	063-12	
37	30	4.6	3.8	23	16	29	37	30	4.6	66	29	4.5	38.238	-H320	063-12	
36	31	4.6	3.7	24	15	30	36	31	4.6	65	30	4.5	39.286	-H210	063-12	
36	31	3.2	3.6	24	15	31	36	31	3.2	64	31	3.1	39.857	-H100	063-12	
35	32	4.0	3.6	24	15	31	35	32	4.0	63	31	4.1	40.526	-H140	063-12	
34	32	1.4	3.5	25	15	32	34	32	1.4	61	32	1.4	41.455	-H45	063-12	
34	33	4.0	3.4	26	14	33	34	33	4.0	60	33	4.1	42.593	-H210	063-12	
33	34	4.6	3.3	26	14	33	33	34	4.6	58	33	4.7	43.436	-H320	063-12	
32	35	4.0	3.2	27	13	34	32	35	4.0	57	34	4.1	44.748	-H140	063-12	
31	36	2.8	3.2	27	13	35	31	36	2.8	56	35	2.9	45.643	-H100	063-12	
31	36	4.0	3.1	28	13	36	31	36	4.0	55	36	4.1	46.407	-H320	063-12	

Selection tables, 4-pole motors

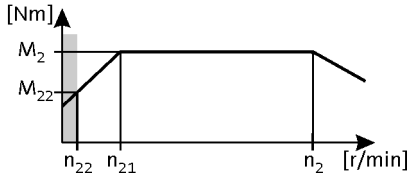

50 Hz: P_N = 0.12 kW
87 Hz: P_N = 0.21 kW

2-stage gearboxes

Mains operation 400 V, 50 Hz			Inverter operation 5 Hz -		- 20 Hz		- 50 Hz (1:10)			- 87 Hz (1:17.4)			i	Product		
n_2 [r/min]	M_2 [Nm]	c	n_{22} [r/min]	M_{22} [Nm]	n_{21} [r/min]	M_2 [Nm]	n_2 [r/min]	M_2 [Nm]	c	n_2 [r/min]	M_2 [Nm]	c		g500	MD□MA□□	
31	36	1.2	3.1	28	13	36	31	36	1.2	55	36	1.3	46.550	-H45	063-12	
30	37	4.0	3.0	29	13	37	30	37	4.0	53	37	4.1	47.679	-H210	063-12	
28	40	3.3	2.9	31	12	39	28	40	3.3	50	39	3.3	50.786	-H140	063-12	
27	41	1.7	2.8	32	11	40	27	41	1.7	48	40	1.7	52.510	-H100	063-12	
27	41	4.0	2.8	32	11	40	27	41	4.0	48	40	4.1	52.715	-H320	063-12	
27	41	1.1	2.7	32	11	41	27	41	1.1	48	41	1.1	52.909	-H45	063-12	
26	42	3.1	2.7	33	11	42	26	42	3.1	47	42	3.2	54.438	-H210	063-12	
25	44	3.2	2.6	34	11	43	25	44	3.2	45	43	3.3	56.077	-H140	063-12	
24	46	1.0	2.4	36	10	46	24	46	1.0	43	46	1.0	59.413	-H45	063-12	
24	47	1.7	2.4	36	10	46	24	47	1.7	42	46	1.7	60.133	-H100	063-12	
23	48	3.1	2.4	37	9.8	47	23	48	3.1	42	47	3.2	60.938	-H210	063-12	
21	52	1.7	2.2	40	9.0	51	21	52	1.7	38	51	1.7	66.908	-H140	063-12	
19	58	1.7	2.0	44	8.1	57	19	58	1.7	34	57	1.7	73.879	-H140	063-12	

3-stage gearboxes

Mains operation 400 V, 50 Hz			Inverter operation 5 Hz -		- 20 Hz		- 50 Hz (1:10)			- 87 Hz (1:17.4)			i	Product		
n_2 [r/min]	M_2 [Nm]	c	n_{22} [r/min]	M_{22} [Nm]	n_{21} [r/min]	M_2 [Nm]	n_2 [r/min]	M_2 [Nm]	c	n_2 [r/min]	M_2 [Nm]	c		g500	MD□MA□□	
29	37	5.6	3.0	29	12	37	29	37	5.6	52	37	5.5	48.571	-H210	063-12	
26	43	4.9	2.6	33	11	42	26	43	4.9	46	42	4.8	55.529	-H210	063-12	
23	48	4.4	2.3	37	9.7	47	23	48	4.4	41	47	4.3	62.160	-H210	063-12	
20	55	3.9	2.0	42	8.4	54	20	55	3.9	36	54	3.7	71.026	-H210	063-12	
18	59	5.4	1.9	46	7.8	59	18	59	5.4	33	59	5.2	77.387	-H320	063-12	
18	61	3.4	1.8	47	7.5	60	18	61	3.4	32	60	3.3	79.507	-H210	063-12	
16	68	4.7	1.6	52	6.8	66	16	68	4.7	29	66	4.8	87.906	-H320	063-12	
16	71	3.0	1.6	55	6.5	70	16	71	3.0	28	70	3.0	92.205	-H210	063-12	
14	77	4.1	1.4	59	6.0	76	14	77	4.1	25	76	4.2	100.462	-H320	063-12	
14	79	2.7	1.4	61	5.8	78	14	79	2.7	25	78	2.7	103.214	-H210	063-12	
13	88	3.7	1.3	68	5.3	86	13	88	3.7	22	86	3.7	114.118	-H320	063-12	
12	91	2.3	1.2	70	5.1	89	12	91	2.3	22	89	2.4	118.162	-H210	063-12	
12	93	4.8	1.2	72	4.9	92	12	93	4.8	21	92	4.9	121.342	-H450	063-12	
11	99	3.2	1.1	76	4.7	97	11	99	3.2	20	97	3.3	128.743	-H320	063-12	
11	102	2.1	1.1	78	4.5	100	11	102	2.1	19	100	2.1	132.270	-H210	063-12	
10	105	4.3	1.1	81	4.4	104	10	105	4.3	19	104	4.3	137.133	-H450	063-12	
10	110	4.6	1.0	85	4.2	108	10	110	4.6	18	108	4.7	142.988	-H600	063-12	
9.7	112	2.9	1.0	87	4.1	111	9.7	112	2.9	17	111	2.9	146.244	-H320	063-12	
9.3	117	1.8	0.9	91	3.9	116	9.3	117	1.8	17	116	1.8	152.853	-H210	063-12	
9.1	120	3.8	0.9	93	3.8	118	9.1	120	3.8	16	118	3.8	156.274	-H450	063-12	
8.9	123	4.6	0.9	95	3.7	121	8.9	123	4.6	16	121	4.7	160.585	-H600	063-12	
8.6	128	2.5	0.9	99	3.6	126	8.6	128	2.5	15	126	2.5	166.541	-H320	063-12	

Selection tables, 4-pole motors

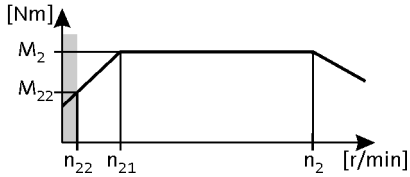

50 Hz: P_N = 0.12 kW
87 Hz: P_N = 0.21 kW

3-stage gearboxes

Mains operation 400 V, 50 Hz			Inverter operation 5 Hz -		- 20 Hz		- 50 Hz (1:10)			- 87 Hz (1:17.4)			i	Product		
n_2 [r/min]	M_2 [Nm]	c	n_{22} [r/min]	M_{22} [Nm]	n_{21} [r/min]	M_2 [Nm]	n_2 [r/min]	M_2 [Nm]	c	n_2 [r/min]	M_2 [Nm]	c		g500	MD□MA□□	
8.3	131	1.6	0.8	101	3.5	129	8.3	131	1.6	15	129	1.6	171.104	-H210	063-12	
8.2	133	4.0	0.8	103	3.5	131	8.2	133	4.0	15	131	4.1	173.536	-H600	063-12	
8.1	136	3.3	0.8	105	3.4	134	8.1	136	3.3	14	134	3.4	176.611	-H450	063-12	
7.5	145	2.2	0.8	112	3.2	143	7.5	145	2.2	13	143	2.2	189.179	-H320	063-12	
7.3	150	4.0	0.7	115	3.1	147	7.3	150	4.0	13	147	4.1	194.892	-H600	063-12	
7.2	152	3.0	0.7	117	3.0	150	7.2	152	3.0	13	150	3.0	198.059	-H450	063-12	
7.2	153	1.4	0.7	118	3.0	150	7.2	153	1.4	13	150	1.4	198.873	-H210	063-12	
6.6	167	1.9	0.7	128	2.8	164	6.6	167	1.9	12	164	1.9	216.683	-H320	063-12	
6.4	170	3.1	0.7	131	2.7	168	6.4	170	3.1	11	168	3.2	221.794	-H600	063-12	
6.4	171	1.2	0.7	132	2.7	168	6.4	171	1.2	11	168	1.3	222.619	-H210	063-12	
6.4	172	2.6	0.6	133	2.7	169	6.4	172	2.6	11	169	2.7	223.833	-H450	063-12	
5.8	189	1.7	0.6	146	2.4	186	5.8	189	1.7	10	186	1.7	246.137	-H320	063-12	
5.7	191	2.4	0.6	147	2.4	188	5.7	191	2.4	10	188	2.4	248.200	-H450	063-12	
5.7	191	3.1	0.6	147	2.4	188	5.7	191	3.1	10	188	3.2	249.089	-H600	063-12	
5.5	198	1.1	0.6	153	2.3	195	5.5	198	1.1	9.8	195	1.1	257.631	-H210	063-12	
5.1	216	2.1	0.5	166	2.1	212	5.1	216	2.1	9.0	212	2.1	280.500	-H450	063-12	
5.1	216	1.3	0.5	166	2.1	212	5.1	216	1.3	9.0	212	1.3	280.702	-H320	063-12	
4.9	222	1.0	0.5	171	2.1	218	4.9	222	1.0	8.8	218	1.0	288.393	-H210	063-12	
4.5	245	1.3	0.5	189	1.9	241	4.5	245	1.3	8.0	241	1.3	318.859	-H320	063-12	
4.4	251	1.7	0.4	194	1.8	247	4.4	251	1.7	7.8	247	1.7	326.994	-H450	063-12	
3.9	284	1.6	0.4	219	1.6	279	3.9	284	1.6	6.9	279	1.6	369.548	-H450	063-12	

Selection tables, 4-pole motors

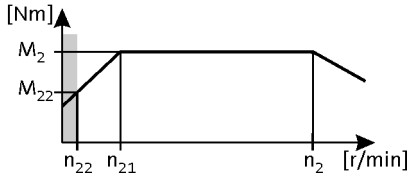

50 Hz: P_N = 0.18 kW
87 Hz: P_N = 0.33 kW

2-stage gearboxes

Mains operation 400 V, 50 Hz			Inverter operation 5 Hz -		- 20 Hz		- 50 Hz (1:10)			- 87 Hz (1:17.4)			i	Product		
n_2 [r/min]	M_2 [Nm]	c	n_{22} [r/min]	M_{22} [Nm]	n_{21} [r/min]	M_2 [Nm]	n_2 [r/min]	M_2 [Nm]	c	n_2 [r/min]	M_2 [Nm]	c		g500	MD□MA□□	
526	3.0	4.7	56	2.4	231	3.0	526	3.0	4.7	953	3.0	3.9	2.597	-H45	063-32	
400	4.0	4.5	43	3.2	176	4.0	400	4.0	4.5	725	4.0	3.7	3.413	-H45	063-32	
313	5.0	3.9	33	4.1	137	5.0	313	5.0	3.9	567	5.0	3.3	4.368	-H45	063-32	
257	6.0	4.2	27	5.0	113	6.0	257	6.0	4.2	466	7.0	3.5	5.312	-H45	063-32	
229	7.0	4.0	24	5.6	101	7.0	229	7.0	4.0	415	7.0	3.3	5.965	-H45	063-32	
218	8.0	4.5	23	5.9	96	8.0	218	8.0	4.5	395	8.0	3.7	6.272	-H140	063-32	
212	8.0	4.5	23	6.1	93	8.0	212	8.0	4.5	384	8.0	3.7	6.440	-H100	063-32	
196	9.0	3.5	21	6.6	86	9.0	196	9.0	3.5	355	9.0	2.9	6.982	-H45	063-32	
174	10	3.3	19	7.4	77	10	174	10	3.3	316	10	2.8	7.840	-H45	063-32	
171	10	4.1	18	7.5	75	10	171	10	4.1	309	10	3.5	8.000	-H140	063-32	
166	10	4.1	18	7.7	73	10	166	10	4.1	301	10	3.5	8.214	-H100	063-32	
153	11	3.0	16	8.4	67	11	153	11	3.0	277	11	2.5	8.935	-H45	063-32	
136	12	2.9	15	9.4	60	12	136	12	2.9	247	12	2.4	10.033	-H45	063-32	
120	14	4.5	13	11	53	14	120	14	4.5	218	14	3.7	11.360	-H100	063-32	
119	14	2.5	13	11	53	14	119	14	2.5	217	14	2.1	11.429	-H45	063-32	
108	15	4.5	12	12	48	15	108	15	4.5	196	16	3.7	12.640	-H140	063-32	
108	15	4.1	12	12	47	15	108	15	4.1	196	16	3.5	12.653	-H100	063-32	
106	16	2.4	11	12	47	16	106	16	2.4	193	16	2.0	12.833	-H45	063-32	
98	17	4.5	10	13	43	17	98	17	4.5	177	17	3.7	13.957	-H140	063-32	
94	18	4.1	10	14	41	18	94	18	4.1	171	18	3.5	14.490	-H100	063-32	
92	18	2.2	9.8	14	40	18	92	18	2.2	167	18	1.8	14.836	-H45	063-32	
85	20	4.1	9.0	15	37	20	85	20	4.1	154	20	3.5	16.122	-H140	063-32	
82	20	2.0	8.7	16	36	20	82	20	2.0	149	21	1.9	16.660	-H45	063-32	
77	22	4.1	8.1	17	34	22	77	22	4.1	139	22	3.5	17.802	-H140	063-32	
72	23	1.8	7.6	18	32	23	72	23	1.8	130	23	1.7	19.013	-H45	063-32	
70	24	3.5	7.4	18	31	24	70	24	3.5	127	24	2.9	19.486	-H100	063-32	
64	26	1.7	6.8	20	28	26	64	26	1.7	116	26	1.6	21.350	-H45	063-32	
61	27	3.5	6.5	21	27	27	61	27	3.5	111	28	2.9	22.314	-H100	063-32	
56	30	1.5	5.9	23	24	30	56	30	1.5	101	30	1.4	24.595	-H45	063-32	
55	30	3.5	5.8	23	24	30	55	30	3.5	100	31	2.9	24.829	-H140	063-32	
54	31	2.9	5.8	24	24	31	54	31	2.9	99	31	2.5	25.095	-H100	063-32	
50	33	3.5	5.3	26	22	33	50	33	3.5	90	34	3.3	27.415	-H140	063-32	
49	34	1.3	5.3	26	22	34	49	34	1.3	90	34	1.3	27.618	-H45	063-32	
48	35	2.9	5.0	27	21	35	48	35	2.9	86	36	2.7	28.738	-H100	063-32	
43	39	2.6	4.6	30	19	39	43	39	2.6	78	39	2.4	31.805	-H100	063-32	

Selection tables, 4-pole motors

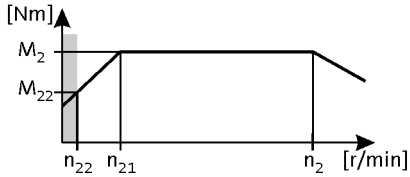

50 Hz: P_N = 0.18 kW
87 Hz: P_N = 0.33 kW

2-stage gearboxes

Mains operation 400 V, 50 Hz			Inverter operation 5 Hz -		- 20 Hz		- 50 Hz (1:10)			- 87 Hz (1:17.4)			i	Product		
n_2 [r/min]	M_2 [Nm]	c	n_{22} [r/min]	M_{22} [Nm]	n_{21} [r/min]	M_2 [Nm]	n_2 [r/min]	M_2 [Nm]	c	n_2 [r/min]	M_2 [Nm]	c		g500	MD□MA□□	
43	39	2.9	4.5	30	19	39	43	39	2.9	77	40	2.8	31.976	-H140	063-32	
43	39	1.2	4.5	30	19	39	43	39	1.2	77	40	1.1	32.000	-H45	063-32	
39	43	2.9	4.1	33	17	43	39	43	2.9	71	43	2.8	35.095	-H210	063-32	
39	43	2.9	4.1	33	17	43	39	43	2.9	70	44	2.8	35.308	-H140	063-32	
38	44	1.0	4.0	34	17	44	38	44	1.0	69	44	1.0	35.933	-H45	063-32	
38	44	2.3	4.0	34	17	44	38	44	2.3	68	45	2.1	36.422	-H100	063-32	
36	47	2.9	3.8	36	16	47	36	47	2.9	65	47	2.8	38.238	-H320	063-32	
35	48	2.9	3.7	37	15	48	35	48	2.9	63	49	2.8	39.286	-H210	063-32	
34	49	2.1	3.6	38	15	49	34	49	2.1	62	49	2.0	39.857	-H100	063-32	
34	50	2.6	3.6	38	15	50	34	50	2.6	61	50	2.5	40.526	-H140	063-32	
33	51	0.9	3.5	39	15	51	33	51	0.9	60	51	0.8	41.455	-H45	063-32	
32	52	2.6	3.4	40	14	52	32	52	2.6	58	53	2.5	42.593	-H210	063-32	
31	53	2.9	3.3	41	14	53	31	53	2.9	57	54	2.9	43.436	-H320	063-32	
31	55	2.6	3.2	42	13	55	31	55	2.6	55	55	2.5	44.748	-H140	063-32	
30	56	1.8	3.2	43	13	56	30	56	1.8	54	56	1.8	45.643	-H100	063-32	
29	57	2.6	3.1	44	13	57	29	57	2.6	53	57	2.5	46.407	-H320	063-32	
29	58	2.6	3.0	45	13	58	29	58	2.6	52	59	2.5	47.679	-H210	063-32	
27	62	2.1	2.9	48	12	62	27	62	2.1	49	63	2.1	50.786	-H140	063-32	
26	64	1.1	2.8	49	11	64	26	64	1.1	47	65	1.1	52.510	-H100	063-32	
26	64	2.6	2.8	50	11	64	26	64	2.6	47	65	2.5	52.715	-H320	063-32	
25	67	2.0	2.7	51	11	67	25	67	2.0	46	67	2.0	54.438	-H210	063-32	
24	69	2.0	2.6	53	11	69	24	69	2.0	44	69	2.0	56.077	-H140	063-32	
23	73	1.1	2.4	57	10	73	23	73	1.1	41	74	1.1	60.133	-H100	063-32	
22	74	2.0	2.4	57	9.8	74	22	74	2.0	41	75	2.0	60.938	-H210	063-32	
20	82	1.1	2.2	63	9.0	82	20	82	1.1	37	83	1.1	66.908	-H140	063-32	
19	90	1.1	2.0	70	8.1	90	19	90	1.1	34	91	1.1	73.879	-H140	063-32	

3-stage gearboxes

Mains operation 400 V, 50 Hz			Inverter operation 5 Hz -		- 20 Hz		- 50 Hz (1:10)			- 87 Hz (1:17.4)			i	Product		
n_2 [r/min]	M_2 [Nm]	c	n_{22} [r/min]	M_{22} [Nm]	n_{21} [r/min]	M_2 [Nm]	n_2 [r/min]	M_2 [Nm]	c	n_2 [r/min]	M_2 [Nm]	c		g500	MD□MA□□	
32	52	4.0	3.3	40	14	52	32	52	4.0	57	53	3.4	43.390	-H210	063-32	
29	57	4.5	3.1	44	13	57	29	57	4.5	52	58	4.2	47.276	-H320	063-32	
28	58	3.6	3.0	45	12	58	28	58	3.6	51	59	3.4	48.571	-H210	063-32	
25	65	4.5	2.7	50	11	65	25	65	4.5	46	65	4.2	53.703	-H320	063-32	
25	67	3.1	2.6	52	11	67	25	67	3.1	45	68	3.0	55.529	-H210	063-32	
23	73	4.1	2.4	56	9.9	73	23	73	4.1	41	74	3.9	60.502	-H320	063-32	
22	74	4.5	2.3	57	9.7	74	22	74	4.5	40	75	4.2	61.774	-H450	063-32	
22	75	2.8	2.3	58	9.7	75	22	75	2.8	40	76	2.7	62.160	-H210	063-32	
20	83	3.9	2.1	64	8.7	83	20	83	3.9	36	84	3.7	68.726	-H320	063-32	

Selection tables, 4-pole motors

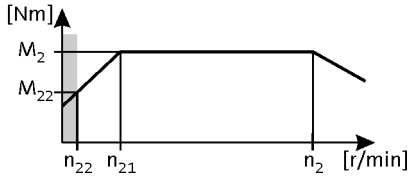

50 Hz: P_N = 0.18 kW
87 Hz: P_N = 0.33 kW

3-stage gearboxes

Mains operation 400 V, 50 Hz			Inverter operation 5 Hz -		- 20 Hz		- 50 Hz (1:10)			- 87 Hz (1:17.4)			i	Product		
n_2 [r/min]	M_2 [Nm]	c	n_{22} [r/min]	M_{22} [Nm]	n_{21} [r/min]	M_2 [Nm]	n_2 [r/min]	M_2 [Nm]	c	n_2 [r/min]	M_2 [Nm]	c		g500	MD□MA□□	
20	84	4.5	2.1	65	8.6	84	20	84	4.5	36	85	4.2	69.813	-H450	063-32	
19	85	2.5	2.0	66	8.4	85	19	85	2.5	35	86	2.3	71.026	-H210	063-32	
18	93	3.4	1.9	72	7.8	93	18	93	3.4	32	94	3.3	77.387	-H320	063-32	
17	95	4.1	1.8	73	7.6	95	17	95	4.1	31	96	3.9	78.794	-H450	063-32	
17	96	2.2	1.8	74	7.5	96	17	96	2.2	31	97	2.1	79.507	-H210	063-32	
16	106	3.0	1.6	82	6.8	106	16	106	3.0	28	107	3.0	87.906	-H320	063-32	
15	107	4.1	1.6	83	6.7	107	15	107	4.1	28	108	4.1	89.048	-H450	063-32	
15	111	1.9	1.6	85	6.5	111	15	111	1.9	27	112	1.9	92.205	-H210	063-32	
14	121	2.7	1.4	93	6.0	121	14	121	2.7	25	122	2.6	100.462	-H320	063-32	
13	124	1.7	1.4	96	5.8	124	13	124	1.7	24	126	1.7	103.214	-H210	063-32	
12	137	2.3	1.3	106	5.3	137	12	137	2.3	22	139	2.3	114.118	-H320	063-32	
12	142	1.5	1.2	110	5.1	142	12	142	1.5	21	144	1.5	118.162	-H210	063-32	
11	146	3.1	1.2	112	4.9	146	11	146	3.1	20	148	3.1	121.342	-H450	063-32	
11	155	2.1	1.1	119	4.7	155	11	155	2.1	19	157	2.0	128.743	-H320	063-32	
10	159	1.3	1.1	123	4.5	159	10	159	1.3	19	161	1.3	132.270	-H210	063-32	
10	165	2.7	1.1	127	4.4	165	10	165	2.7	18	167	2.7	137.133	-H450	063-32	
9.5	172	2.9	1.0	133	4.2	172	9.5	172	2.9	17	174	2.9	142.988	-H600	063-32	
9.3	176	1.8	1.0	136	4.1	176	9.3	176	1.8	17	178	1.8	146.244	-H320	063-32	
8.9	184	1.1	0.9	142	3.9	184	8.9	184	1.1	16	186	1.1	152.853	-H210	063-32	
8.7	188	2.4	0.9	145	3.8	188	8.7	188	2.4	16	190	2.4	156.274	-H450	063-32	
8.5	193	2.9	0.9	149	3.7	193	8.5	193	2.9	15	195	2.9	160.585	-H600	063-32	
8.2	200	1.6	0.9	154	3.6	200	8.2	200	1.6	15	203	1.6	166.541	-H320	063-32	
8.0	206	1.0	0.8	159	3.5	206	8.0	206	1.0	15	208	1.0	171.104	-H210	063-32	
7.9	209	2.6	0.8	161	3.5	209	7.9	209	2.6	14	211	2.5	173.536	-H600	063-32	
7.7	213	2.1	0.8	164	3.4	213	7.7	213	2.1	14	215	2.1	176.611	-H450	063-32	
7.2	228	1.4	0.8	175	3.2	228	7.2	228	1.4	13	230	1.4	189.179	-H320	063-32	
7.0	235	2.6	0.7	181	3.1	235	7.0	235	2.6	13	237	2.5	194.892	-H600	063-32	
6.9	238	1.9	0.7	184	3.0	238	6.9	238	1.9	13	241	1.9	198.059	-H450	063-32	
6.9	239	0.9	0.7	184	3.0	239	6.9	239	0.9	12	242	0.9	198.873	-H210	063-32	
6.3	261	1.2	0.7	201	2.8	261	6.3	261	1.2	11	264	1.2	216.683	-H320	063-32	
6.2	267	2.0	0.7	206	2.7	267	6.2	267	2.0	11	270	2.0	221.794	-H600	063-32	
6.1	269	1.7	0.6	207	2.7	269	6.1	269	1.7	11	272	1.7	223.833	-H450	063-32	
5.5	296	1.1	0.6	228	2.4	296	5.5	296	1.1	10	299	1.1	246.137	-H320	063-32	
5.5	299	1.5	0.6	230	2.4	299	5.5	299	1.5	10	302	1.5	248.200	-H450	063-32	
5.5	300	2.0	0.6	231	2.4	300	5.5	300	2.0	9.9	303	2.0	249.089	-H600	063-32	

Selection tables, 4-pole motors

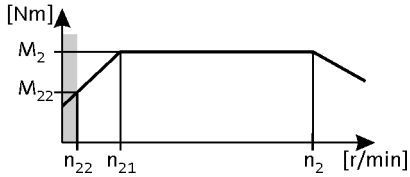

50 Hz: P_N = 0.18 kW
87 Hz: P_N = 0.33 kW

3-stage gearboxes

Mains operation 400 V, 50 Hz			Inverter operation 5 Hz -		- 20 Hz		- 50 Hz (1:10)			- 87 Hz (1:17.4)			i	Product		
n_2 [r/min]	M_2 [Nm]	c	n_{22} [r/min]	M_{22} [Nm]	n_{21} [r/min]	M_2 [Nm]	n_2 [r/min]	M_2 [Nm]	c	n_2 [r/min]	M_2 [Nm]	c		g500	MD□MA□□	
4.9	338	1.3	0.5	260	2.1	338	4.9	338	1.3	8.8	341	1.3	280.500	-H450	063-32	
4.2	394	1.1	0.4	303	1.8	394	4.2	394	1.1	7.6	398	1.1	326.994	-H450	063-32	
3.7	445	1.0	0.4	342	1.6	445	3.7	445	1.0	6.7	450	1.0	369.548	-H450	063-32	

Selection tables, 4-pole motors

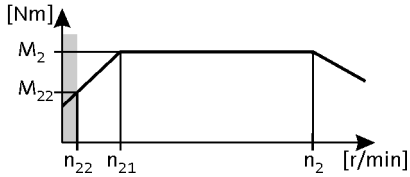

50 Hz: P_N = 0.25 kW
87 Hz: P_N = 0.45 kW

2-stage gearboxes

Mains operation 400 V, 50 Hz			Inverter operation 5 Hz -		- 20 Hz		- 50 Hz (1:10)			- 87 Hz (1:17.4)			i	Product		
n_2 [r/min]	M_2 [Nm]	c	n_{22} [r/min]	M_{22} [Nm]	n_{21} [r/min]	M_2 [Nm]	n_2 [r/min]	M_2 [Nm]	c	n_2 [r/min]	M_2 [Nm]	c		g500	MD□MA□□	
528	4.0	4.1	56	3.4	231	4.0	528	4.0	4.1	955	4.0	3.5	2.597	-H45	063-42	
419	6.0	5.6	44	4.3	184	5.0	419	6.0	5.6	759	5.0	4.8	3.267	-H140	063-42	
408	6.0	5.6	43	4.4	179	6.0	408	6.0	5.6	739	6.0	4.8	3.354	-H100	063-42	
401	6.0	3.3	43	4.4	176	6.0	401	6.0	3.3	727	6.0	2.8	3.413	-H45	063-42	
314	7.0	2.8	33	5.7	137	7.0	314	7.0	2.8	568	7.0	2.4	4.368	-H45	063-42	
306	8.0	5.6	32	5.8	134	8.0	306	8.0	5.6	554	8.0	4.8	4.480	-H140	063-42	
298	8.0	5.6	32	6.0	130	8.0	298	8.0	5.6	539	8.0	4.8	4.600	-H100	063-42	
265	9.0	5.6	28	6.7	116	9.0	265	9.0	5.6	480	9.0	4.8	5.167	-H100	063-42	
258	9.0	3.0	27	6.9	113	9.0	258	9.0	3.0	467	9.0	2.6	5.312	-H45	063-42	
239	10	5.2	25	7.5	105	10	239	10	5.2	433	10	4.4	5.733	-H140	063-42	
233	10	5.2	25	7.7	102	10	233	10	5.2	421	10	4.4	5.887	-H100	063-42	
230	10	2.9	24	7.8	101	10	230	10	2.9	416	10	2.5	5.965	-H45	063-42	
218	11	5.2	23	8.2	96	11	218	11	5.2	395	11	4.4	6.272	-H140	063-42	
213	11	5.2	23	8.4	93	11	213	11	5.2	385	11	4.4	6.440	-H100	063-42	
196	12	2.5	21	9.1	86	12	196	12	2.5	355	12	2.2	6.982	-H45	063-42	
193	12	5.6	21	9.2	85	12	193	12	5.6	350	12	4.8	7.086	-H100	063-42	
189	12	5.6	20	9.5	83	12	189	12	5.6	341	12	4.8	7.269	-H140	063-42	
175	13	2.4	19	10	77	13	175	13	2.4	316	13	2.1	7.840	-H45	063-42	
171	14	4.8	18	10	75	13	171	14	4.8	310	13	4.1	8.000	-H140	063-42	
167	14	4.8	18	11	73	14	167	14	4.8	302	14	4.1	8.214	-H100	063-42	
153	15	2.2	16	12	67	15	153	15	2.2	278	15	1.9	8.935	-H45	063-42	
152	15	5.6	16	12	67	15	152	15	5.6	275	15	4.8	9.029	-H140	063-42	
151	15	5.2	16	12	66	15	151	15	5.2	274	15	4.4	9.068	-H100	063-42	
140	17	4.3	15	13	61	16	140	17	4.3	253	16	3.7	9.800	-H140	063-42	
137	17	2.1	15	13	60	17	137	17	2.1	247	17	1.8	10.033	-H45	063-42	
136	17	4.3	14	13	60	17	136	17	4.3	247	17	3.7	10.063	-H100	063-42	
128	18	5.6	14	14	56	18	128	18	5.6	231	18	4.8	10.720	-H210	063-42	
121	19	5.2	13	15	53	19	121	19	5.2	218	19	4.4	11.360	-H100	063-42	
120	19	1.8	13	15	53	19	120	19	1.8	217	19	1.5	11.429	-H45	063-42	
119	20	5.2	13	15	52	19	119	20	5.2	215	19	4.4	11.554	-H140	063-42	
117	20	5.6	12	15	51	20	117	20	5.6	212	20	4.8	11.680	-H320	063-42	
114	20	5.6	12	16	50	20	114	20	5.6	207	20	4.8	12.000	-H210	063-42	
108	21	5.2	12	17	48	21	108	21	5.2	196	21	4.4	12.640	-H140	063-42	
108	21	4.7	12	17	47	21	108	21	4.7	196	21	4.0	12.653	-H100	063-42	
107	22	1.8	11	17	47	22	107	22	1.8	193	22	1.5	12.833	-H45	063-42	

Selection tables, 4-pole motors

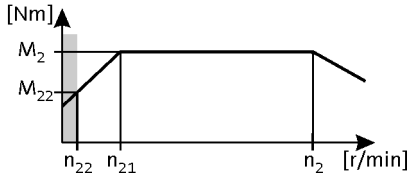

50 Hz: P_N = 0.25 kW
87 Hz: P_N = 0.45 kW

2-stage gearboxes

Mains operation 400 V, 50 Hz			Inverter operation 5 Hz -		- 20 Hz		- 50 Hz (1:10)			- 87 Hz (1:17.4)			i	Product		
n_2 [r/min]	M_2 [Nm]	c	n_{22} [r/min]	M_{22} [Nm]	n_{21} [r/min]	M_2 [Nm]	n_2 [r/min]	M_2 [Nm]	c	n_2 [r/min]	M_2 [Nm]	c		g500	MD□MA□□	
103	22	5.6	11	17	45	22	103	22	5.6	187	22	4.8	13.268	-H320	063-42	
100	23	5.2	11	18	44	23	100	23	5.2	181	23	4.4	13.673	-H210	063-42	
98	24	5.2	10	18	43	23	98	24	5.2	178	23	4.4	13.957	-H140	063-42	
95	24	4.1	10	19	41	24	95	24	4.1	171	24	3.5	14.490	-H100	063-42	
92	25	1.6	9.8	19	40	25	92	25	1.6	167	25	1.3	14.836	-H45	063-42	
92	25	5.2	9.7	19	40	25	92	25	5.2	167	25	4.4	14.898	-H320	063-42	
90	26	5.2	9.5	20	39	26	90	26	5.2	162	26	4.4	15.306	-H210	063-42	
88	26	3.8	9.4	20	39	26	88	26	3.8	160	26	3.3	15.500	-H100	063-42	
85	27	4.8	9.0	21	37	27	85	27	4.8	154	27	4.1	16.122	-H140	063-42	
82	28	1.5	8.7	22	36	28	82	28	1.5	149	28	1.4	16.660	-H45	063-42	
81	29	5.2	8.6	22	36	28	81	29	5.2	147	28	4.4	16.923	-H320	063-42	
77	30	3.3	8.2	23	34	30	77	30	3.3	140	30	2.8	17.750	-H100	063-42	
77	30	4.7	8.1	23	34	30	77	30	4.7	139	30	4.0	17.802	-H140	063-42	
72	32	1.3	7.6	25	32	32	72	32	1.3	130	32	1.3	19.013	-H45	063-42	
70	33	3.0	7.4	25	31	33	70	33	3.0	127	33	2.6	19.486	-H100	063-42	
69	33	4.2	7.3	26	30	33	69	33	4.2	126	33	3.6	19.750	-H140	063-42	
64	36	1.2	6.8	28	28	36	64	36	1.2	116	36	1.2	21.350	-H45	063-42	
63	37	4.3	6.7	28	28	37	63	37	4.3	114	37	3.7	21.802	-H210	063-42	
63	37	3.8	6.6	28	28	37	63	37	3.8	114	37	3.2	21.808	-H140	063-42	
61	38	2.7	6.5	29	27	38	61	38	2.7	111	38	2.3	22.314	-H100	063-42	
58	40	4.3	6.1	31	25	40	58	40	4.3	104	40	3.7	23.754	-H320	063-42	
56	41	4.3	5.9	32	25	41	56	41	4.3	102	41	3.7	24.405	-H210	063-42	
56	42	1.1	5.9	32	24	41	56	42	1.1	101	41	1.1	24.595	-H45	063-42	
55	42	3.3	5.8	32	24	42	55	42	3.3	100	42	2.8	24.829	-H140	063-42	
55	42	2.4	5.8	33	24	42	55	42	2.4	99	42	2.0	25.095	-H100	063-42	
51	46	4.3	5.4	35	22	45	51	46	4.3	92	45	4.2	26.983	-H320	063-42	
51	46	3.7	5.3	35	22	46	51	46	3.7	91	46	3.5	27.119	-H210	063-42	
50	46	3.0	5.3	36	22	46	50	46	3.0	91	46	2.9	27.415	-H140	063-42	
50	47	1.0	5.3	36	22	46	50	47	1.0	90	46	0.9	27.618	-H45	063-42	
48	49	2.1	5.0	37	21	48	48	49	2.1	86	48	2.0	28.738	-H100	063-42	
46	50	3.7	4.9	39	20	50	46	50	3.7	84	50	3.5	29.548	-H320	063-42	
45	51	3.7	4.8	40	20	51	45	51	3.7	82	51	3.5	30.357	-H210	063-42	
43	54	1.9	4.6	41	19	53	43	54	1.9	78	53	1.8	31.805	-H100	063-42	
43	54	2.6	4.5	42	19	54	43	54	2.6	78	54	2.5	31.976	-H140	063-42	
43	54	0.8	4.5	42	19	54	43	54	0.8				32.000	-H45	063-42	

Selection tables, 4-pole motors

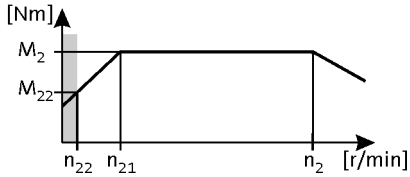

50 Hz: P_N = 0.25 kW
87 Hz: P_N = 0.45 kW

2-stage gearboxes

Mains operation 400 V, 50 Hz			Inverter operation 5 Hz -		- 20 Hz		- 50 Hz (1:10)			- 87 Hz (1:17.4)			i	Product		
n_2 [r/min]	M_2 [Nm]	c	n_{22} [r/min]	M_{22} [Nm]	n_{21} [r/min]	M_2 [Nm]	n_2 [r/min]	M_2 [Nm]	c	n_2 [r/min]	M_2 [Nm]	c		g500	MD□MA□□	
41	57	3.7	4.3	44	18	56	41	57	3.7	74	56	3.5	33.564	-H320	063-42	
39	59	3.3	4.1	46	17	59	39	59	3.3	71	59	3.2	35.095	-H210	063-42	
39	60	2.4	4.1	46	17	59	39	60	2.4	70	59	2.3	35.308	-H140	063-42	
38	60	3.7	4.1	47	17	60	38	60	3.7	70	60	3.5	35.689	-H450	063-42	
38	62	1.6	4.0	47	17	61	38	62	1.6	68	61	1.6	36.422	-H100	063-42	
36	65	3.3	3.8	50	16	64	36	65	3.3	65	64	3.2	38.238	-H320	063-42	
35	66	3.2	3.7	51	15	66	35	66	3.2	63	66	3.1	39.286	-H210	063-42	
34	67	1.2	3.6	52	15	67	34	67	1.2	62	67	1.2	39.857	-H100	063-42	
34	68	3.7	3.6	53	15	68	34	68	3.7	62	68	3.7	40.333	-H450	063-42	
34	69	2.0	3.6	53	15	68	34	69	2.0	61	68	2.1	40.526	-H140	063-42	
34	69	3.7	3.6	53	15	68	34	69	3.7	61	68	3.7	40.578	-H600	063-42	
32	72	2.5	3.4	55	14	72	32	72	2.5	58	72	2.6	42.593	-H210	063-42	
32	73	3.2	3.3	56	14	73	32	73	3.2	57	73	3.2	43.313	-H450	063-42	
32	73	3.3	3.3	57	14	73	32	73	3.3	57	73	3.3	43.436	-H320	063-42	
31	76	1.9	3.2	58	13	75	31	76	1.9	55	75	1.9	44.748	-H140	063-42	
30	77	3.7	3.2	59	13	77	30	77	3.7	54	77	3.7	45.571	-H600	063-42	
30	77	1.2	3.2	59	13	77	30	77	1.2	54	77	1.2	45.643	-H100	063-42	
30	78	2.8	3.1	60	13	78	30	78	2.8	53	78	2.8	46.407	-H320	063-42	
29	81	2.6	3.0	62	13	80	29	81	2.6	52	80	2.6	47.679	-H210	063-42	
28	83	3.2	3.0	64	12	82	28	83	3.2	51	82	3.2	48.950	-H450	063-42	
28	83	3.2	2.9	64	12	83	28	83	3.2	50	83	3.2	49.247	-H600	063-42	
27	86	1.2	2.9	66	12	85	27	86	1.2	49	85	1.2	50.786	-H140	063-42	
26	89	2.8	2.8	69	11	89	26	89	2.8	47	89	2.8	52.715	-H320	063-42	
25	92	1.4	2.7	71	11	92	25	92	1.4	46	92	1.4	54.438	-H210	063-42	
25	93	2.6	2.6	71	11	92	25	93	2.6	45	92	2.6	54.750	-H450	063-42	
25	94	3.2	2.6	72	11	93	25	94	3.2	45	93	3.2	55.307	-H600	063-42	
24	95	1.2	2.6	73	11	94	24	95	1.2	44	94	1.2	56.077	-H140	063-42	
23	103	1.4	2.4	79	9.8	102	23	103	1.4	41	102	1.4	60.938	-H210	063-42	
22	105	2.6	2.3	81	9.7	104	22	105	2.6	40	104	2.6	61.875	-H450	063-42	
22	105	2.6	2.3	81	9.6	105	22	105	2.6	40	105	2.6	62.250	-H600	063-42	
20	118	2.6	2.1	91	8.6	118	20	118	2.6	36	118	2.6	69.911	-H600	063-42	

Selection tables, 4-pole motors

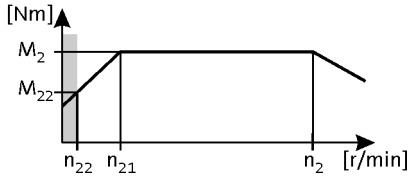

50 Hz: P_N = 0.25 kW
87 Hz: P_N = 0.45 kW

3-stage gearboxes

Mains operation 400 V, 50 Hz			Inverter operation 5 Hz -		- 20 Hz		- 50 Hz (1:10)			- 87 Hz (1:17.4)			i	Product		
n_2 [r/min]	M_2 [Nm]	c	n_{22} [r/min]	M_{22} [Nm]	n_{21} [r/min]	M_2 [Nm]	n_2 [r/min]	M_2 [Nm]	c	n_2 [r/min]	M_2 [Nm]	c		g500	MD□MA□□	
32	72	2.9	3.3	56	14	72	32	72	2.9	57	72	2.5	43.390	-H210	063-42	
31	73	5.6	3.3	56	14	72	31	73	5.6	57	72	4.8	43.676	-H600	063-42	
31	73	5.6	3.3	57	14	73	31	73	5.6	56	73	4.8	44.124	-H450	063-42	
29	79	4.1	3.1	61	13	78	29	79	4.1	53	78	3.9	47.276	-H320	063-42	
28	81	2.6	3.0	62	12	80	28	81	2.6	51	80	2.5	48.571	-H210	063-42	
28	82	5.6	3.0	63	12	81	28	82	5.6	51	81	5.4	49.051	-H600	063-42	
28	83	5.4	2.9	64	12	83	28	83	5.4	50	83	5.2	49.867	-H450	063-42	
26	89	3.6	2.7	69	11	89	26	89	3.6	46	89	3.5	53.703	-H320	063-42	
25	92	2.3	2.6	71	11	92	25	92	2.3	45	92	2.2	55.529	-H210	063-42	
25	93	5.2	2.6	71	11	92	25	93	5.2	45	92	5.1	55.710	-H600	063-42	
24	94	4.8	2.6	72	11	94	24	94	4.8	44	94	4.6	56.469	-H450	063-42	
23	101	3.2	2.4	78	9.9	100	23	101	3.2	41	100	3.1	60.502	-H320	063-42	
22	103	4.4	2.3	79	9.7	102	22	103	4.4	40	102	4.2	61.774	-H450	063-42	
22	104	2.0	2.3	80	9.7	103	22	104	2.0	40	103	2.0	62.160	-H210	063-42	
22	104	5.2	2.3	80	9.6	104	22	104	5.2	40	104	5.1	62.566	-H600	063-42	
20	114	2.8	2.1	88	8.7	114	20	114	2.8	36	114	2.7	68.726	-H320	063-42	
20	116	3.9	2.1	90	8.6	116	20	116	3.9	36	116	3.7	69.813	-H450	063-42	
19	118	1.8	2.0	91	8.4	118	19	118	1.8	35	118	1.7	71.026	-H210	063-42	
18	129	2.5	1.9	99	7.8	128	18	129	2.5	32	128	2.4	77.387	-H320	063-42	
17	131	3.4	1.8	101	7.6	130	17	131	3.4	32	130	3.3	78.794	-H450	063-42	
17	132	1.6	1.8	102	7.5	132	17	132	1.6	31	132	1.5	79.507	-H210	063-42	
16	146	2.2	1.6	113	6.8	146	16	146	2.2	28	146	2.2	87.906	-H320	063-42	
15	148	4.1	1.6	114	6.8	147	15	148	4.1	28	147	4.1	88.826	-H600	063-42	
15	148	3.0	1.6	114	6.7	147	15	148	3.0	28	147	3.1	89.048	-H450	063-42	
15	154	1.4	1.6	118	6.5	153	15	154	1.4	27	153	1.4	92.205	-H210	063-42	
14	161	2.8	1.5	124	6.2	160	14	161	2.8	26	160	2.8	96.522	-H450	063-42	
14	166	3.6	1.5	128	6.0	165	14	166	3.6	25	165	3.6	99.757	-H600	063-42	
14	167	1.9	1.4	129	6.0	166	14	167	1.9	25	166	1.9	100.462	-H320	063-42	
13	172	1.2	1.4	132	5.8	171	13	172	1.2	24	171	1.2	103.214	-H210	063-42	
13	182	2.5	1.3	140	5.5	181	13	182	2.5	23	181	2.5	109.083	-H450	063-42	
12	184	3.3	1.3	142	5.4	183	12	184	3.3	22	183	3.3	110.491	-H600	063-42	
12	190	1.7	1.3	146	5.3	189	12	190	1.7	22	189	1.7	114.118	-H320	063-42	
12	197	1.1	1.2	152	5.1	196	12	197	1.1	21	196	1.1	118.162	-H210	063-42	
11	202	2.2	1.2	156	4.9	201	11	202	2.2	20	201	2.2	121.342	-H450	063-42	
11	207	2.9	1.2	159	4.8	205	11	207	2.9	20	205	2.9	124.088	-H600	063-42	

Selection tables, 4-pole motors

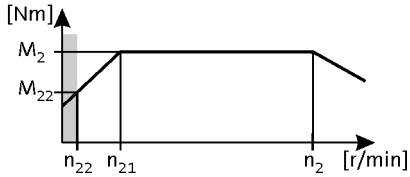

50 Hz: P_N = 0.25 kW
87 Hz: P_N = 0.45 kW

3-stage gearboxes

Mains operation 400 V, 50 Hz			Inverter operation 5 Hz -		- 20 Hz		- 50 Hz (1:10)			- 87 Hz (1:17.4)			i	Product		
n_2 [r/min]	M_2 [Nm]	c	n_{22} [r/min]	M_{22} [Nm]	n_{21} [r/min]	M_2 [Nm]	n_2 [r/min]	M_2 [Nm]	c	n_2 [r/min]	M_2 [Nm]	c		g500	MD□MA□□	
11	214	1.5	1.1	165	4.7	213	11	214	1.5	19	213	1.5	128.743	-H320	063-42	
10	220	1.0	1.1	170	4.5	219	10	220	1.0	19	219	1.0	132.270	-H210	063-42	
10	225	3.7	1.1	174	4.4	224	10	225	3.7	18	224	3.7	135.373	-H850	063-42	
10	228	2.0	1.1	176	4.4	227	10	228	2.0	18	227	2.0	137.133	-H450	063-42	
9.6	238	2.5	1.0	183	4.2	237	9.6	238	2.5	17	237	2.5	142.988	-H600	063-42	
9.4	244	1.3	1.0	188	4.1	242	9.4	244	1.3	17	242	1.3	146.244	-H320	063-42	
9.1	252	3.4	1.0	194	4.0	250	9.1	252	3.4	16	250	3.4	151.262	-H850	063-42	
9.0	255	0.8	0.9	196	3.9	253	9.0	255	0.8	16	253	0.8	152.853	-H210	063-42	
8.8	260	1.7	0.9	200	3.8	259	8.8	260	1.7	16	259	1.7	156.274	-H450	063-42	
8.5	267	2.2	0.9	206	3.7	266	8.5	267	2.2	15	266	2.3	160.585	-H600	063-42	
8.3	274	3.1	0.9	211	3.7	272	8.3	274	3.1	15	272	3.1	164.294	-H850	063-42	
8.2	277	1.2	0.9	214	3.6	276	8.2	277	1.2	15	276	1.2	166.541	-H320	063-42	
7.9	289	2.1	0.8	223	3.5	287	7.9	289	2.1	14	287	2.1	173.536	-H600	063-42	
7.8	294	1.5	0.8	227	3.4	292	7.8	294	1.5	14	292	1.5	176.611	-H450	063-42	
7.5	306	2.8	0.8	235	3.3	304	7.5	306	2.8	14	304	2.8	183.577	-H850	063-42	
7.2	315	1.0	0.8	243	3.2	313	7.2	315	1.0	13	313	1.0	189.179	-H320	063-42	
7.0	325	1.9	0.7	250	3.1	323	7.0	325	1.9	13	323	1.9	194.892	-H600	063-42	
6.9	330	1.4	0.7	254	3.0	328	6.9	330	1.4	13	328	1.4	198.059	-H450	063-42	
6.6	346	2.5	0.7	266	2.9	344	6.6	346	2.5	12	344	2.5	207.675	-H850	063-42	
6.3	361	0.9	0.7	278	2.8	359	6.3	361	0.9	11	359	0.9	216.683	-H320	063-42	
6.2	369	1.4	0.7	284	2.7	367	6.2	369	1.4	11	367	1.4	221.794	-H600	063-42	
6.1	373	1.2	0.6	287	2.7	371	6.1	373	1.2	11	371	1.2	223.833	-H450	063-42	
5.9	386	2.2	0.6	298	2.6	384	5.9	386	2.2	11	384	2.2	232.050	-H850	063-42	
5.5	413	1.1	0.6	318	2.4	411	5.5	413	1.1	10	411	1.1	248.200	-H450	063-42	
5.5	415	1.4	0.6	319	2.4	412	5.5	415	1.4	10	412	1.4	249.089	-H600	063-42	
4.9	467	1.0	0.5	360	2.1	464	4.9	467	1.0	8.8	464	1.0	280.500	-H450	063-42	

Selection tables, 4-pole motors

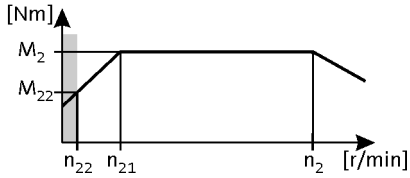

50 Hz: P_N = 0.37 kW
87 Hz: P_N = 0.66 kW

2-stage gearboxes

Mains operation 400 V, 50 Hz			Inverter operation 5 Hz -		- 20 Hz		- 50 Hz (1:10)			- 87 Hz (1:17.4)			i	Product		
n_2 [r/min]	M_2 [Nm]	c	n_{22} [r/min]	M_{22} [Nm]	n_{21} [r/min]	M_2 [Nm]	n_2 [r/min]	M_2 [Nm]	c	n_2 [r/min]	M_2 [Nm]	c		g500	MD□MA□□	
543	6.0	2.9	56	4.9	231	6.0	543	6.0	2.9	970	6.0	2.4	2.597	-H45	071-32	
432	8.0	4.9	44	6.1	184	8.0	432	8.0	4.9	771	8.0	4.1	3.267	-H140	071-32	
420	8.0	4.9	43	6.3	179	8.0	420	8.0	4.9	751	8.0	4.1	3.354	-H100	071-32	
413	8.0	2.3	43	6.4	176	8.0	413	8.0	2.3	738	8.0	1.9	3.413	-H45	071-32	
323	11	2.0	33	8.2	137	11	323	11	2.0	577	11	1.7	4.368	-H45	071-32	
315	11	4.9	32	8.4	134	11	315	11	4.9	563	11	4.1	4.480	-H140	071-32	
307	11	4.9	32	8.6	130	11	307	11	4.9	548	11	4.1	4.600	-H100	071-32	
273	13	4.9	28	9.7	116	13	273	13	4.9	488	13	4.1	5.167	-H100	071-32	
265	13	2.1	27	9.9	113	13	265	13	2.1	474	13	1.8	5.312	-H45	071-32	
246	14	4.5	25	11	105	14	246	14	4.5	440	14	3.8	5.733	-H140	071-32	
240	14	4.5	25	11	102	14	240	14	4.5	428	14	3.8	5.887	-H100	071-32	
236	15	2.0	24	11	101	14	236	15	2.0	422	14	1.7	5.965	-H45	071-32	
225	15	4.5	23	12	96	15	225	15	4.5	402	15	3.8	6.272	-H140	071-32	
219	16	4.5	23	12	93	16	219	16	4.5	391	16	3.8	6.440	-H100	071-32	
202	17	1.8	21	13	86	17	202	17	1.8	361	17	1.5	6.982	-H45	071-32	
199	17	4.9	21	13	85	17	199	17	4.9	356	17	4.1	7.086	-H100	071-32	
194	18	4.9	20	14	83	18	194	18	4.9	347	18	4.1	7.269	-H140	071-32	
180	19	1.7	19	15	77	19	180	19	1.7	321	19	1.4	7.840	-H45	071-32	
176	19	4.2	18	15	75	19	176	19	4.2	315	19	3.5	8.000	-H140	071-32	
172	20	4.2	18	15	73	20	172	20	4.2	307	20	3.5	8.214	-H100	071-32	
158	22	1.5	16	17	67	22	158	22	1.5	282	22	1.3	8.935	-H45	071-32	
156	22	4.9	16	17	67	22	156	22	4.9	279	22	4.1	9.029	-H140	071-32	
156	22	4.4	16	17	66	22	156	22	4.4	278	22	3.7	9.068	-H100	071-32	
144	24	3.7	15	18	61	24	144	24	3.7	257	24	3.2	9.800	-H140	071-32	
141	24	1.4	15	19	60	24	141	24	1.4	251	24	1.2	10.033	-H45	071-32	
140	24	3.7	14	19	60	24	140	24	3.7	250	24	3.2	10.063	-H100	071-32	
132	26	4.9	14	20	56	26	132	26	4.9	235	26	4.1	10.720	-H210	071-32	
124	28	3.6	13	21	53	28	124	28	3.6	222	28	3.1	11.360	-H100	071-32	
123	28	1.3	13	21	53	28	123	28	1.3	221	28	1.1	11.429	-H45	071-32	
122	28	4.5	13	22	52	28	122	28	4.5	218	28	3.8	11.554	-H140	071-32	
121	28	4.9	12	22	51	28	121	28	4.9	216	28	4.1	11.680	-H320	071-32	
118	29	4.9	12	23	50	29	118	29	4.9	210	29	4.1	12.000	-H210	071-32	
112	31	4.3	12	24	48	31	112	31	4.3	199	31	3.6	12.640	-H140	071-32	
111	31	3.3	12	24	47	31	111	31	3.3	199	31	2.7	12.653	-H100	071-32	
110	31	1.2	11	24	47	31	110	31	1.2	196	31	1.0	12.833	-H45	071-32	

Selection tables, 4-pole motors

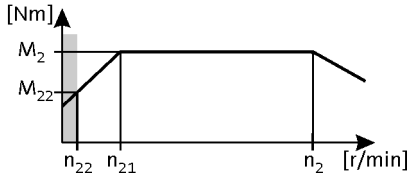

50 Hz: P_N = 0.37 kW
87 Hz: P_N = 0.66 kW

2-stage gearboxes

Mains operation 400 V, 50 Hz			Inverter operation 5 Hz -		- 20 Hz		- 50 Hz (1:10)			- 87 Hz (1:17.4)			i	Product		
n_2 [r/min]	M_2 [Nm]	c	n_{22} [r/min]	M_{22} [Nm]	n_{21} [r/min]	M_2 [Nm]	n_2 [r/min]	M_2 [Nm]	c	n_2 [r/min]	M_2 [Nm]	c		g500	MD□MA□□	
106	32	4.9	11	25	45	32	106	32	4.9	190	32	4.1	13.268	-H320	071-32	
103	33	4.5	11	26	44	33	103	33	4.5	184	33	3.8	13.673	-H210	071-32	
101	34	4.0	10	26	43	34	101	34	4.0	181	34	3.4	13.957	-H140	071-32	
97	35	2.8	10	27	41	35	97	35	2.8	174	35	2.4	14.490	-H100	071-32	
95	36	1.1	9.8	28	40	36	95	36	1.1	170	36	0.9	14.836	-H45	071-32	
95	36	4.5	9.7	28	40	36	95	36	4.5	169	36	3.8	14.898	-H320	071-32	
92	37	4.5	9.5	29	39	37	92	37	4.5	165	37	3.8	15.306	-H210	071-32	
91	38	2.7	9.4	29	39	38	91	38	2.7	163	38	2.2	15.500	-H100	071-32	
88	39	3.6	9.0	30	37	39	88	39	3.6	156	39	3.0	16.122	-H140	071-32	
85	41	1.0	8.7	31	36	40	85	41	1.0	151	40	1.0	16.660	-H45	071-32	
83	41	4.5	8.6	32	36	41	83	41	4.5	149	41	3.8	16.923	-H320	071-32	
79	43	2.3	8.2	33	34	43	79	43	2.3	142	43	2.0	17.750	-H100	071-32	
79	43	3.2	8.1	33	34	43	79	43	3.2	142	43	2.7	17.802	-H140	071-32	
74	46	0.9	7.6	36	32	46	74	46	0.9	133	46	0.9	19.013	-H45	071-32	
72	47	2.1	7.4	37	31	47	72	47	2.1	129	47	1.8	19.486	-H100	071-32	
71	48	2.9	7.3	37	30	48	71	48	2.9	128	48	2.5	19.750	-H140	071-32	
66	52	0.9	6.8	40	28	52	66	52	0.9	118	52	0.8	21.350	-H45	071-32	
65	53	3.7	6.7	41	28	53	65	53	3.7	116	53	3.2	21.802	-H210	071-32	
65	53	2.6	6.6	41	28	53	65	53	2.6	116	53	2.2	21.808	-H140	071-32	
63	54	1.8	6.5	42	27	54	63	54	1.8	113	54	1.6	22.314	-H100	071-32	
59	58	3.7	6.1	45	25	58	59	58	3.7	106	58	3.2	23.754	-H320	071-32	
58	59	3.5	5.9	46	25	59	58	59	3.5	103	59	3.0	24.405	-H210	071-32	
57	60	2.3	5.8	47	24	60	57	60	2.3	102	60	2.0	24.829	-H140	071-32	
56	61	1.6	5.8	47	24	61	56	61	1.6	100	61	1.4	25.095	-H100	071-32	
52	66	3.7	5.4	51	22	65	52	66	3.7	93	65	3.6	26.983	-H320	071-32	
52	66	3.2	5.3	51	22	66	52	66	3.2	93	66	3.0	27.119	-H210	071-32	
51	67	2.1	5.3	51	22	67	51	67	2.1	92	67	2.0	27.415	-H140	071-32	
49	70	1.4	5.0	54	21	70	49	70	1.4	88	70	1.4	28.738	-H100	071-32	
48	72	3.2	4.9	55	20	72	48	72	3.2	85	72	3.0	29.548	-H320	071-32	
46	74	2.9	4.8	57	20	74	46	74	2.9	83	74	2.7	30.357	-H210	071-32	
44	77	1.3	4.6	60	19	77	44	77	1.3	79	77	1.2	31.805	-H100	071-32	
44	78	1.8	4.5	60	19	78	44	78	1.8	79	78	1.7	31.976	-H140	071-32	
42	82	3.2	4.3	63	18	81	42	82	3.2	75	81	3.0	33.564	-H320	071-32	
40	85	2.5	4.1	66	17	85	40	85	2.5	72	85	2.4	35.095	-H210	071-32	
40	86	1.6	4.1	66	17	86	40	86	1.6	71	86	1.6	35.308	-H140	071-32	

Selection tables, 4-pole motors

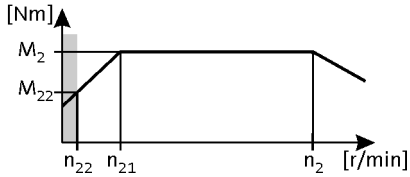

50 Hz: P_N = 0.37 kW
87 Hz: P_N = 0.66 kW

2-stage gearboxes

Mains operation 400 V, 50 Hz			Inverter operation 5 Hz -		- 20 Hz		- 50 Hz (1:10)			- 87 Hz (1:17.4)			i	Product		
n_2 [r/min]	M_2 [Nm]	c	n_{22} [r/min]	M_{22} [Nm]	n_{21} [r/min]	M_2 [Nm]	n_2 [r/min]	M_2 [Nm]	c	n_2 [r/min]	M_2 [Nm]	c		g500	MD□MA□□	
40	87	3.2	4.1	67	17	87	40	87	3.2	71	87	3.0	35.689	-H450	071-32	
39	89	1.1	4.0	68	17	88	39	89	1.1	69	88	1.1	36.422	-H100	071-32	
37	93	2.7	3.8	72	16	93	37	93	2.7	66	93	2.6	38.238	-H320	071-32	
36	96	2.2	3.7	74	15	95	36	96	2.2	64	95	2.1	39.286	-H210	071-32	
35	97	1.0	3.6	75	15	97	35	97	1.0	63	97	1.0	39.857	-H100	071-32	
35	98	3.2	3.6	76	15	98	35	98	3.2	63	98	3.2	40.333	-H450	071-32	
35	99	1.4	3.6	76	15	98	35	99	1.4	62	98	1.4	40.526	-H140	071-32	
35	99	3.2	3.6	76	15	98	35	99	3.2	62	98	3.2	40.578	-H600	071-32	
33	104	1.8	3.4	80	14	103	33	104	1.8	59	103	1.8	42.593	-H210	071-32	
33	105	2.8	3.3	81	14	105	33	105	2.8	58	105	2.8	43.313	-H450	071-32	
33	106	2.7	3.3	81	14	105	33	106	2.7	58	105	2.7	43.436	-H320	071-32	
32	109	1.3	3.2	84	13	109	32	109	1.3	56	109	1.3	44.748	-H140	071-32	
31	111	3.2	3.2	85	13	111	31	111	3.2	55	111	3.2	45.571	-H600	071-32	
31	111	0.9	3.2	85	13	111	31	111	0.9	55	111	0.9	45.643	-H100	071-32	
30	113	1.9	3.1	87	13	113	30	113	1.9	54	113	1.9	46.407	-H320	071-32	
30	116	1.8	3.0	89	13	116	30	116	1.8	53	116	1.8	47.679	-H210	071-32	
29	119	2.8	3.0	92	12	119	29	119	2.8	52	119	2.8	48.950	-H450	071-32	
29	120	2.8	2.9	92	12	119	29	120	2.8	51	119	2.8	49.247	-H600	071-32	
28	123	1.1	2.9	95	12	123	28	123	1.1	50	123	1.1	50.786	-H140	071-32	
27	128	1.9	2.8	99	11	128	27	128	1.9	48	128	1.9	52.715	-H320	071-32	
26	132	1.0	2.7	102	11	132	26	132	1.0	46	132	1.0	54.438	-H210	071-32	
26	133	2.1	2.6	103	11	133	26	133	2.1	46	133	2.1	54.750	-H450	071-32	
26	134	2.8	2.6	104	11	134	26	134	2.8	46	134	2.8	55.307	-H600	071-32	
25	136	1.0	2.6	105	11	136	25	136	1.0	45	136	1.0	56.077	-H140	071-32	
23	148	1.1	2.4	114	9.8	148	23	148	1.1	41	148	1.1	60.938	-H210	071-32	
23	150	2.0	2.3	116	9.7	150	23	150	2.0	41	150	2.0	61.875	-H450	071-32	
23	151	2.2	2.3	117	9.6	151	23	151	2.2	41	151	2.3	62.250	-H600	071-32	
20	170	2.2	2.1	131	8.6	170	20	170	2.2	36	170	2.3	69.911	-H600	071-32	

3-stage gearboxes

Mains operation 400 V, 50 Hz			Inverter operation 5 Hz -		- 20 Hz		- 50 Hz (1:10)			- 87 Hz (1:17.4)			i	Product		
n_2 [r/min]	M_2 [Nm]	c	n_{22} [r/min]	M_{22} [Nm]	n_{21} [r/min]	M_2 [Nm]	n_2 [r/min]	M_2 [Nm]	c	n_2 [r/min]	M_2 [Nm]	c		g500	MD□MA□□	
33	104	2.0	3.3	80	14	104	33	104	2.0	58	104	1.7	43.390	-H210	071-32	
32	105	4.9	3.3	81	14	104	32	105	4.9	58	104	4.1	43.676	-H600	071-32	
32	106	4.3	3.3	81	14	105	32	106	4.3	57	105	3.6	44.124	-H450	071-32	
30	113	2.8	3.1	87	13	113	30	113	2.8	53	113	2.7	47.276	-H320	071-32	
29	116	1.8	3.0	90	12	116	29	116	1.8	52	116	1.7	48.571	-H210	071-32	
29	117	4.9	3.0	90	12	117	29	117	4.9	51	117	4.7	49.051	-H600	071-32	
28	119	3.8	2.9	92	12	119	28	119	3.8	51	119	3.6	49.867	-H450	071-32	

Selection tables, 4-pole motors

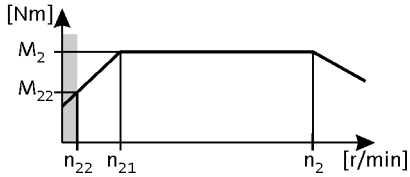

50 Hz: P_N = 0.37 kW
87 Hz: P_N = 0.66 kW

3-stage gearboxes

Mains operation 400 V, 50 Hz			Inverter operation 5 Hz -		- 20 Hz		- 50 Hz (1:10)			- 87 Hz (1:17.4)			i	Product		
n_2 [r/min]	M_2 [Nm]	c	n_{22} [r/min]	M_{22} [Nm]	n_{21} [r/min]	M_2 [Nm]	n_2 [r/min]	M_2 [Nm]	c	n_2 [r/min]	M_2 [Nm]	c		g500	MD□MA□□	
26	129	2.5	2.7	99	11	128	26	129	2.5	47	128	2.4	53.703	-H320	071-32	
25	133	1.6	2.6	102	11	133	25	133	1.6	45	133	1.5	55.529	-H210	071-32	
25	133	4.5	2.6	103	11	133	25	133	4.5	45	133	4.3	55.710	-H600	071-32	
25	135	3.3	2.6	104	11	135	25	135	3.3	45	135	3.2	56.469	-H450	071-32	
23	145	2.2	2.4	112	9.9	145	23	145	2.2	42	145	2.1	60.502	-H320	071-32	
23	148	3.0	2.3	114	9.7	148	23	148	3.0	41	148	2.9	61.774	-H450	071-32	
23	149	1.4	2.3	115	9.7	149	23	149	1.4	41	149	1.4	62.160	-H210	071-32	
23	150	4.0	2.3	115	9.6	150	23	150	4.0	40	150	3.8	62.566	-H600	071-32	
21	165	1.9	2.1	127	8.7	164	21	165	1.9	37	164	1.9	68.726	-H320	071-32	
20	167	2.7	2.1	129	8.6	167	20	167	2.7	36	167	2.6	69.813	-H450	071-32	
20	170	1.2	2.0	131	8.4	170	20	170	1.2	36	170	1.2	71.026	-H210	071-32	
18	185	1.7	1.9	143	7.8	185	18	185	1.7	33	185	1.7	77.387	-H320	071-32	
18	189	2.4	1.8	145	7.6	188	18	189	2.4	32	188	2.3	78.794	-H450	071-32	
18	190	1.1	1.8	147	7.5	190	18	190	1.1	32	190	1.1	79.507	-H210	071-32	
16	211	1.5	1.6	162	6.8	210	16	211	1.5	29	210	1.5	87.906	-H320	071-32	
16	213	2.8	1.6	164	6.8	212	16	213	2.8	28	212	2.8	88.826	-H600	071-32	
16	213	2.1	1.6	164	6.7	213	16	213	2.1	28	213	2.1	89.048	-H450	071-32	
15	221	1.0	1.6	170	6.5	220	15	221	1.0	27	220	1.0	92.205	-H210	071-32	
15	231	2.0	1.5	178	6.2	231	15	231	2.0	26	231	2.0	96.522	-H450	071-32	
14	239	2.5	1.5	184	6.0	238	14	239	2.5	25	238	2.5	99.757	-H600	071-32	
14	241	1.3	1.4	185	6.0	240	14	241	1.3	25	240	1.3	100.462	-H320	071-32	
14	247	0.9	1.4	190	5.8	247	14	247	0.9	24	247	0.9	103.214	-H210	071-32	
13	261	1.7	1.3	201	5.5	261	13	261	1.7	23	261	1.7	109.083	-H450	071-32	
13	265	2.3	1.3	204	5.4	264	13	265	2.3	23	264	2.3	110.491	-H600	071-32	
12	273	1.2	1.3	210	5.3	273	12	273	1.2	22	273	1.2	114.118	-H320	071-32	
12	291	1.6	1.2	224	4.9	290	12	291	1.6	21	290	1.6	121.342	-H450	071-32	
11	297	2.0	1.2	229	4.8	297	11	297	2.0	20	297	2.0	124.088	-H600	071-32	
11	308	1.0	1.1	237	4.7	308	11	308	1.0	20	308	1.0	128.743	-H320	071-32	
10	324	2.6	1.1	250	4.4	324	10	324	2.6	19	324	2.6	135.373	-H850	071-32	
10	328	1.4	1.1	253	4.4	328	10	328	1.4	18	328	1.4	137.133	-H450	071-32	
9.9	342	1.8	1.0	264	4.2	342	9.9	342	1.8	18	342	1.8	142.988	-H600	071-32	
9.6	350	0.9	1.0	270	4.1	350	9.6	350	0.9	17	350	0.9	146.244	-H320	071-32	
9.3	362	2.4	1.0	279	4.0	362	9.3	362	2.4	17	362	2.4	151.262	-H850	071-32	
9.0	374	1.2	0.9	288	3.8	374	9.0	374	1.2	16	374	1.2	156.274	-H450	071-32	
8.8	385	1.6	0.9	296	3.7	384	8.8	385	1.6	16	384	1.6	160.585	-H600	071-32	

Selection tables, 4-pole motors

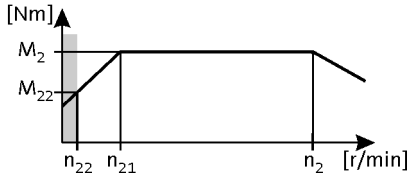

50 Hz: P_N = 0.37 kW
87 Hz: P_N = 0.66 kW

3-stage gearboxes

Mains operation 400 V, 50 Hz			Inverter operation 5 Hz -		- 20 Hz		- 50 Hz (1:10)			- 87 Hz (1:17.4)			i	Product		
n_2 [r/min]	M_2 [Nm]	c	n_{22} [r/min]	M_{22} [Nm]	n_{21} [r/min]	M_2 [Nm]	n_2 [r/min]	M_2 [Nm]	c	n_2 [r/min]	M_2 [Nm]	c		g500	MD□MA□□	
8.6	393	2.2	0.9	303	3.7	393	8.6	393	2.2	15	393	2.2	164.294	-H850	071-32	
8.1	416	1.4	0.8	320	3.5	415	8.1	416	1.4	15	415	1.5	173.536	-H600	071-32	
8.0	423	1.1	0.8	326	3.4	422	8.0	423	1.1	14	422	1.1	176.611	-H450	071-32	
7.7	440	1.9	0.8	339	3.3	439	7.7	440	1.9	14	439	1.9	183.577	-H850	071-32	
7.2	467	1.3	0.7	359	3.1	466	7.2	467	1.3	13	466	1.3	194.892	-H600	071-32	
7.1	474	1.0	0.7	365	3.0	473	7.1	474	1.0	13	473	1.0	198.059	-H450	071-32	
6.8	497	1.7	0.7	383	2.9	496	6.8	497	1.7	12	496	1.7	207.675	-H850	071-32	
6.4	531	1.1	0.7	409	2.7	530	6.4	531	1.1	11	530	1.1	221.794	-H600	071-32	
6.3	536	0.8	0.6	413	2.7	535	6.3	536	0.8	11	535	0.8	223.833	-H450	071-32	
6.1	556	1.5	0.6	428	2.6	555	6.1	556	1.5	11	555	1.5	232.050	-H850	071-32	
5.7	597	1.0	0.6	459	2.4	595	5.7	597	1.0	10	595	1.0	249.089	-H600	071-32	

Selection tables, 4-pole motors

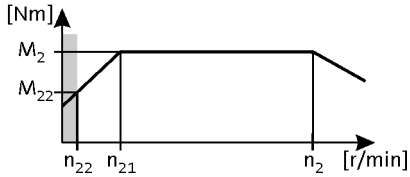

50 Hz: P_N = 0.55 kW
87 Hz: P_N = 1.0 kW

2-stage gearboxes

Mains operation 400 V, 50 Hz			Inverter operation 5 Hz -		- 20 Hz		- 50 Hz (1:10)			- 87 Hz (1:17.4)			i	Product		
n_2 [r/min]	M_2 [Nm]	c	n_{22} [r/min]	M_{22} [Nm]	n_{21} [r/min]	M_2 [Nm]	n_2 [r/min]	M_2 [Nm]	c	n_2 [r/min]	M_2 [Nm]	c		g500	MD□MA□□	
541	9.0	1.9	56	7.3	231	10	541	9.0	1.9	968	10	1.6	2.597	-H45	071-42	
430	12	4.5	44	9.1	184	12	430	12	4.5	770	12	3.8	3.267	-H140	071-42	
419	12	4.5	43	9.4	179	12	419	12	4.5	750	12	3.8	3.354	-H100	071-42	
415	12	5.1	43	9.5	177	12	415	12	5.1	742	12	4.3	3.389	-H210	071-42	
415	12	5.1	43	9.5	177	12	415	12	5.1	742	12	4.3	3.389	-H320	071-42	
412	12	1.5	43	9.5	176	12	412	12	1.5	737	13	1.3	3.413	-H45	071-42	
322	16	1.3	33	12	137	16	322	16	1.3	576	16	1.1	4.368	-H45	071-42	
314	16	4.5	32	13	134	16	314	16	4.5	561	17	3.8	4.480	-H140	071-42	
305	17	4.3	32	13	130	17	305	17	4.3	547	17	3.6	4.600	-H100	071-42	
272	19	4.0	28	14	116	19	272	19	4.0	487	19	3.3	5.167	-H100	071-42	
265	19	1.4	27	15	113	19	265	19	1.4	473	20	1.2	5.312	-H45	071-42	
252	20	5.1	26	16	108	20	252	20	5.1	450	21	4.3	5.583	-H210	071-42	
245	21	4.2	25	16	105	21	245	21	4.2	439	21	3.5	5.733	-H140	071-42	
239	21	3.8	25	16	102	21	239	21	3.8	427	22	3.1	5.887	-H100	071-42	
236	22	1.3	24	17	101	22	236	22	1.3	422	22	1.1	5.965	-H45	071-42	
231	22	5.1	24	17	99	22	231	22	5.1	413	22	4.3	6.083	-H320	071-42	
225	23	5.1	23	18	96	23	225	23	5.1	402	23	4.3	6.250	-H210	071-42	
224	23	4.2	23	18	96	23	224	23	4.2	401	23	3.5	6.272	-H140	071-42	
218	23	3.6	23	18	93	23	218	23	3.6	391	24	2.9	6.440	-H100	071-42	
203	25	5.1	21	19	87	25	203	25	5.1	364	25	4.3	6.910	-H320	071-42	
201	25	1.2	21	20	86	25	201	25	1.2	360	26	1.0	6.982	-H45	071-42	
198	26	3.4	21	20	85	26	198	26	3.4	355	26	2.8	7.086	-H100	071-42	
193	26	4.0	20	20	83	26	193	26	4.0	346	27	3.3	7.269	-H140	071-42	
179	28	1.1	19	22	77	28	179	28	1.1	321	29	0.9	7.840	-H45	071-42	
176	29	3.8	18	22	75	29	176	29	3.8	314	29	3.2	8.000	-H140	071-42	
171	30	3.1	18	23	73	30	171	30	3.1	306	30	2.6	8.214	-H100	071-42	
157	32	1.0	16	25	67	32	157	32	1.0	282	33	0.8	8.935	-H45	071-42	
156	33	3.6	16	25	67	33	156	33	3.6	279	33	3.0	9.029	-H140	071-42	
155	33	2.9	16	25	66	33	155	33	2.9	277	33	2.4	9.068	-H100	071-42	
143	36	4.5	15	27	61	36	143	36	4.5	257	36	3.7	9.799	-H210	071-42	
143	36	3.4	15	27	61	36	143	36	3.4	257	36	2.8	9.800	-H140	071-42	
140	36	1.0	15	28	60	36	140	36	1.0				10.033	-H45	071-42	
140	36	2.7	14	28	60	36	140	36	2.7	250	37	2.3	10.063	-H100	071-42	
132	39	4.5	14	30	56	39	132	39	4.5	236	39	3.7	10.677	-H320	071-42	
131	39	4.5	14	30	56	39	131	39	4.5	235	39	3.8	10.720	-H210	071-42	

Selection tables, 4-pole motors

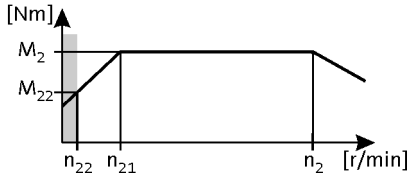

50 Hz: P_N = 0.55 kW
87 Hz: P_N = 1.0 kW

2-stage gearboxes

Mains operation 400 V, 50 Hz			Inverter operation 5 Hz -		- 20 Hz		- 50 Hz (1:10)			- 87 Hz (1:17.4)			i	Product		
n_2 [r/min]	M_2 [Nm]	c	n_{22} [r/min]	M_{22} [Nm]	n_{21} [r/min]	M_2 [Nm]	n_2 [r/min]	M_2 [Nm]	c	n_2 [r/min]	M_2 [Nm]	c		g500	MD□MA□□	
124	41	2.4	13	32	53	41	124	41	2.4	221	42	2.0	11.360	-H100	071-42	
123	41	0.8	13	32	53	41	123	41	0.8				11.429	-H45	071-42	
122	42	3.1	13	32	52	42	122	42	3.1	218	43	2.5	11.554	-H140	071-42	
120	42	4.5	12	33	51	42	120	42	4.5	215	43	3.8	11.680	-H320	071-42	
117	44	4.3	12	34	50	44	117	44	4.3	210	44	3.5	12.000	-H210	071-42	
116	44	4.5	12	34	50	44	116	44	4.5	207	45	3.7	12.128	-H320	071-42	
111	46	2.9	12	35	48	46	111	46	2.9	199	47	2.4	12.640	-H140	071-42	
111	46	2.2	12	35	47	46	111	46	2.2	199	47	1.8	12.653	-H100	071-42	
110	47	0.8	11	36	47	47	110	47	0.8				12.833	-H45	071-42	
106	48	4.5	11	37	45	48	106	48	4.5	190	49	3.8	13.268	-H320	071-42	
103	50	4.1	11	38	44	50	103	50	4.1	184	50	3.4	13.673	-H210	071-42	
101	50	4.5	10	39	43	50	101	50	4.5	181	51	3.7	13.905	-H450	071-42	
101	51	2.7	10	39	43	51	101	51	2.7	180	51	2.2	13.957	-H140	071-42	
97	53	1.9	10	41	41	53	97	53	1.9	174	53	1.6	14.490	-H100	071-42	
94	54	4.2	9.7	42	40	54	94	54	4.2	169	55	3.5	14.898	-H320	071-42	
92	56	3.6	9.5	43	39	56	92	56	3.6	164	56	3.0	15.306	-H210	071-42	
91	56	1.8	9.4	43	39	56	91	56	1.8	162	57	1.5	15.500	-H100	071-42	
89	57	4.5	9.2	44	38	57	89	57	4.5	160	58	3.7	15.714	-H450	071-42	
89	57	4.5	9.2	44	38	57	89	57	4.5	159	58	3.7	15.810	-H600	071-42	
87	58	2.4	9.0	45	37	58	87	58	2.4	156	59	2.0	16.122	-H140	071-42	
84	61	3.5	8.7	47	36	61	84	61	3.5	150	62	2.9	16.750	-H210	071-42	
83	61	4.2	8.6	47	36	61	83	61	4.2	149	62	3.5	16.923	-H320	071-42	
79	64	1.6	8.2	50	34	64	79	64	1.6	142	65	1.3	17.750	-H100	071-42	
79	64	4.5	8.2	50	34	64	79	64	4.5	142	65	3.7	17.755	-H600	071-42	
79	65	2.2	8.1	50	34	65	79	65	2.2	141	66	1.8	17.802	-H140	071-42	
77	66	3.7	7.9	51	33	66	77	66	3.7	138	67	3.1	18.250	-H320	071-42	
75	68	3.1	7.7	52	32	68	75	68	3.1	134	69	2.6	18.750	-H210	071-42	
72	71	1.4	7.4	54	31	71	72	71	1.4	129	72	1.2	19.486	-H100	071-42	
71	72	2.0	7.3	55	30	72	71	72	2.0	127	73	1.6	19.750	-H140	071-42	
68	75	3.7	7.0	58	29	75	68	75	3.7	121	76	3.1	20.731	-H320	071-42	
64	79	2.7	6.7	61	28	79	64	79	2.7	115	80	2.2	21.802	-H210	071-42	
64	79	1.8	6.6	61	28	79	64	79	1.8	115	80	1.5	21.808	-H140	071-42	
63	80	3.7	6.5	62	27	80	63	80	3.7	113	82	3.1	22.170	-H450	071-42	
63	81	1.2	6.5	62	27	81	63	81	1.2	113	82	1.0	22.314	-H100	071-42	
59	86	3.4	6.1	66	25	86	59	86	3.4	106	88	2.8	23.754	-H320	071-42	

Selection tables, 4-pole motors

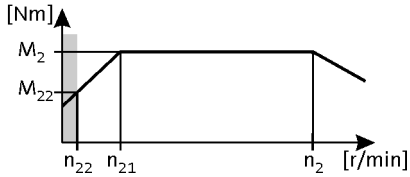

50 Hz: P_N = 0.55 kW
87 Hz: P_N = 1.0 kW

2-stage gearboxes

Mains operation 400 V, 50 Hz			Inverter operation 5 Hz -		- 20 Hz		- 50 Hz (1:10)			- 87 Hz (1:17.4)			i	Product		
n_2 [r/min]	M_2 [Nm]	c	n_{22} [r/min]	M_{22} [Nm]	n_{21} [r/min]	M_2 [Nm]	n_2 [r/min]	M_2 [Nm]	c	n_2 [r/min]	M_2 [Nm]	c		g500	MD□MA□□	
58	89	2.4	5.9	68	25	89	58	89	2.4	103	90	2.0	24.405	-H210	071-42	
57	90	1.6	5.8	69	24	90	57	90	1.6	101	91	1.3	24.829	-H140	071-42	
56	91	3.7	5.8	70	24	91	56	91	3.7	100	92	3.1	25.056	-H450	071-42	
56	91	1.1	5.8	70	24	91	56	91	1.1	100	92	0.9	25.095	-H100	071-42	
56	91	3.7	5.8	70	24	91	56	91	3.7	100	93	3.1	25.207	-H600	071-42	
52	98	3.3	5.4	75	22	98	52	98	3.3	93	99	3.1	26.983	-H320	071-42	
52	98	2.1	5.3	76	22	100	52	98	2.1	93	100	2.0	27.119	-H210	071-42	
51	99	1.4	5.3	77	22	101	51	99	1.4	92	101	1.3	27.415	-H140	071-42	
51	100	3.2	5.3	77	22	100	51	100	3.2	91	102	3.0	27.578	-H450	071-42	
50	103	3.7	5.1	79	21	103	50	103	3.7	89	104	3.5	28.310	-H600	071-42	
49	104	1.0	5.0	80	21	104	49	104	1.0	88	106	0.9	28.738	-H100	071-42	
48	107	2.9	4.9	83	20	107	48	107	2.9	85	109	2.7	29.548	-H320	071-42	
46	110	1.9	4.8	85	20	110	46	110	1.9	83	112	1.8	30.357	-H210	071-42	
45	113	3.2	4.7	87	19	113	45	113	3.2	81	115	3.0	31.167	-H450	071-42	
45	114	3.2	4.6	88	19	114	45	114	3.2	80	116	3.0	31.356	-H600	071-42	
44	116	1.2	4.5	89	19	116	44	116	1.2	79	118	1.1	31.976	-H140	071-42	
42	122	2.6	4.3	94	18	122	42	122	2.6	75	124	2.5	33.564	-H320	071-42	
40	127	1.7	4.1	98	17	127	40	127	1.7	72	129	1.6	35.095	-H210	071-42	
40	128	3.2	4.1	98	17	128	40	128	3.2	71	130	3.0	35.214	-H600	071-42	
40	128	1.1	4.1	99	17	128	40	128	1.1	71	130	1.0	35.308	-H140	071-42	
39	129	2.9	4.1	100	17	129	39	129	2.9	71	131	2.7	35.689	-H450	071-42	
38	135	3.2	3.9	104	16	135	38	135	3.2	68	137	3.0	37.190	-H850	071-42	
37	139	1.8	3.8	107	16	139	37	139	1.8	66	141	1.7	38.238	-H320	071-42	
36	142	1.5	3.7	110	15	142	36	142	1.5	64	145	1.4	39.286	-H210	071-42	
35	146	2.9	3.6	113	15	146	35	146	2.9	62	149	2.8	40.333	-H450	071-42	
35	147	2.9	3.6	113	15	147	35	147	2.9	62	149	2.8	40.578	-H600	071-42	
34	151	3.2	3.5	116	14	151	34	151	3.2	61	153	3.1	41.556	-H850	071-42	
33	154	1.2	3.4	119	14	154	33	154	1.2	59	157	1.2	42.593	-H210	071-42	
32	157	2.1	3.3	121	14	157	32	157	2.1	58	160	2.0	43.313	-H450	071-42	
32	158	1.8	3.3	121	14	158	32	158	1.8	58	160	1.8	43.436	-H320	071-42	
31	164	2.8	3.2	126	13	164	31	164	2.8	56	166	2.7	45.136	-H850	071-42	
31	165	2.9	3.2	127	13	165	31	165	2.9	55	168	2.8	45.571	-H600	071-42	
30	168	1.3	3.1	130	13	168	30	168	1.3	54	171	1.3	46.407	-H320	071-42	
30	173	1.2	3.0	133	13	173	30	173	1.2	53	176	1.2	47.679	-H210	071-42	
29	178	2.1	3.0	137	12	178	29	178	2.1	51	180	2.0	48.950	-H450	071-42	

Selection tables, 4-pole motors

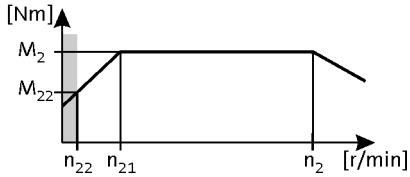

50 Hz: P_N = 0.55 kW
87 Hz: P_N = 1.0 kW

2-stage gearboxes

Mains operation 400 V, 50 Hz			Inverter operation 5 Hz -		- 20 Hz		- 50 Hz (1:10)			- 87 Hz (1:17.4)			i	Product		
n_2 [r/min]	M_2 [Nm]	c	n_{22} [r/min]	M_{22} [Nm]	n_{21} [r/min]	M_2 [Nm]	n_2 [r/min]	M_2 [Nm]	c	n_2 [r/min]	M_2 [Nm]	c		g500	MD□MA□□	
29	179	2.4	2.9	138	12	179	29	179	2.4	51	181	2.4	49.247	-H600	071-42	
28	183	2.8	2.9	141	12	183	28	183	2.8	50	186	2.7	50.433	-H850	071-42	
27	191	1.3	2.8	147	11	191	27	191	1.3	48	194	1.3	52.715	-H320	071-42	
26	199	1.4	2.6	153	11	199	26	199	1.4	46	202	1.3	54.750	-H450	071-42	
25	201	2.4	2.6	155	11	201	25	201	2.4	46	204	2.4	55.307	-H600	071-42	
23	224	1.4	2.3	173	9.7	224	23	224	1.4	41	228	1.3	61.875	-H450	071-42	
23	226	1.4	2.3	174	9.6	226	23	226	1.4	40	229	1.3	62.250	-H600	071-42	
20	254	1.4	2.1	195	8.6	254	20	254	1.4	36	258	1.3	69.911	-H600	071-42	

3-stage gearboxes

Mains operation 400 V, 50 Hz			Inverter operation 5 Hz -		- 20 Hz		- 50 Hz (1:10)			- 87 Hz (1:17.4)			i	Product		
n_2 [r/min]	M_2 [Nm]	c	n_{22} [r/min]	M_{22} [Nm]	n_{21} [r/min]	M_2 [Nm]	n_2 [r/min]	M_2 [Nm]	c	n_2 [r/min]	M_2 [Nm]	c		g500	MD□MA□□	
35	143	4.2	3.6	110	15	143	35	143	4.2	63	145	3.5	39.925	-H600	071-42	
32	155	1.4	3.3	119	14	155	32	155	1.4	58	157	1.1	43.390	-H210	071-42	
32	156	3.9	3.3	120	14	156	32	156	3.9	58	158	3.2	43.676	-H600	071-42	
32	158	2.9	3.3	121	14	158	32	158	2.9	57	160	2.4	44.124	-H450	071-42	
30	169	1.9	3.1	130	13	169	30	169	1.9	53	172	1.8	47.276	-H320	071-42	
29	174	1.2	3.0	134	12	174	29	174	1.2	52	176	1.1	48.571	-H210	071-42	
29	175	3.4	3.0	135	12	175	29	175	3.4	51	178	3.2	49.051	-H600	071-42	
28	178	2.5	2.9	137	12	178	28	178	2.5	50	181	2.4	49.867	-H450	071-42	
27	188	4.5	2.7	145	11	188	27	188	4.5	48	191	4.2	52.743	-H850	071-42	
26	192	1.7	2.7	148	11	192	26	192	1.7	47	195	1.6	53.703	-H320	071-42	
25	198	1.1	2.6	153	11	198	25	198	1.1	45	201	1.0	55.529	-H210	071-42	
25	199	3.0	2.6	153	11	199	25	199	3.0	45	202	2.8	55.710	-H600	071-42	
25	202	2.2	2.6	155	11	202	25	202	2.2	45	205	2.1	56.469	-H450	071-42	
24	211	4.0	2.5	162	10	211	24	211	4.0	43	214	3.8	58.933	-H850	071-42	
23	216	1.5	2.4	166	9.9	216	23	216	1.5	42	220	1.4	60.502	-H320	071-42	
23	221	2.0	2.3	170	9.7	221	23	221	2.0	41	224	1.9	61.774	-H450	071-42	
23	222	1.0	2.3	171	9.7	222	23	222	1.0	41	226	0.9	62.160	-H210	071-42	
23	224	2.7	2.3	172	9.6	224	23	224	2.7	40	227	2.5	62.566	-H600	071-42	
21	244	2.5	2.1	188	8.8	244	21	244	2.5	37	248	2.3	68.244	-H600	071-42	
20	246	1.3	2.1	189	8.7	246	20	246	1.3	37	249	1.2	68.726	-H320	071-42	
20	249	1.8	2.1	192	8.6	249	20	249	1.8	36	253	1.7	69.813	-H450	071-42	
20	254	0.8	2.0	195	8.4	254	20	254	0.8				71.026	-H210	071-42	
18	274	2.2	1.9	211	7.8	274	18	274	2.2	33	278	2.1	76.643	-H600	071-42	
18	276	1.2	1.9	213	7.8	276	18	276	1.2	33	281	1.1	77.387	-H320	071-42	
18	281	1.6	1.8	217	7.6	281	18	281	1.6	32	286	1.5	78.794	-H450	071-42	
17	300	2.8	1.7	231	7.1	300	17	300	2.8	30	305	2.8	84.096	-H850	071-42	
16	314	1.0	1.6	242	6.8	314	16	314	1.0	29	319	1.0	87.906	-H320	071-42	

Selection tables, 4-pole motors

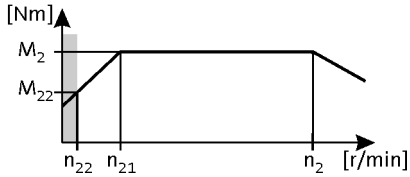

50 Hz: P_N = 0.55 kW
87 Hz: P_N = 1.0 kW

3-stage gearboxes

Mains operation 400 V, 50 Hz			Inverter operation 5 Hz -		- 20 Hz		- 50 Hz (1:10)			- 87 Hz (1:17.4)			i	Product		
n_2 [r/min]	M_2 [Nm]	c	n_{22} [r/min]	M_{22} [Nm]	n_{21} [r/min]	M_2 [Nm]	n_2 [r/min]	M_2 [Nm]	c	n_2 [r/min]	M_2 [Nm]	c		g500	MD□MA□□	
16	317	1.9	1.6	244	6.8	317	16	317	1.9	28	322	1.9	88.826	-H600	071-42	
16	318	1.4	1.6	245	6.7	318	16	318	1.4	28	323	1.4	89.048	-H450	071-42	
15	336	2.5	1.5	259	6.4	336	15	336	2.5	27	341	2.5	93.966	-H850	071-42	
15	345	1.3	1.5	266	6.2	345	15	345	1.3	26	350	1.3	96.522	-H450	071-42	
14	356	1.7	1.5	274	6.0	356	14	356	1.7	25	362	1.7	99.757	-H600	071-42	
14	359	0.9	1.4	276	6.0	359	14	359	0.9	25	365	0.9	100.462	-H320	071-42	
13	374	2.3	1.4	288	5.7	374	13	374	2.3	24	380	2.2	104.607	-H850	071-42	
13	390	1.2	1.3	300	5.5	390	13	390	1.2	23	396	1.1	109.083	-H450	071-42	
13	395	1.5	1.3	304	5.4	395	13	395	1.5	23	401	1.5	110.491	-H600	071-42	
12	418	2.0	1.2	322	5.1	418	12	418	2.0	22	424	2.0	116.884	-H850	071-42	
12	433	1.0	1.2	334	4.9	433	12	433	1.0	21	440	1.0	121.342	-H450	071-42	
11	443	1.4	1.2	341	4.8	443	11	443	1.4	20	450	1.3	124.088	-H600	071-42	
10	484	1.8	1.1	372	4.4	484	10	484	1.8	19	491	1.7	135.373	-H850	071-42	
10	490	0.9	1.1	377	4.4	490	10	490	0.9	18	498	0.9	137.133	-H450	071-42	
9.8	511	1.2	1.0	393	4.2	511	9.8	511	1.2	18	519	1.2	142.988	-H600	071-42	
9.3	540	1.6	1.0	416	4.0	540	9.3	540	1.6	17	549	1.6	151.262	-H850	071-42	
9.0	558	0.8	0.9	430	3.8	558	9.0	558	0.8				156.274	-H450	071-42	
8.7	574	1.1	0.9	442	3.7	574	8.7	574	1.1	16	583	1.0	160.585	-H600	071-42	
8.6	587	1.5	0.9	452	3.7	587	8.6	587	1.5	15	596	1.4	164.294	-H850	071-42	
8.1	620	1.0	0.8	477	3.5	620	8.1	620	1.0	15	630	1.0	173.536	-H600	071-42	
7.7	653	2.3	0.8	503	3.3	653	7.7	653	2.3	14	663	2.3	182.844	-H1500	071-42	
7.7	656	1.3	0.8	505	3.3	656	7.7	656	1.3	14	666	1.3	183.577	-H850	071-42	
7.2	696	0.9	0.7	536	3.1	696	7.2	696	0.9	13	707	0.9	194.892	-H600	071-42	
6.9	722	2.1	0.7	556	3.0	722	6.9	722	2.1	12	734	2.0	202.237	-H1500	071-42	
6.8	742	1.2	0.7	571	2.9	742	6.8	742	1.2	12	754	1.1	207.675	-H850	071-42	
6.3	793	1.9	0.7	610	2.7	793	6.3	793	1.9	11	805	1.9	221.907	-H1500	071-42	
6.1	829	1.0	0.6	638	2.6	829	6.1	829	1.0	11	842	1.0	232.050	-H850	071-42	
5.7	877	1.7	0.6	675	2.4	877	5.7	877	1.7	10	891	1.7	245.442	-H1500	071-42	
5.0	1002	1.5	0.5	772	2.1	1002	5.0	1002	1.5	9.0	1018	1.5	280.500	-H1500	071-42	
4.5	1108	1.4	0.5	853	1.9	1108	4.5	1108	1.4	8.1	1126	1.3	310.250	-H1500	071-42	

Selection tables, 4-pole motors

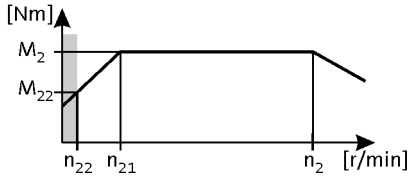

50 Hz: P_N = 0.75 kW
87 Hz: P_N = 1.35 kW

2-stage gearboxes

Mains operation 400 V, 50 Hz			Inverter operation 5 Hz -		- 20 Hz		- 50 Hz (1:10)			- 87 Hz (1:17.4)			i	Product		
n_2 [r/min]	M_2 [Nm]	c	n_{22} [r/min]	M_{22} [Nm]	n_{21} [r/min]	M_2 [Nm]	n_2 [r/min]	M_2 [Nm]	c	n_2 [r/min]	M_2 [Nm]	c		g500	m5□□	
444	16	4.3	44	12	184	16	444	16	4.3	784	16	3.5	3.267	-H140	50-P80/M4	
432	16	3.9	43	12	179	16	432	16	3.9	763	16	3.2	3.354	-H100	50-P80/M4	
428	16	4.9	43	13	177	16	428	16	4.9	755	17	4.0	3.389	-H210	50-P80/M4	
428	16	4.9	43	13	177	16	428	16	4.9	755	17	4.0	3.389	-H320	50-P80/M4	
324	21	4.3	32	17	134	21	324	21	4.3	571	22	3.5	4.480	-H140	50-P80/M4	
315	22	3.3	32	17	130	22	315	22	3.3	557	22	2.7	4.600	-H100	50-P80/M4	
281	25	3.0	28	19	116	25	281	25	3.0	496	25	2.5	5.167	-H100	50-P80/M4	
260	27	4.9	26	21	108	27	260	27	4.9	459	27	4.0	5.583	-H210	50-P80/M4	
253	27	3.8	25	21	105	27	253	27	3.8	447	28	3.1	5.733	-H140	50-P80/M4	
246	28	2.9	25	22	102	28	246	28	2.9	435	29	2.4	5.887	-H100	50-P80/M4	
238	29	4.9	24	22	99	29	238	29	4.9	421	30	4.0	6.083	-H320	50-P80/M4	
232	30	4.9	23	23	96	30	232	30	4.9	410	31	4.0	6.250	-H210	50-P80/M4	
231	30	3.5	23	23	96	30	231	30	3.5	408	31	2.9	6.272	-H140	50-P80/M4	
225	31	2.7	23	24	93	31	225	31	2.7	398	31	2.2	6.440	-H100	50-P80/M4	
210	33	4.9	21	26	87	33	210	33	4.9	371	34	4.0	6.910	-H320	50-P80/M4	
205	34	2.5	21	26	85	34	205	34	2.5	361	35	2.1	7.086	-H100	50-P80/M4	
200	35	3.0	20	27	83	35	200	35	3.0	352	36	2.5	7.269	-H140	50-P80/M4	
181	38	3.1	18	30	75	38	181	38	3.1	320	39	2.5	8.000	-H140	50-P80/M4	
177	39	2.3	18	30	73	39	177	39	2.3	312	40	1.9	8.214	-H100	50-P80/M4	
161	43	2.7	16	33	67	43	161	43	2.7	284	44	2.2	9.029	-H140	50-P80/M4	
160	43	2.2	16	33	66	43	160	43	2.2	282	44	1.8	9.068	-H100	50-P80/M4	
148	47	3.9	15	36	61	47	148	47	3.9	261	48	3.2	9.799	-H210	50-P80/M4	
148	47	2.7	15	36	61	47	148	47	2.7	261	48	2.2	9.800	-H140	50-P80/M4	
144	48	2.1	14	37	60	48	144	48	2.1	254	49	1.7	10.063	-H100	50-P80/M4	
136	51	4.3	14	39	56	51	136	51	4.3	240	52	3.5	10.677	-H320	50-P80/M4	
135	51	3.7	14	40	56	51	135	51	3.7	239	52	3.0	10.720	-H210	50-P80/M4	
128	54	1.8	13	42	53	54	128	54	1.8	225	56	1.5	11.360	-H100	50-P80/M4	
126	55	2.3	13	43	52	55	126	55	2.3	222	56	1.9	11.554	-H140	50-P80/M4	
124	56	4.3	12	43	51	56	124	56	4.3	219	57	3.5	11.680	-H320	50-P80/M4	
121	58	3.2	12	44	50	58	121	58	3.2	213	59	2.7	12.000	-H210	50-P80/M4	
120	58	4.3	12	45	50	58	120	58	4.3	211	59	3.5	12.128	-H320	50-P80/M4	
115	61	2.2	12	47	48	61	115	61	2.2	203	62	1.8	12.640	-H140	50-P80/M4	
115	61	1.7	12	47	47	61	115	61	1.7	202	62	1.4	12.653	-H100	50-P80/M4	
109	64	4.1	11	49	45	64	109	64	4.1	193	65	3.4	13.268	-H320	50-P80/M4	
106	66	3.1	11	50	44	66	106	66	3.1	187	67	2.5	13.673	-H210	50-P80/M4	

Selection tables, 4-pole motors

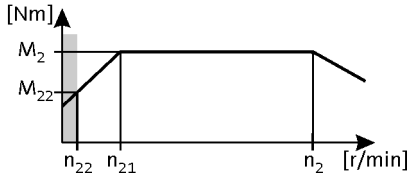

50 Hz: P_N = 0.75 kW
87 Hz: P_N = 1.35 kW

2-stage gearboxes

Mains operation 400 V, 50 Hz			Inverter operation 5 Hz -		- 20 Hz		- 50 Hz (1:10)			- 87 Hz (1:17.4)			i	Product		
n_2 [r/min]	M_2 [Nm]	c	n_{22} [r/min]	M_{22} [Nm]	n_{21} [r/min]	M_2 [Nm]	n_2 [r/min]	M_2 [Nm]	c	n_2 [r/min]	M_2 [Nm]	c		g500	m5□□	
104	67	4.3	10	51	43	67	104	67	4.3	184	68	3.5	13.905	-H450	50-P80/M4	
104	67	2.0	10	52	43	67	104	67	2.0	183	68	1.7	13.957	-H140	50-P80/M4	
100	69	1.4	10	53	41	69	100	69	1.4	177	71	1.2	14.490	-H100	50-P80/M4	
97	71	4.0	9.7	55	40	71	97	71	4.0	172	73	3.3	14.898	-H320	50-P80/M4	
95	73	2.7	9.5	56	39	73	95	73	2.7	167	75	2.2	15.306	-H210	50-P80/M4	
94	74	1.4	9.4	57	39	74	94	74	1.4	165	76	1.1	15.500	-H100	50-P80/M4	
92	75	4.3	9.2	58	38	75	92	75	4.3	163	77	3.5	15.714	-H450	50-P80/M4	
92	76	4.3	9.2	58	38	76	92	76	4.3	162	77	3.5	15.810	-H600	50-P80/M4	
90	77	1.8	9.0	59	37	77	90	77	1.8	159	79	1.5	16.122	-H140	50-P80/M4	
87	80	2.6	8.7	62	36	80	87	80	2.6	153	82	2.2	16.750	-H210	50-P80/M4	
86	81	3.5	8.6	62	36	81	86	81	3.5	151	83	2.9	16.923	-H320	50-P80/M4	
82	85	1.2	8.2	65	34	85	82	85	1.2	144	87	1.0	17.750	-H100	50-P80/M4	
82	85	4.3	8.2	66	34	85	82	85	4.3	144	87	3.5	17.755	-H600	50-P80/M4	
82	85	1.6	8.1	66	34	85	82	85	1.6	144	87	1.4	17.802	-H140	50-P80/M4	
80	87	3.5	7.9	67	33	87	80	87	3.5	140	89	2.9	18.250	-H320	50-P80/M4	
77	90	2.3	7.7	69	32	90	77	90	2.3	137	92	1.9	18.750	-H210	50-P80/M4	
74	93	1.1	7.4	72	31	93	74	93	1.1	131	95	0.9	19.486	-H100	50-P80/M4	
73	95	1.5	7.3	73	30	95	73	95	1.5	130	96	1.2	19.750	-H140	50-P80/M4	
70	99	3.0	7.0	76	29	101	70	99	3.0	124	101	2.5	20.731	-H320	50-P80/M4	
67	104	2.0	6.7	80	28	104	67	104	2.0	117	107	1.7	21.802	-H210	50-P80/M4	
67	105	1.3	6.6	80	28	105	67	105	1.3	117	107	1.1	21.808	-H140	50-P80/M4	
65	106	3.5	6.5	82	27	106	65	106	3.5	116	108	2.9	22.170	-H450	50-P80/M4	
65	107	0.9	6.5	82	27	107	65	107	0.9				22.314	-H100	50-P80/M4	
61	114	2.8	6.1	88	25	114	61	114	2.8	108	116	2.3	23.754	-H320	50-P80/M4	
59	117	1.8	5.9	90	25	117	59	117	1.8	105	119	1.5	24.405	-H210	50-P80/M4	
58	119	1.2	5.8	92	24	119	58	119	1.2	103	121	1.0	24.829	-H140	50-P80/M4	
58	120	3.5	5.8	92	24	120	58	120	3.5	102	122	2.9	25.056	-H450	50-P80/M4	
58	120	0.8	5.8	93	24	120	58	120	0.8				25.095	-H100	50-P80/M4	
58	121	3.5	5.8	93	24	121	58	121	3.5	102	123	2.9	25.207	-H600	50-P80/M4	
54	129	2.5	5.4	100	22	129	54	129	2.5	95	132	2.3	26.983	-H320	50-P80/M4	
54	130	1.6	5.3	100	22	130	54	130	1.6	94	132	1.5	27.119	-H210	50-P80/M4	
53	131	1.1	5.3	101	22	131	53	131	1.1	93	134	1.0	27.415	-H140	50-P80/M4	
53	132	3.0	5.3	102	22	132	53	132	3.0	93	135	2.8	27.578	-H450	50-P80/M4	
51	136	3.5	5.1	104	21	136	51	136	3.5	90	138	3.3	28.310	-H600	50-P80/M4	
49	142	2.3	4.9	109	20	142	49	142	2.3	87	144	2.1	29.548	-H320	50-P80/M4	

Selection tables, 4-pole motors

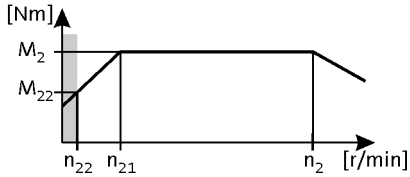

50 Hz: P_N = 0.75 kW
87 Hz: P_N = 1.35 kW

2-stage gearboxes

Mains operation 400 V, 50 Hz			Inverter operation 5 Hz -		- 20 Hz		- 50 Hz (1:10)			- 87 Hz (1:17.4)			i	Product		
n_2 [r/min]	M_2 [Nm]	c	n_{22} [r/min]	M_{22} [Nm]	n_{21} [r/min]	M_2 [Nm]	n_2 [r/min]	M_2 [Nm]	c	n_2 [r/min]	M_2 [Nm]	c		g500	m5□□	
48	145	1.4	4.8	112	20	145	48	145	1.4	84	148	1.4	30.357	-H210	50-P80/M4	
47	149	3.0	4.7	115	19	149	47	149	3.0	82	152	2.8	31.167	-H450	50-P80/M4	
46	150	3.0	4.6	116	19	150	46	150	3.0	82	153	2.8	31.356	-H600	50-P80/M4	
45	153	0.9	4.5	118	19	153	45	153	0.9	80	156	0.9	31.976	-H140	50-P80/M4	
43	161	2.0	4.3	124	18	161	43	161	2.0	76	164	1.9	33.564	-H320	50-P80/M4	
41	168	1.3	4.1	129	17	168	41	168	1.3	73	171	1.2	35.095	-H210	50-P80/M4	
41	169	3.0	4.1	130	17	169	41	169	3.0	73	172	2.8	35.214	-H600	50-P80/M4	
41	169	0.8	4.1	130	17	169	41	169	0.8				35.308	-H140	50-P80/M4	
41	171	2.6	4.1	132	17	171	41	171	2.6	72	174	2.5	35.689	-H450	50-P80/M4	
39	178	3.0	3.9	137	16	178	39	178	3.0	69	182	2.8	37.190	-H850	50-P80/M4	
38	183	1.4	3.8	141	16	183	38	183	1.4	67	187	1.3	38.238	-H320	50-P80/M4	
37	188	1.1	3.7	145	15	188	37	188	1.1	65	192	1.0	39.286	-H210	50-P80/M4	
36	193	2.3	3.6	149	15	193	36	193	2.3	64	197	2.3	40.333	-H450	50-P80/M4	
36	194	2.7	3.6	150	15	194	36	194	2.7	63	198	2.7	40.578	-H600	50-P80/M4	
35	199	3.0	3.5	153	14	199	35	199	3.0	62	203	2.9	41.556	-H850	50-P80/M4	
34	204	0.9	3.4	157	14	204	34	204	0.9	60	208	0.9	42.593	-H210	50-P80/M4	
34	208	1.6	3.3	160	14	208	34	208	1.6	59	212	1.5	43.313	-H450	50-P80/M4	
33	208	1.4	3.3	160	14	208	33	208	1.4	59	212	1.3	43.436	-H320	50-P80/M4	
32	216	2.6	3.2	166	13	216	32	216	2.6	57	221	2.6	45.136	-H850	50-P80/M4	
32	218	2.7	3.2	168	13	218	32	218	2.7	56	223	2.7	45.571	-H600	50-P80/M4	
31	222	1.0	3.1	171	13	222	31	222	1.0	55	227	1.0	46.407	-H320	50-P80/M4	
30	228	0.9	3.0	176	13	228	30	228	0.9	54	233	0.9	47.679	-H210	50-P80/M4	
30	235	1.6	3.0	181	12	235	30	235	1.6	52	239	1.5	48.950	-H450	50-P80/M4	
29	236	1.9	2.9	182	12	236	29	236	1.9	52	241	1.9	49.247	-H600	50-P80/M4	
29	242	2.6	2.9	186	12	242	29	242	2.6	51	246	2.6	50.433	-H850	50-P80/M4	
28	253	1.0	2.8	194	11	253	28	253	1.0	49	258	1.0	52.715	-H320	50-P80/M4	
27	262	1.0	2.6	202	11	262	27	262	1.0	47	267	1.0	54.750	-H450	50-P80/M4	
26	265	1.9	2.6	204	11	265	26	265	1.9	46	270	1.9	55.307	-H600	50-P80/M4	
23	297	1.0	2.3	228	9.7	297	23	297	1.0	41	302	1.0	61.875	-H450	50-P80/M4	
23	298	1.2	2.3	230	9.6	298	23	298	1.2	41	304	1.2	62.250	-H600	50-P80/M4	
21	335	1.3	2.1	258	8.6	335	21	335	1.3	37	342	1.2	69.911	-H600	50-P80/M4	

Selection tables, 4-pole motors

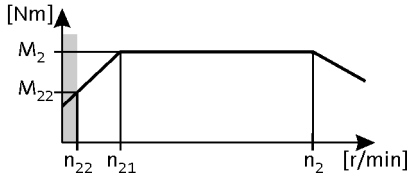

50 Hz: P_N = 0.75 kW
87 Hz: P_N = 1.35 kW

3-stage gearboxes

Mains operation 400 V, 50 Hz			Inverter operation 5 Hz -		- 20 Hz		- 50 Hz (1:10)			- 87 Hz (1:17.4)			i	Product		
n_2 [r/min]	M_2 [Nm]	c	n_{22} [r/min]	M_{22} [Nm]	n_{21} [r/min]	M_2 [Nm]	n_2 [r/min]	M_2 [Nm]	c	n_2 [r/min]	M_2 [Nm]	c		g500	m5□□	
36	188	3.2	3.6	145	15	188	36	188	3.2	64	192	2.6	39.925	-H600	50-P80/M4	
33	205	1.0	3.3	158	14	205	33	205	1.0	59	209	0.8	43.390	-H210	50-P80/M4	
33	206	2.9	3.3	159	14	206	33	206	2.9	59	210	2.4	43.676	-H600	50-P80/M4	
33	208	2.2	3.3	160	14	208	33	208	2.2	58	212	1.8	44.124	-H450	50-P80/M4	
31	223	1.4	3.1	172	13	223	31	223	1.4	54	228	1.3	47.276	-H320	50-P80/M4	
30	229	0.9	3.0	176	12	229	30	229	0.9	53	234	0.9	48.571	-H210	50-P80/M4	
30	232	2.6	3.0	178	12	232	30	232	2.6	52	236	2.4	49.051	-H600	50-P80/M4	
29	235	1.9	2.9	181	12	235	29	235	1.9	51	240	1.8	49.867	-H450	50-P80/M4	
28	249	3.4	2.7	192	11	249	28	249	3.4	49	254	3.2	52.743	-H850	50-P80/M4	
27	253	1.3	2.7	195	11	253	27	253	1.3	48	258	1.2	53.703	-H320	50-P80/M4	
26	263	2.3	2.6	202	11	263	26	263	2.3	46	268	2.1	55.710	-H600	50-P80/M4	
26	267	1.7	2.6	205	11	267	26	267	1.7	45	272	1.6	56.469	-H450	50-P80/M4	
25	278	3.1	2.5	214	10	278	25	278	3.1	43	284	2.9	58.933	-H850	50-P80/M4	
24	286	1.1	2.4	220	9.9	286	24	286	1.1	42	291	1.0	60.502	-H320	50-P80/M4	
24	292	1.5	2.3	224	9.7	292	24	292	1.5	41	297	1.4	61.774	-H450	50-P80/M4	
23	295	2.0	2.3	227	9.6	295	23	295	2.0	41	301	1.9	62.566	-H600	50-P80/M4	
21	322	1.9	2.1	248	8.8	322	21	322	1.9	38	328	1.7	68.244	-H600	50-P80/M4	
21	324	1.0	2.1	250	8.7	324	21	324	1.0	37	331	0.9	68.726	-H320	50-P80/M4	
21	330	1.4	2.1	254	8.6	330	21	330	1.4	37	336	1.3	69.813	-H450	50-P80/M4	
19	362	1.7	1.9	278	7.8	362	19	362	1.7	33	369	1.6	76.643	-H600	50-P80/M4	
19	365	0.9	1.9	281	7.8	365	19	365	0.9	33	372	0.8	77.387	-H320	50-P80/M4	
18	372	1.2	1.8	286	7.6	372	18	372	1.2	33	379	1.1	78.794	-H450	50-P80/M4	
17	397	2.1	1.7	305	7.1	397	17	397	2.1	30	405	2.1	84.096	-H850	50-P80/M4	
16	419	1.4	1.6	323	6.8	419	16	419	1.4	29	427	1.4	88.826	-H600	50-P80/M4	
16	420	1.1	1.6	323	6.7	420	16	420	1.1	29	429	1.1	89.048	-H450	50-P80/M4	
15	444	1.9	1.5	341	6.4	444	15	444	1.9	27	452	1.9	93.966	-H850	50-P80/M4	
15	456	1.0	1.5	351	6.2	456	15	456	1.0	27	465	1.0	96.522	-H450	50-P80/M4	
15	471	1.3	1.5	362	6.0	471	15	471	1.3	26	480	1.3	99.757	-H600	50-P80/M4	
14	494	1.7	1.4	380	5.7	494	14	494	1.7	25	503	1.7	104.607	-H850	50-P80/M4	
13	515	0.9	1.3	396	5.5	515	13	515	0.9	24	525	0.9	109.083	-H450	50-P80/M4	
13	522	1.2	1.3	401	5.4	522	13	522	1.2	23	532	1.1	110.491	-H600	50-P80/M4	
12	552	1.5	1.2	425	5.1	552	12	552	1.5	22	563	1.5	116.884	-H850	50-P80/M4	
12	586	1.0	1.2	451	4.8	586	12	586	1.0	21	597	1.0	124.088	-H600	50-P80/M4	
11	639	1.3	1.1	492	4.4	639	11	639	1.3	19	651	1.3	135.373	-H850	50-P80/M4	
10	675	0.9	1.0	519	4.2	675	10	675	0.9	18	688	0.9	142.988	-H600	50-P80/M4	

Selection tables, 4-pole motors

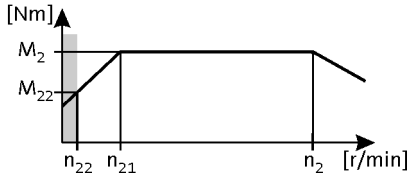

50 Hz: P_N = 0.75 kW
87 Hz: P_N = 1.35 kW

3-stage gearboxes

Mains operation 400 V, 50 Hz			Inverter operation 5 Hz -		- 20 Hz		- 50 Hz (1:10)			- 87 Hz (1:17.4)			i	Product		
n_2 [r/min]	M_2 [Nm]	c	n_{22} [r/min]	M_{22} [Nm]	n_{21} [r/min]	M_2 [Nm]	n_2 [r/min]	M_2 [Nm]	c	n_2 [r/min]	M_2 [Nm]	c		g500	m5□□	
9.6	714	1.2	1.0	549	4.0	714	9.6	714	1.2	17	728	1.2	151.262	-H850	50-P80/M4	
8.8	776	1.1	0.9	597	3.7	776	8.8	776	1.1	16	791	1.1	164.294	-H850	50-P80/M4	
7.9	863	1.7	0.8	664	3.3	863	7.9	863	1.7	14	880	1.7	182.844	-H1500	50-P80/M4	
7.9	867	1.0	0.8	667	3.3	867	7.9	867	1.0	14	883	1.0	183.577	-H850	50-P80/M4	
7.2	955	1.6	0.7	734	3.0	955	7.2	955	1.6	13	973	1.5	202.237	-H1500	50-P80/M4	
7.0	980	0.9	0.7	754	2.9	980	7.0	980	0.9	12	999	0.9	207.675	-H850	50-P80/M4	
6.5	1047	1.4	0.7	806	2.7	1047	6.5	1047	1.4	12	1068	1.4	221.907	-H1500	50-P80/M4	
5.9	1159	1.3	0.6	891	2.4	1159	5.9	1159	1.3	10	1181	1.3	245.442	-H1500	50-P80/M4	
5.2	1324	1.1	0.5	1019	2.1	1324	5.2	1324	1.1	9.1	1350	1.1	280.500	-H1500	50-P80/M4	
4.7	1464	1.0	0.5	1127	1.9	1464	4.7	1464	1.0	8.3	1493	1.0	310.250	-H1500	50-P80/M4	

Selection tables, 4-pole motors

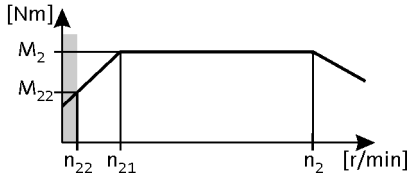

50 Hz: P_N = 1.1 kW
87 Hz: P_N = 1.9 kW

2-stage gearboxes

Mains operation 400 V, 50 Hz			Inverter operation 5 Hz -		- 20 ... 25 Hz		- 50 Hz (1:10)			- 87 Hz (1:17.4)			i	Product		
n_2 [r/min]	M_2 [Nm]	c	n_{22} [r/min]	M_{22} [Nm]	n_{21} [r/min]	M_2 [Nm]	n_2 [r/min]	M_2 [Nm]	c	n_2 [r/min]	M_2 [Nm]	c		g500	m5□□	
442	23	3.6	44	16	184	23	442	23	3.6	781	23	3.1	3.267	-H140	50-P90/M4	
431	24	2.6	43	17	179	23	431	24	2.6	760	23	2.2	3.354	-H100	50-P90/M4	
426	24	5.3	43	17	177	23	426	24	5.3	753	23	4.5	3.389	-H210	50-P90/M4	
426	24	5.9	43	17	177	23	426	24	5.9	753	23	5.0	3.389	-H320	50-P90/M4	
322	32	3.0	32	22	134	31	322	32	3.0	569	31	2.6	4.480	-H140	50-P90/M4	
314	32	2.2	32	23	130	32	314	32	2.2	554	32	1.9	4.600	-H100	50-P90/M4	
311	33	4.4	31	23	129	32	311	33	4.4	549	32	3.7	4.648	-H210	50-P90/M4	
311	33	5.8	31	23	129	32	311	33	5.8	549	32	4.9	4.648	-H320	50-P90/M4	
280	36	2.1	28	26	116	36	280	36	2.1	494	36	1.8	5.167	-H100	50-P90/M4	
259	39	4.0	26	28	108	39	259	39	4.0	457	39	3.5	5.583	-H210	50-P90/M4	
252	40	5.8	25	28	105	40	252	40	5.8	445	40	5.0	5.733	-H600	50-P90/M4	
252	40	2.6	25	28	105	40	252	40	2.6	445	40	2.2	5.733	-H140	50-P90/M4	
245	42	2.0	25	29	102	41	245	42	2.0	433	41	1.7	5.887	-H100	50-P90/M4	
239	43	5.8	24	30	99	42	239	43	5.8	422	42	5.0	6.045	-H450	50-P90/M4	
237	43	5.3	24	30	99	42	237	43	5.3	419	42	4.5	6.083	-H320	50-P90/M4	
231	44	3.6	23	31	96	43	231	44	3.6	408	43	3.1	6.250	-H210	50-P90/M4	
230	44	2.4	23	31	96	43	230	44	2.4	407	43	2.0	6.272	-H140	50-P90/M4	
224	45	1.8	23	32	93	44	224	45	1.8	396	44	1.6	6.440	-H100	50-P90/M4	
218	47	5.9	22	33	91	46	218	47	5.9	386	46	5.0	6.613	-H450	50-P90/M4	
209	49	4.5	21	34	87	48	209	49	4.5	369	48	3.8	6.910	-H320	50-P90/M4	
204	50	1.7	21	35	85	49	204	50	1.7	360	49	1.5	7.086	-H100	50-P90/M4	
199	51	2.1	20	36	83	50	199	51	2.1	351	50	1.8	7.269	-H140	50-P90/M4	
189	54	3.2	19	38	78	53	189	54	3.2	333	53	2.7	7.657	-H210	50-P90/M4	
181	56	2.1	18	40	75	55	181	56	2.1	319	55	1.8	8.000	-H140	50-P90/M4	
176	58	1.6	18	41	73	57	176	58	1.6	310	57	1.4	8.214	-H100	50-P90/M4	
173	59	4.2	17	41	72	58	173	59	4.2	306	58	3.6	8.343	-H320	50-P90/M4	
169	60	2.8	17	42	70	59	169	60	2.8	298	59	2.4	8.571	-H210	50-P90/M4	
160	64	1.8	16	45	67	62	160	64	1.8	282	62	1.6	9.029	-H140	50-P90/M4	
159	64	1.5	16	45	66	63	159	64	1.5	281	63	1.3	9.068	-H100	50-P90/M4	
152	67	3.6	15	47	63	65	152	67	3.6	269	65	3.1	9.477	-H320	50-P90/M4	
147	69	2.6	15	49	61	68	147	69	2.6	260	68	2.3	9.799	-H210	50-P90/M4	
147	69	1.8	15	49	61	68	147	69	1.8	260	68	1.6	9.800	-H140	50-P90/M4	
145	70	5.5	15	49	60	69	145	70	5.5	256	69	4.7	9.965	-H450	50-P90/M4	
144	71	1.4	14	50	60	69	144	71	1.4	253	69	1.2	10.063	-H100	50-P90/M4	
135	75	3.5	14	53	56	74	135	75	3.5	239	74	3.0	10.677	-H320	50-P90/M4	

Selection tables, 4-pole motors

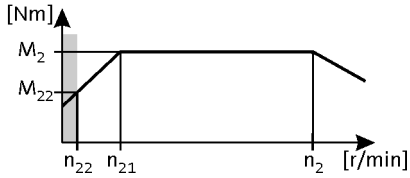

50 Hz: P_N = 1.1 kW
87 Hz: P_N = 1.9 kW

2-stage gearboxes

Mains operation 400 V, 50 Hz			Inverter operation 5 Hz -		- 20 ... 25 Hz		- 50 Hz (1:10)			- 87 Hz (1:17.4)			i	Product		
n_2 [r/min]	M_2 [Nm]	c	n_{22} [r/min]	M_{22} [Nm]	n_{21} [r/min]	M_2 [Nm]	n_2 [r/min]	M_2 [Nm]	c	n_2 [r/min]	M_2 [Nm]	c		g500	m5□□	
135	76	2.5	14	53	56	74	135	76	2.5	238	74	2.1	10.720	-H210	50-P90/M4	
128	79	5.0	13	56	53	78	128	79	5.0	226	78	4.3	11.262	-H450	50-P90/M4	
127	80	5.8	13	56	53	78	127	80	5.8	225	78	5.0	11.330	-H600	50-P90/M4	
127	80	1.3	13	56	53	78	127	80	1.3	225	78	1.1	11.360	-H100	50-P90/M4	
125	82	1.6	13	57	52	80	125	82	1.6	221	80	1.3	11.554	-H140	50-P90/M4	
124	82	3.3	12	58	51	81	124	82	3.3	218	81	2.8	11.680	-H320	50-P90/M4	
120	85	2.2	12	59	50	83	120	85	2.2	213	83	1.9	12.000	-H210	50-P90/M4	
119	86	3.0	12	60	50	84	119	86	3.0	210	84	2.5	12.128	-H320	50-P90/M4	
117	87	4.7	12	61	49	85	117	87	4.7	207	85	4.1	12.320	-H450	50-P90/M4	
117	87	5.9	12	61	48	86	117	87	5.9	206	86	5.0	12.395	-H600	50-P90/M4	
114	89	1.5	12	63	48	87	114	89	1.5	202	87	1.3	12.640	-H140	50-P90/M4	
114	89	1.1	12	63	47	87	114	89	1.1	202	87	1.0	12.653	-H100	50-P90/M4	
109	94	2.8	11	66	45	92	109	94	2.8	192	92	2.4	13.268	-H320	50-P90/M4	
106	97	2.1	11	68	44	94	106	97	2.1	187	94	1.8	13.673	-H210	50-P90/M4	
104	98	4.3	10	69	43	96	104	98	4.3	183	96	3.7	13.905	-H450	50-P90/M4	
104	98	5.9	10	69	43	96	104	98	5.9	183	96	5.0	13.920	-H600	50-P90/M4	
104	99	1.4	10	69	43	96	104	99	1.4	183	96	1.2	13.957	-H140	50-P90/M4	
100	102	5.8	10	72	41	100	100	102	5.8	176	100	5.0	14.490	-H850	50-P90/M4	
100	102	1.0	10	72	41	100	100	102	1.0	176	100	0.8	14.490	-H100	50-P90/M4	
97	105	2.8	9.7	74	40	103	97	105	2.8	171	103	2.4	14.898	-H320	50-P90/M4	
94	108	1.9	9.5	76	39	106	94	108	1.9	167	106	1.6	15.306	-H210	50-P90/M4	
93	109	0.9	9.4	77	39	109	93	109	0.9				15.500	-H100	50-P90/M4	
92	111	4.0	9.2	78	38	108	92	111	4.0	162	108	3.4	15.714	-H450	50-P90/M4	
91	112	5.4	9.2	78	38	109	91	112	5.4	161	109	4.6	15.810	-H600	50-P90/M4	
90	114	1.2	9.0	80	37	111	90	114	1.2	158	111	1.1	16.122	-H140	50-P90/M4	
89	114	5.8	9.0	80	37	112	89	114	5.8	158	112	5.0	16.190	-H850	50-P90/M4	
86	118	1.8	8.7	83	36	116	86	118	1.8	152	116	1.5	16.750	-H210	50-P90/M4	
85	119	2.4	8.6	84	36	117	85	119	2.4	151	117	2.0	16.923	-H320	50-P90/M4	
85	120	3.7	8.5	84	35	118	85	120	3.7	150	118	3.2	17.033	-H450	50-P90/M4	
81	125	4.8	8.2	88	34	123	81	125	4.8	144	123	4.1	17.755	-H600	50-P90/M4	
81	126	1.1	8.1	88	34	123	81	126	1.1	143	123	1.0	17.802	-H140	50-P90/M4	
79	129	2.4	7.9	90	33	126	79	129	2.4	140	126	2.1	18.250	-H320	50-P90/M4	
77	132	1.6	7.7	93	32	129	77	132	1.6	136	129	1.4	18.750	-H210	50-P90/M4	
75	136	3.3	7.5	95	31	133	75	136	3.3	133	133	2.8	19.250	-H450	50-P90/M4	
75	137	4.4	7.5	96	31	134	75	137	4.4	132	134	3.8	19.367	-H600	50-P90/M4	

Selection tables, 4-pole motors

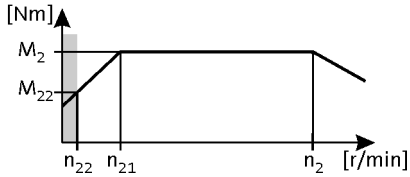

50 Hz: P_N = 1.1 kW
87 Hz: P_N = 1.9 kW

2-stage gearboxes

Mains operation 400 V, 50 Hz			Inverter operation 5 Hz -		- 20 ... 25 Hz		- 50 Hz (1:10)			- 87 Hz (1:17.4)			i	Product		
n_2 [r/min]	M_2 [Nm]	c	n_{22} [r/min]	M_{22} [Nm]	n_{21} [r/min]	M_2 [Nm]	n_2 [r/min]	M_2 [Nm]	c	n_2 [r/min]	M_2 [Nm]	c		g500	m5□□	
73	139	1.0	7.3	98	30	136	73	139	1.0	129	136	0.9	19.750	-H140	50-P90/M4	
70	146	2.0	7.0	103	29	143	70	146	2.0	123	143	1.8	20.731	-H320	50-P90/M4	
66	154	3.9	6.7	108	28	150	66	154	3.9	117	150	3.4	21.750	-H600	50-P90/M4	
66	154	1.4	6.7	108	28	151	66	154	1.4	117	151	1.2	21.802	-H210	50-P90/M4	
66	154	0.9	6.6	108	28	154	66	154	0.9				21.808	-H140	50-P90/M4	
65	156	2.9	6.5	110	27	153	65	156	2.9	115	153	2.5	22.170	-H450	50-P90/M4	
63	163	4.8	6.3	114	26	159	63	163	4.8	110	159	4.1	23.103	-H850	50-P90/M4	
61	168	1.9	6.1	118	25	164	61	168	1.9	107	164	1.6	23.754	-H320	50-P90/M4	
59	172	1.2	5.9	121	25	168	59	172	1.2	105	168	1.0	24.405	-H210	50-P90/M4	
58	177	2.5	5.8	124	24	173	58	177	2.5	102	173	2.2	25.056	-H450	50-P90/M4	
57	178	3.4	5.8	125	24	174	57	178	3.4	101	174	2.9	25.207	-H600	50-P90/M4	
56	182	4.7	5.6	128	23	178	56	182	4.7	99	178	4.0	25.815	-H850	50-P90/M4	
54	190	1.7	5.4	134	22	186	54	190	1.7	95	186	1.6	26.983	-H320	50-P90/M4	
53	191	1.1	5.3	134	22	187	53	191	1.1	94	187	1.1	27.119	-H210	50-P90/M4	
52	195	2.3	5.3	137	22	190	52	195	2.3	93	190	2.3	27.578	-H450	50-P90/M4	
51	200	3.0	5.1	140	21	195	51	200	3.0	90	195	2.9	28.310	-H600	50-P90/M4	
51	200	4.0	5.1	140	21	195	51	200	4.0	90	195	3.9	28.315	-H850	50-P90/M4	
49	209	1.5	4.9	146	20	204	49	209	1.5	86	204	1.5	29.548	-H320	50-P90/M4	
48	214	1.0	4.8	150	20	210	48	214	1.0	84	210	1.0	30.357	-H210	50-P90/M4	
46	220	2.1	4.7	154	19	215	46	220	2.1	82	215	2.0	31.167	-H450	50-P90/M4	
46	221	2.7	4.6	155	19	216	46	221	2.7	81	216	2.6	31.356	-H600	50-P90/M4	
46	223	3.8	4.6	157	19	218	46	223	3.8	81	218	3.7	31.639	-H850	50-P90/M4	
45	228	4.0	4.5	160	19	223	45	228	4.0	79	223	3.9	32.267	-H1500	50-P90/M4	
43	237	1.4	4.3	166	18	232	43	237	1.4	76	232	1.3	33.564	-H320	50-P90/M4	
41	249	2.4	4.1	174	17	243	41	249	2.4	72	243	2.4	35.214	-H600	50-P90/M4	
41	252	4.0	4.1	177	17	246	41	252	4.0	72	246	3.9	35.689	-H1500	50-P90/M4	
41	252	1.8	4.1	177	17	246	41	252	1.8	72	246	1.7	35.689	-H450	50-P90/M4	
39	262	3.2	3.9	184	16	257	39	262	3.2	69	257	3.2	37.190	-H850	50-P90/M4	
37	276	3.5	3.7	194	15	270	37	276	3.5	65	270	3.4	39.160	-H1500	50-P90/M4	
36	285	1.6	3.6	200	15	278	36	285	1.6	63	278	1.6	40.333	-H450	50-P90/M4	
36	286	2.0	3.6	201	15	280	36	286	2.0	63	280	2.0	40.578	-H600	50-P90/M4	
35	293	2.9	3.5	206	14	287	35	293	2.9	61	287	3.0	41.556	-H850	50-P90/M4	
33	306	3.5	3.3	214	14	299	33	306	3.5	59	299	3.6	43.313	-H1500	50-P90/M4	
33	306	1.1	3.3	214	14	299	33	306	1.1	59	299	1.1	43.313	-H450	50-P90/M4	
32	319	2.7	3.2	223	13	312	32	319	2.7	57	312	2.7	45.136	-H850	50-P90/M4	

Selection tables, 4-pole motors

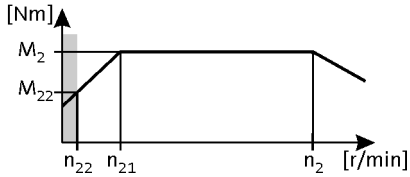

50 Hz: P_N = 1.1 kW
87 Hz: P_N = 1.9 kW

2-stage gearboxes

Mains operation 400 V, 50 Hz			Inverter operation 5 Hz -		- 20 ... 25 Hz		- 50 Hz (1:10)			- 87 Hz (1:17.4)			i	Product		
n_2 [r/min]	M_2 [Nm]	c	n_{22} [r/min]	M_{22} [Nm]	n_{21} [r/min]	M_2 [Nm]	n_2 [r/min]	M_2 [Nm]	c	n_2 [r/min]	M_2 [Nm]	c		g500	m5□□	
32	322	1.9	3.2	226	13	315	32	322	1.9	56	315	1.9	45.571	-H600	50-P90/M4	
30	345	1.1	3.0	242	12	338	30	345	1.1	52	338	1.1	48.950	-H450	50-P90/M4	
29	348	1.3	2.9	244	12	340	29	348	1.3	52	340	1.3	49.247	-H600	50-P90/M4	
29	349	2.7	2.9	245	12	342	29	349	2.7	52	342	2.8	49.500	-H1500	50-P90/M4	
29	356	2.4	2.9	250	12	348	29	356	2.4	51	348	2.4	50.433	-H850	50-P90/M4	
26	386	2.7	2.6	271	11	378	26	386	2.7	47	378	2.8	54.750	-H1500	50-P90/M4	
26	390	1.3	2.6	274	11	382	26	390	1.3	46	382	1.3	55.307	-H600	50-P90/M4	

3-stage gearboxes

Mains operation 400 V, 50 Hz			Inverter operation 5 Hz -		- 20 ... 25 Hz		- 50 Hz (1:10)			- 87 Hz (1:17.4)			i	Product		
n_2 [r/min]	M_2 [Nm]	c	n_{22} [r/min]	M_{22} [Nm]	n_{21} [r/min]	M_2 [Nm]	n_2 [r/min]	M_2 [Nm]	c	n_2 [r/min]	M_2 [Nm]	c		g500	m5□□	
46	217	2.8	4.6	152	19	212	46	217	2.8	82	212	2.4	31.197	-H600	50-P90/M4	
41	244	2.5	4.1	171	17	238	41	244	2.5	73	238	2.1	35.037	-H600	50-P90/M4	
38	263	3.2	3.8	184	16	257	38	263	3.2	68	257	2.8	37.799	-H850	50-P90/M4	
36	278	2.2	3.6	195	15	271	36	278	2.2	64	271	1.9	39.925	-H600	50-P90/M4	
35	287	3.0	3.5	202	15	281	35	287	3.0	62	281	2.5	41.350	-H850	50-P90/M4	
33	304	2.0	3.3	213	14	297	33	304	2.0	58	297	1.7	43.676	-H600	50-P90/M4	
33	307	1.5	3.3	215	14	300	33	307	1.5	58	300	1.3	44.124	-H450	50-P90/M4	
31	321	2.7	3.1	225	13	314	31	321	2.7	55	314	2.6	46.204	-H850	50-P90/M4	
29	341	1.8	3.0	239	12	334	29	341	1.8	52	334	1.7	49.051	-H600	50-P90/M4	
29	347	1.3	2.9	243	12	339	29	347	1.3	51	339	1.3	49.867	-H450	50-P90/M4	
27	367	2.3	2.7	257	11	359	27	367	2.3	48	359	2.3	52.743	-H850	50-P90/M4	
26	387	1.6	2.6	272	11	379	26	387	1.6	46	379	1.5	55.710	-H600	50-P90/M4	
26	393	1.2	2.6	275	11	384	26	393	1.2	45	384	1.1	56.469	-H450	50-P90/M4	
25	410	2.1	2.5	287	10	401	25	410	2.1	43	401	2.0	58.933	-H850	50-P90/M4	
23	429	1.1	2.3	301	9.7	420	23	429	1.1	41	420	1.0	61.774	-H450	50-P90/M4	
23	435	1.4	2.3	305	9.6	425	23	435	1.4	41	425	1.3	62.566	-H600	50-P90/M4	
22	449	1.9	2.2	315	9.3	439	22	449	1.9	40	439	1.8	64.610	-H850	50-P90/M4	
21	474	1.3	2.1	333	8.8	464	21	474	1.3	37	464	1.2	68.244	-H600	50-P90/M4	
21	485	0.9	2.1	340	8.6	475	21	485	0.9	37	475	0.9	69.813	-H450	50-P90/M4	
20	495	3.0	2.0	347	8.4	484	20	495	3.0	36	484	3.0	71.238	-H1500	50-P90/M4	
20	502	1.7	2.0	352	8.3	491	20	502	1.7	35	491	1.7	72.193	-H850	50-P90/M4	
19	533	1.1	1.9	374	7.8	521	19	533	1.1	33	521	1.1	76.643	-H600	50-P90/M4	
18	548	2.7	1.8	384	7.6	536	18	548	2.7	32	536	2.7	78.794	-H1500	50-P90/M4	
18	548	0.8	1.8	384	7.6	548	18	548	0.8				78.794	-H450	50-P90/M4	
17	585	1.5	1.7	410	7.1	572	17	585	1.5	30	572	1.5	84.096	-H850	50-P90/M4	
16	618	1.0	1.6	433	6.8	604	16	618	1.0	29	604	1.0	88.826	-H600	50-P90/M4	
15	653	1.3	1.5	458	6.4	639	15	653	1.3	27	639	1.3	93.966	-H850	50-P90/M4	
15	694	0.9	1.5	486	6.0	678	15	694	0.9	26	678	0.9	99.757	-H600	50-P90/M4	

Selection tables, 4-pole motors

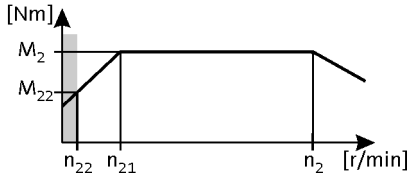

50 Hz: P_N = 1.1 kW
87 Hz: P_N = 1.9 kW

3-stage gearboxes

Mains operation 400 V, 50 Hz			Inverter operation 5 Hz -		- 20 ... 25 Hz		- 50 Hz (1:10)			- 87 Hz (1:17.4)			i	Product		
n_2 [r/min]	M_2 [Nm]	c	n_{22} [r/min]	M_{22} [Nm]	n_{21} [r/min]	M_2 [Nm]	n_2 [r/min]	M_2 [Nm]	c	n_2 [r/min]	M_2 [Nm]	c		g500	m5□□	
14	727	1.2	1.4	510	5.7	711	14	727	1.2	24	711	1.2	104.607	-H850	50-P90/M4	
13	790	1.9	1.3	554	5.3	772	13	790	1.9	23	772	1.9	113.585	-H1500	50-P90/M4	
12	813	1.1	1.2	570	5.1	795	12	813	1.1	22	795	1.1	116.884	-H850	50-P90/M4	
12	873	1.7	1.2	612	4.8	854	12	873	1.7	20	854	1.8	125.632	-H1500	50-P90/M4	
11	941	0.9	1.1	660	4.4	921	11	941	0.9	19	921	0.9	135.373	-H850	50-P90/M4	
10	968	1.6	1.0	679	4.3	947	10	968	1.6	18	947	1.6	139.211	-H1500	50-P90/M4	
9.5	1052	0.8	1.0	737	4.0	1029	9.5	1052	0.8	17	1029	0.8	151.262	-H850	50-P90/M4	
9.4	1070	1.4	0.9	751	3.9	1047	9.4	1070	1.4	17	1047	1.4	153.976	-H1500	50-P90/M4	
8.5	1175	2.6	0.9	824	3.6	1149	8.5	1175	2.6	15	1149	2.6	168.993	-H3000	50-P90/M4	
7.9	1271	1.2	0.8	891	3.3	1243	7.9	1271	1.2	14	1243	1.2	182.844	-H1500	50-P90/M4	
7.8	1290	2.3	0.8	905	3.2	1262	7.8	1290	2.3	14	1262	2.4	185.615	-H3000	50-P90/M4	
7.1	1406	1.1	0.7	986	3.0	1375	7.1	1406	1.1	13	1375	1.1	202.237	-H1500	50-P90/M4	
7.0	1426	2.1	0.7	1000	2.9	1395	7.0	1426	2.1	12	1395	2.2	205.096	-H3000	50-P90/M4	
6.5	1543	1.0	0.7	1082	2.7	1509	6.5	1543	1.0	12	1509	1.0	221.907	-H1500	50-P90/M4	
6.4	1566	1.9	0.6	1098	2.7	1532	6.4	1566	1.9	11	1532	2.0	225.269	-H3000	50-P90/M4	
5.9	1706	0.9	0.6	1196	2.4	1669	5.9	1706	0.9	10	1669	0.9	245.442	-H1500	50-P90/M4	
5.6	1802	1.7	0.6	1264	2.3	1763	5.6	1802	1.7	9.8	1763	1.7	259.250	-H3000	50-P90/M4	
5.1	1980	1.5	0.5	1388	2.1	1936	5.1	1980	1.5	9.0	1936	1.6	284.750	-H3000	50-P90/M4	

Selection tables, 4-pole motors

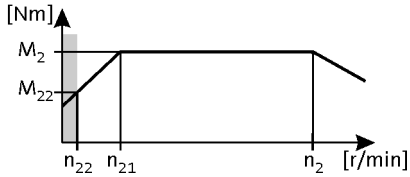

50 Hz: P_N = 1.5 kW
87 Hz: P_N = 2.6 kW

2-stage gearboxes

Mains operation 400 V, 50 Hz			Inverter operation 5 Hz -		- 20 ... 25 Hz		- 50 Hz (1:10)			- 87 Hz (1:17.4)			i	Product		
n_2 [r/min]	M_2 [Nm]	c	n_{22} [r/min]	M_{22} [Nm]	n_{21} [r/min]	M_2 [Nm]	n_2 [r/min]	M_2 [Nm]	c	n_2 [r/min]	M_2 [Nm]	c		g500	m5□□	
441	31	2.6	44	22	184	31	441	31	2.6	781	31	2.2	3.267	-H140	50-P90/L4	
430	32	1.9	43	23	179	32	430	32	1.9	761	32	1.6	3.354	-H100	50-P90/L4	
426	33	3.9	43	23	177	32	426	33	3.9	753	32	3.3	3.389	-H210	50-P90/L4	
426	33	4.3	43	23	177	32	426	33	4.3	753	32	3.7	3.389	-H320	50-P90/L4	
322	43	2.2	32	30	134	42	322	43	2.2	570	42	1.9	4.480	-H140	50-P90/L4	
314	44	1.6	32	31	130	43	314	44	1.6	555	43	1.4	4.600	-H100	50-P90/L4	
310	45	3.2	31	32	129	44	310	45	3.2	549	44	2.7	4.648	-H210	50-P90/L4	
310	45	4.2	31	32	129	44	310	45	4.2	549	44	3.6	4.648	-H320	50-P90/L4	
279	50	1.5	28	35	116	50	279	50	1.5				5.167	-H100	50-P90/L4	
258	54	3.0	26	38	108	53	258	54	3.0	457	53	2.5	5.583	-H210	50-P90/L4	
252	55	4.2	25	39	105	54	252	55	4.2	445	54	3.6	5.733	-H600	50-P90/L4	
252	55	1.9	25	39	105	54	252	55	1.9	445	54	1.6	5.733	-H140	50-P90/L4	
245	57	1.4	25	40	102	56	245	57	1.4	434	56	1.2	5.887	-H100	50-P90/L4	
239	58	4.2	24	41	99	57	239	58	4.2	422	57	3.6	6.045	-H450	50-P90/L4	
237	59	3.9	24	41	99	57	237	59	3.9	420	57	3.3	6.083	-H320	50-P90/L4	
231	60	2.6	23	42	96	59	231	60	2.6	408	59	2.2	6.250	-H210	50-P90/L4	
230	60	1.7	23	43	96	59	230	60	1.7	407	59	1.5	6.272	-H140	50-P90/L4	
224	62	1.3	23	44	93	61	224	62	1.3	396	61	1.1	6.440	-H100	50-P90/L4	
218	64	4.3	22	45	91	62	218	64	4.3	386	62	3.7	6.613	-H450	50-P90/L4	
209	67	3.3	21	47	87	65	209	67	3.3	369	65	2.8	6.910	-H320	50-P90/L4	
204	68	1.3	21	48	85	67	204	68	1.3	360	67	1.1	7.086	-H100	50-P90/L4	
198	70	1.5	20	49	83	70	198	70	1.5				7.269	-H140	50-P90/L4	
188	74	2.3	19	52	78	72	188	74	2.3	333	72	2.0	7.657	-H210	50-P90/L4	
180	77	1.5	18	54	75	76	180	77	1.5	319	76	1.3	8.000	-H140	50-P90/L4	
176	79	1.2	18	56	73	78	176	79	1.2	311	78	1.0	8.214	-H100	50-P90/L4	
173	80	3.1	17	57	72	79	173	80	3.1	306	79	2.7	8.343	-H320	50-P90/L4	
168	83	2.1	17	58	70	81	168	83	2.1	298	81	1.8	8.571	-H210	50-P90/L4	
160	87	1.3	16	61	67	85	160	87	1.3	283	85	1.2	9.029	-H140	50-P90/L4	
159	87	1.1	16	62	66	86	159	87	1.1	281	86	0.9	9.068	-H100	50-P90/L4	
152	91	2.6	15	64	63	89	152	91	2.6	269	89	2.2	9.477	-H320	50-P90/L4	
147	94	1.9	15	67	61	92	147	94	1.9	260	92	1.7	9.799	-H210	50-P90/L4	
147	94	1.3	15	67	61	93	147	94	1.3	260	93	1.1	9.800	-H140	50-P90/L4	
145	96	4.0	15	68	60	94	145	96	4.0	256	94	3.4	9.965	-H450	50-P90/L4	
143	97	1.0	14	68	60	95	143	97	1.0	254	95	0.9	10.063	-H100	50-P90/L4	
135	103	2.6	14	73	56	101	135	103	2.6	239	101	2.2	10.677	-H320	50-P90/L4	

Selection tables, 4-pole motors

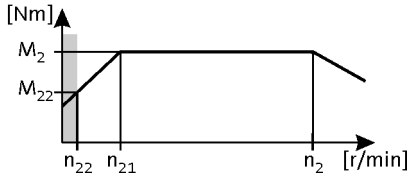

50 Hz: P_N = 1.5 kW
87 Hz: P_N = 2.6 kW

2-stage gearboxes

Mains operation 400 V, 50 Hz			Inverter operation 5 Hz -		- 20 ... 25 Hz		- 50 Hz (1:10)			- 87 Hz (1:17.4)			i	Product		
n_2 [r/min]	M_2 [Nm]	c	n_{22} [r/min]	M_{22} [Nm]	n_{21} [r/min]	M_2 [Nm]	n_2 [r/min]	M_2 [Nm]	c	n_2 [r/min]	M_2 [Nm]	c		g500	m5□□	
135	103	1.8	14	73	56	101	135	103	1.8	238	101	1.6	10.720	-H210	50-P90/L4	
128	109	3.7	13	77	53	106	128	109	3.7	227	106	3.2	11.262	-H450	50-P90/L4	
127	109	4.2	13	77	53	107	127	109	4.2	225	107	3.6	11.330	-H600	50-P90/L4	
127	109	0.9	13	77	53	109	127	109	0.9				11.360	-H100	50-P90/L4	
125	111	1.2	13	79	52	109	125	111	1.2	221	109	1.0	11.554	-H140	50-P90/L4	
124	113	2.4	12	79	51	110	124	113	2.4	219	110	2.1	11.680	-H320	50-P90/L4	
120	116	1.6	12	82	50	113	120	116	1.6	213	113	1.4	12.000	-H210	50-P90/L4	
119	117	2.2	12	82	50	114	119	117	2.2	210	114	1.9	12.128	-H320	50-P90/L4	
117	119	3.5	12	84	49	116	117	119	3.5	207	116	3.0	12.320	-H450	50-P90/L4	
116	119	4.3	12	84	48	117	116	119	4.3	206	117	3.7	12.395	-H600	50-P90/L4	
114	122	1.1	12	86	48	119	114	122	1.1	202	119	0.9	12.640	-H140	50-P90/L4	
114	122	0.8	12	86	47	122	114	122	0.8				12.653	-H100	50-P90/L4	
109	128	2.1	11	90	45	125	109	128	2.1	192	125	1.8	13.268	-H320	50-P90/L4	
106	132	1.5	11	93	44	129	106	132	1.5	187	129	1.3	13.673	-H210	50-P90/L4	
104	134	3.2	10	94	43	131	104	134	3.2	184	131	2.7	13.905	-H450	50-P90/L4	
104	134	4.3	10	95	43	131	104	134	4.3	183	131	3.7	13.920	-H600	50-P90/L4	
103	135	1.0	10	95	43	132	103	135	1.0	183	132	0.9	13.957	-H140	50-P90/L4	
100	140	4.2	10	98	41	137	100	140	4.2	176	137	3.6	14.490	-H850	50-P90/L4	
97	144	2.0	9.7	101	40	141	97	144	2.0	171	141	1.8	14.898	-H320	50-P90/L4	
94	148	1.4	9.5	104	39	144	94	148	1.4	167	144	1.2	15.306	-H210	50-P90/L4	
92	151	2.9	9.2	107	38	148	92	151	2.9	162	148	2.5	15.714	-H450	50-P90/L4	
91	152	3.9	9.2	107	38	149	91	152	3.9	161	149	3.4	15.810	-H600	50-P90/L4	
89	155	0.9	9.0	110	37	155	89	155	0.9				16.122	-H140	50-P90/L4	
89	156	4.2	9.0	110	37	153	89	156	4.2	158	153	3.6	16.190	-H850	50-P90/L4	
86	161	1.3	8.7	114	36	158	86	161	1.3	152	158	1.1	16.750	-H210	50-P90/L4	
85	163	1.7	8.6	115	36	160	85	163	1.7	151	160	1.5	16.923	-H320	50-P90/L4	
85	164	2.7	8.5	116	35	161	85	164	2.7	150	161	2.3	17.033	-H450	50-P90/L4	
81	171	3.5	8.2	121	34	168	81	171	3.5	144	168	3.0	17.755	-H600	50-P90/L4	
81	172	0.8	8.1	121	34	172	81	172	0.8				17.802	-H140	50-P90/L4	
79	176	1.8	7.9	124	33	172	79	176	1.8	140	172	1.5	18.250	-H320	50-P90/L4	
77	181	1.2	7.7	127	32	177	77	181	1.2	136	177	1.0	18.750	-H210	50-P90/L4	
75	186	2.4	7.5	131	31	182	75	186	2.4	133	182	2.1	19.250	-H450	50-P90/L4	
75	187	3.2	7.5	132	31	183	75	187	3.2	132	183	2.8	19.367	-H600	50-P90/L4	
70	200	1.5	7.0	141	29	196	70	200	1.5	123	196	1.3	20.731	-H320	50-P90/L4	
66	210	2.9	6.7	148	28	205	66	210	2.9	117	205	2.5	21.750	-H600	50-P90/L4	

Selection tables, 4-pole motors

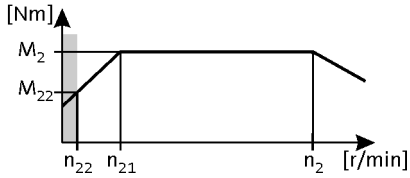

50 Hz: P_N = 1.5 kW
87 Hz: P_N = 2.6 kW

2-stage gearboxes

Mains operation 400 V, 50 Hz			Inverter operation 5 Hz -		- 20 ... 25 Hz		- 50 Hz (1:10)			- 87 Hz (1:17.4)			i	Product		
n_2 [r/min]	M_2 [Nm]	c	n_{22} [r/min]	M_{22} [Nm]	n_{21} [r/min]	M_2 [Nm]	n_2 [r/min]	M_2 [Nm]	c	n_2 [r/min]	M_2 [Nm]	c		g500	m5□□	
66	210	1.0	6.7	148	28	206	66	210	1.0	117	206	0.9	21.802	-H210	50-P90/L4	
65	214	2.1	6.5	151	27	209	65	214	2.1	115	209	1.8	22.170	-H450	50-P90/L4	
62	223	3.5	6.3	157	26	218	62	223	3.5	111	218	3.0	23.103	-H850	50-P90/L4	
61	229	1.4	6.1	161	25	224	61	229	1.4	107	224	1.2	23.754	-H320	50-P90/L4	
59	235	0.9	5.9	166	25	235	59	235	0.9				24.405	-H210	50-P90/L4	
58	241	1.9	5.8	170	24	237	58	241	1.9	102	237	1.6	25.056	-H450	50-P90/L4	
57	243	2.5	5.8	171	24	238	57	243	2.5	101	238	2.1	25.207	-H600	50-P90/L4	
56	249	3.4	5.6	175	23	244	56	249	3.4	99	244	2.9	25.815	-H850	50-P90/L4	
53	260	1.2	5.4	183	22	255	53	260	1.2	95	255	1.2	26.983	-H320	50-P90/L4	
52	266	1.7	5.3	187	22	260	52	266	1.7	93	260	1.7	27.578	-H450	50-P90/L4	
51	273	2.2	5.1	192	21	267	51	273	2.2	90	267	2.1	28.310	-H600	50-P90/L4	
51	273	2.9	5.1	192	21	267	51	273	2.9	90	267	2.9	28.315	-H850	50-P90/L4	
49	285	1.1	4.9	201	20	279	49	285	1.1	86	279	1.1	29.548	-H320	50-P90/L4	
46	300	1.5	4.7	212	19	294	46	300	1.5	82	294	1.5	31.167	-H450	50-P90/L4	
46	302	2.0	4.6	213	19	296	46	302	2.0	81	296	1.9	31.356	-H600	50-P90/L4	
46	305	2.8	4.6	215	19	299	46	305	2.8	81	299	2.7	31.639	-H850	50-P90/L4	
45	311	2.9	4.5	219	19	305	45	311	2.9	79	305	2.9	32.267	-H1500	50-P90/L4	
43	323	1.0	4.3	228	18	317	43	323	1.0	76	317	1.0	33.564	-H320	50-P90/L4	
41	339	1.8	4.1	239	17	332	41	339	1.8	73	332	1.7	35.214	-H600	50-P90/L4	
40	344	2.9	4.1	242	17	337	40	344	2.9	72	337	2.9	35.689	-H1500	50-P90/L4	
40	344	1.3	4.1	242	17	337	40	344	1.3	72	337	1.3	35.689	-H450	50-P90/L4	
39	358	2.4	3.9	253	16	351	39	358	2.4	69	351	2.3	37.190	-H850	50-P90/L4	
37	377	2.6	3.7	266	15	370	37	377	2.6	65	370	2.5	39.160	-H1500	50-P90/L4	
36	389	1.2	3.6	274	15	381	36	389	1.2	63	381	1.2	40.333	-H450	50-P90/L4	
36	391	1.4	3.6	276	15	383	36	391	1.4	63	383	1.5	40.578	-H600	50-P90/L4	
35	400	2.1	3.5	282	14	392	35	400	2.1	61	392	2.2	41.556	-H850	50-P90/L4	
33	417	2.6	3.3	294	14	409	33	417	2.6	59	409	2.6	43.313	-H1500	50-P90/L4	
32	435	2.0	3.2	307	13	426	32	435	2.0	57	426	2.0	45.136	-H850	50-P90/L4	
32	439	1.4	3.2	310	13	430	32	439	1.4	56	430	1.4	45.571	-H600	50-P90/L4	
29	475	1.0	2.9	335	12	465	29	475	1.0	52	465	1.0	49.247	-H600	50-P90/L4	
29	477	2.0	2.9	336	12	467	29	477	2.0	52	467	2.0	49.500	-H1500	50-P90/L4	
29	486	1.8	2.9	343	12	476	29	486	1.8	51	476	1.8	50.433	-H850	50-P90/L4	
26	528	2.0	2.6	372	11	517	26	528	2.0	47	517	2.0	54.750	-H1500	50-P90/L4	
26	533	1.0	2.6	376	11	522	26	533	1.0	46	522	1.0	55.307	-H600	50-P90/L4	

Selection tables, 4-pole motors

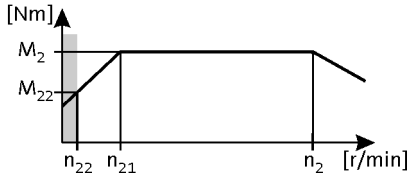

50 Hz: P_N = 1.5 kW
87 Hz: P_N = 2.6 kW

3-stage gearboxes

Mains operation 400 V, 50 Hz			Inverter operation 5 Hz -		- 20 ... 25 Hz		- 50 Hz (1:10)			- 87 Hz (1:17.4)			i	Product		
n_2 [r/min]	M_2 [Nm]	c	n_{22} [r/min]	M_{22} [Nm]	n_{21} [r/min]	M_2 [Nm]	n_2 [r/min]	M_2 [Nm]	c	n_2 [r/min]	M_2 [Nm]	c		g500	m5□□	
46	296	2.0	4.6	209	19	290	46	296	2.0	82	290	1.7	31.197	-H600	50-P90/L4	
41	333	1.8	4.1	234	17	326	41	333	1.8	73	326	1.5	35.037	-H600	50-P90/L4	
38	359	2.4	3.8	253	16	351	38	359	2.4	68	351	2.0	37.799	-H850	50-P90/L4	
36	379	1.6	3.6	267	15	371	36	379	1.6	64	371	1.4	39.925	-H600	50-P90/L4	
35	393	2.2	3.5	277	15	384	35	393	2.2	62	384	1.9	41.350	-H850	50-P90/L4	
33	415	1.5	3.3	292	14	406	33	415	1.5	58	406	1.2	43.676	-H600	50-P90/L4	
33	419	1.1	3.3	295	14	410	33	419	1.1	58	410	0.9	44.124	-H450	50-P90/L4	
31	439	1.9	3.1	309	13	430	31	439	1.9	55	430	1.9	46.204	-H850	50-P90/L4	
29	466	1.3	3.0	328	12	456	29	466	1.3	52	456	1.3	49.051	-H600	50-P90/L4	
29	473	1.0	2.9	334	12	464	29	473	1.0	51	464	0.9	49.867	-H450	50-P90/L4	
27	501	1.7	2.7	353	11	490	27	501	1.7	48	490	1.7	52.743	-H850	50-P90/L4	
26	529	1.1	2.6	373	11	518	26	529	1.1	46	518	1.1	55.710	-H600	50-P90/L4	
26	536	0.8	2.6	378	11	525	26	536	0.8	45	525	0.8	56.469	-H450	50-P90/L4	
25	559	1.5	2.5	394	10	548	25	559	1.5	43	548	1.5	58.933	-H850	50-P90/L4	
23	594	1.0	2.3	419	9.6	582	23	594	1.0	41	582	1.0	62.566	-H600	50-P90/L4	
22	613	1.4	2.2	432	9.3	601	22	613	1.4	40	601	1.4	64.610	-H850	50-P90/L4	
21	648	0.9	2.1	457	8.8	635	21	648	0.9	37	635	0.9	68.244	-H600	50-P90/L4	
20	676	2.2	2.0	477	8.4	662	20	676	2.2	36	662	2.2	71.238	-H1500	50-P90/L4	
20	685	1.2	2.0	483	8.3	671	20	685	1.2	35	671	1.2	72.193	-H850	50-P90/L4	
19	728	0.8	1.9	513	7.8	728	19	728	0.8				76.643	-H600	50-P90/L4	
18	748	2.0	1.8	527	7.6	733	18	748	2.0	32	733	2.0	78.794	-H1500	50-P90/L4	
17	798	1.1	1.7	563	7.1	782	17	798	1.1	30	782	1.1	84.096	-H850	50-P90/L4	
15	892	1.0	1.5	629	6.4	874	15	892	1.0	27	874	1.0	93.966	-H850	50-P90/L4	
14	993	0.9	1.4	700	5.7	973	14	993	0.9	24	973	0.9	104.607	-H850	50-P90/L4	
13	1078	1.4	1.3	760	5.3	1056	13	1078	1.4	23	1056	1.4	113.585	-H1500	50-P90/L4	
12	1193	1.3	1.2	840	4.8	1168	12	1193	1.3	20	1168	1.3	125.632	-H1500	50-P90/L4	
11	1240	4.0	1.1	682	5.5	1216	11	1240	4.0	20	1216	4.1	130.842	-H5000	40-P90/L4	
10	1322	1.1	1.0	931	4.3	1294	10	1322	1.1	18	1294	1.2	139.211	-H1500	50-P90/L4	
9.9	1379	3.6	1.0	758	5.0	1352	9.9	1379	3.6	18	1352	3.7	145.489	-H5000	40-P90/L4	
9.4	1462	1.0	0.9	1030	3.9	1432	9.4	1462	1.0	17	1432	1.1	153.976	-H1500	50-P90/L4	
8.6	1589	3.2	0.9	874	4.3	1557	8.6	1589	3.2	15	1557	3.2	167.626	-H5000	40-P90/L4	
8.5	1604	1.9	0.9	1131	3.6	1571	8.5	1604	1.9	15	1571	1.9	168.993	-H3000	50-P90/L4	
7.9	1736	0.9	0.8	1223	3.3	1700	7.9	1736	0.9	14	1700	0.9	182.844	-H1500	50-P90/L4	
7.8	1762	1.7	0.8	1242	3.2	1726	7.8	1762	1.7	14	1726	1.7	185.615	-H3000	50-P90/L4	
7.8	1765	2.8	0.8	971	3.9	1731	7.8	1765	2.8	14	1731	2.9	186.282	-H5000	40-P90/L4	

Selection tables, 4-pole motors

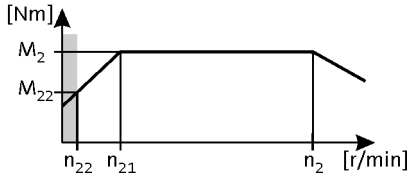

50 Hz: P_N = 1.5 kW
87 Hz: P_N = 2.6 kW

3-stage gearboxes

Mains operation 400 V, 50 Hz			Inverter operation 5 Hz -		- 20 ... 25 Hz		- 50 Hz (1:10)			- 87 Hz (1:17.4)			i	Product		
n_2 [r/min]	M_2 [Nm]	c	n_{22} [r/min]	M_{22} [Nm]	n_{21} [r/min]	M_2 [Nm]	n_2 [r/min]	M_2 [Nm]	c	n_2 [r/min]	M_2 [Nm]	c		g500	m5□□	
7.0	1947	1.5	0.7	1372	2.9	1907	7.0	1947	1.5	12	1907	1.6	205.096	-H3000	50-P90/L4	
6.9	1977	2.5	0.7	1088	3.5	1939	6.9	1977	2.5	12	1939	2.6	208.671	-H5000	40-P90/L4	
6.4	2138	1.4	0.6	1507	2.7	2094	6.4	2138	1.4	11	2094	1.4	225.269	-H3000	50-P90/L4	
6.1	2237	2.2	0.6	1230	3.1	2193	6.1	2237	2.2	11	2193	2.3	236.034	-H5000	40-P90/L4	
5.7	2410	2.1	0.6	1326	2.9	2363	5.7	2410	2.1	10	2363	2.1	254.341	-H5000	40-P90/L4	
5.6	2461	1.2	0.6	1734	2.3	2410	5.6	2461	1.2	9.8	2410	1.2	259.250	-H3000	50-P90/L4	
5.3	2561	2.0	0.5	1409	2.7	2510	5.3	2561	2.0	9.5	2510	2.0	270.238	-H5000	40-P90/L4	
5.1	2703	1.1	0.5	1905	2.1	2648	5.1	2703	1.1	9.0	2648	1.1	284.750	-H3000	50-P90/L4	
4.6	3003	1.7	0.5	1652	2.3	2944	4.6	3003	1.7	8.1	2944	1.7	316.900	-H5000	40-P90/L4	
4.2	3262	1.5	0.4	1794	2.1	3197	4.2	3262	1.5	7.4	3197	1.6	344.169	-H5000	40-P90/L4	
3.9	3533	1.4	0.4	1944	1.9	3464	3.9	3533	1.4	6.9	3464	1.4	372.850	-H5000	40-P90/L4	

Selection tables, 4-pole motors

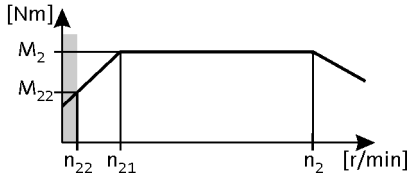

50 Hz: P_N = 2.2 kW
87 Hz: P_N = 3.9 kW

2-stage gearboxes

Mains operation 400 V, 50 Hz			Inverter operation 5 Hz -		- 20 ... 25 Hz		- 50 Hz (1:10)			- 87 Hz (1:17.4)			i	Product		
n_2 [r/min]	M_2 [Nm]	c	n_{22} [r/min]	M_{22} [Nm]	n_{21} [r/min]	M_2 [Nm]	n_2 [r/min]	M_2 [Nm]	c	n_2 [r/min]	M_2 [Nm]	c		g500	m5□□	
445	46	5.2	44	32	184	46	445	46	5.2				3.267	-H600	50-P100/M4	
429	48	2.7	43	33	177	48	429	48	2.7				3.389	-H210	50-P100/M4	
429	48	3.5	43	33	177	48	429	48	3.5	756	48	2.9	3.389	-H320	50-P100/M4	
422	48	5.3	42	34	174	48	422	48	5.3				3.444	-H450	50-P100/M4	
324	63	4.7	32	44	134	63	324	63	4.7	572	63	3.9	4.480	-H600	50-P100/M4	
312	65	2.2	31	46	129	65	312	65	2.2	551	66	1.8	4.648	-H210	50-P100/M4	
312	65	2.9	31	46	129	65	312	65	2.9	551	66	2.4	4.648	-H320	50-P100/M4	
307	66	4.4	31	46	127	66	307	66	4.4	542	67	3.7	4.724	-H450	50-P100/M4	
271	75	5.7	27	53	112	75	271	75	5.7	477	76	4.8	5.368	-H850	50-P100/M4	
260	78	2.0	26	55	108	78	260	78	2.0				5.583	-H210	50-P100/M4	
256	80	4.0	26	56	106	80	256	80	4.0				5.678	-H450	50-P100/M4	
253	80	4.2	25	56	105	80	253	80	4.2	447	81	3.5	5.733	-H600	50-P100/M4	
240	85	3.8	24	59	99	85	240	85	3.8	424	85	3.2	6.045	-H450	50-P100/M4	
239	85	2.7	24	60	99	85	239	85	2.7				6.083	-H320	50-P100/M4	
232	88	1.8	23	61	96	88	232	88	1.8				6.250	-H210	50-P100/M4	
225	91	4.5	23	63	93	91	225	91	4.5				6.456	-H600	50-P100/M4	
220	93	3.6	22	65	91	93	220	93	3.6	387	93	3.0	6.613	-H450	50-P100/M4	
210	97	2.3	21	68	87	97	210	97	2.3				6.910	-H320	50-P100/M4	
200	102	4.3	20	71	83	102	200	102	4.3				7.250	-H600	50-P100/M4	
190	107	1.6	19	75	78	107	190	107	1.6				7.657	-H210	50-P100/M4	
187	109	3.2	19	76	77	109	187	109	3.2	329	110	2.7	7.787	-H450	50-P100/M4	
174	117	2.1	17	82	72	117	174	117	2.1	307	118	1.8	8.343	-H320	50-P100/M4	
169	120	1.4	17	84	70	120	169	120	1.4				8.571	-H210	50-P100/M4	
165	124	3.0	17	86	68	124	165	124	3.0	291	124	2.5	8.800	-H450	50-P100/M4	
164	124	3.9	16	87	68	124	164	124	3.9	289	125	3.3	8.853	-H600	50-P100/M4	
153	133	1.8	15	93	63	133	153	133	1.8				9.477	-H320	50-P100/M4	
148	138	1.3	15	96	61	138	148	138	1.3				9.799	-H210	50-P100/M4	
146	140	3.7	15	97	60	140	146	140	3.7	258	140	3.0	9.943	-H600	50-P100/M4	
146	140	2.8	15	98	60	140	146	140	2.8	257	141	2.3	9.965	-H450	50-P100/M4	
143	142	4.7	14	99	59	142	143	142	4.7	253	143	3.9	10.143	-H850	50-P100/M4	
136	150	1.8	14	105	56	150	136	150	1.8	240	151	1.5	10.677	-H320	50-P100/M4	
135	150	1.3	14	105	56	150	135	150	1.3	239	151	1.1	10.720	-H210	50-P100/M4	
129	158	2.5	13	110	53	158	129	158	2.5	228	159	2.1	11.262	-H450	50-P100/M4	
128	159	3.4	13	111	53	159	128	159	3.4	226	160	2.8	11.330	-H600	50-P100/M4	
128	159	4.4	13	111	53	159	128	159	4.4	226	160	3.6	11.360	-H850	50-P100/M4	

Selection tables, 4-pole motors

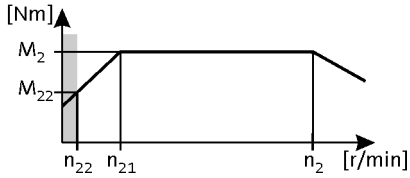

50 Hz: P_N = 2.2 kW
87 Hz: P_N = 3.9 kW

2-stage gearboxes

Mains operation 400 V, 50 Hz			Inverter operation 5 Hz -		- 20 ... 25 Hz		- 50 Hz (1:10)			- 87 Hz (1:17.4)			i	Product		
n_2 [r/min]	M_2 [Nm]	c	n_{22} [r/min]	M_{22} [Nm]	n_{21} [r/min]	M_2 [Nm]	n_2 [r/min]	M_2 [Nm]	c	n_2 [r/min]	M_2 [Nm]	c		g500	m5□□	
124	164	1.7	12	115	51	164	124	164	1.7	219	165	1.4	11.680	-H320	50-P100/M4	
121	168	1.1	12	118	50	168	121	168	1.1				12.000	-H210	50-P100/M4	
120	170	1.5	12	119	50	170	120	170	1.5	211	171	1.2	12.128	-H320	50-P100/M4	
118	173	2.4	12	121	49	173	118	173	2.4	208	174	2.0	12.320	-H450	50-P100/M4	
118	174	5.7	12	121	49	174	118	174	5.7	207	174	4.8	12.362	-H1500	50-P100/M4	
117	174	3.2	12	122	48	174	117	174	3.2	207	175	2.7	12.395	-H600	50-P100/M4	
114	178	4.1	11	124	47	178	114	178	4.1	202	179	3.4	12.693	-H850	50-P100/M4	
109	186	1.4	11	130	45	186	109	186	1.4	193	187	1.2	13.268	-H320	50-P100/M4	
106	192	5.7	11	134	44	192	106	192	5.7	187	193	4.8	13.673	-H1500	50-P100/M4	
106	192	1.1	11	134	44	192	106	192	1.1	187	193	0.9	13.673	-H210	50-P100/M4	
104	195	2.2	10	136	43	195	104	195	2.2	184	196	1.8	13.905	-H450	50-P100/M4	
104	195	3.0	10	136	43	195	104	195	3.0	184	196	2.5	13.920	-H600	50-P100/M4	
100	203	3.7	10	142	41	203	100	203	3.7	177	204	3.1	14.490	-H850	50-P100/M4	
98	209	1.4	9.7	146	40	209	98	209	1.4	172	210	1.2	14.898	-H320	50-P100/M4	
95	215	0.9	9.5	150	39	215	95	215	0.9				15.306	-H210	50-P100/M4	
92	221	2.0	9.2	154	38	221	92	221	2.0	163	222	1.7	15.714	-H450	50-P100/M4	
92	222	2.7	9.2	155	38	222	92	222	2.7	162	223	2.3	15.810	-H600	50-P100/M4	
90	227	3.5	9.0	159	37	227	90	227	3.5	158	228	2.9	16.190	-H850	50-P100/M4	
87	235	0.9	8.7	164	36	235	87	235	0.9				16.750	-H210	50-P100/M4	
86	238	1.2	8.6	166	36	238	86	238	1.2	151	239	1.0	16.923	-H320	50-P100/M4	
85	239	1.9	8.5	167	35	239	85	239	1.9	150	240	1.6	17.033	-H450	50-P100/M4	
82	249	3.3	8.2	174	34	249	82	249	3.3	144	250	2.7	17.750	-H850	50-P100/M4	
82	249	2.4	8.2	174	34	249	82	249	2.4	144	250	2.0	17.755	-H600	50-P100/M4	
80	256	1.2	7.9	179	33	256	80	256	1.2	140	257	1.0	18.250	-H320	50-P100/M4	
75	270	1.7	7.5	189	31	270	75	270	1.7	133	271	1.4	19.250	-H450	50-P100/M4	
75	272	2.2	7.5	190	31	272	75	272	2.2	132	273	1.8	19.367	-H600	50-P100/M4	
73	278	3.0	7.3	194	30	278	73	278	3.0	129	280	2.5	19.833	-H850	50-P100/M4	
71	288	4.1	7.1	201	29	288	71	288	4.1	125	290	3.4	20.533	-H1500	50-P100/M4	
70	291	1.0	7.0	203	29	291	70	291	1.0	124	292	0.9	20.731	-H320	50-P100/M4	
67	305	2.0	6.7	213	28	305	67	305	2.0	118	307	1.6	21.750	-H600	50-P100/M4	
66	311	1.5	6.5	217	27	311	66	311	1.5	116	313	1.2	22.170	-H450	50-P100/M4	
64	319	4.1	6.4	223	26	319	64	319	4.1	113	320	3.4	22.711	-H1500	50-P100/M4	
63	324	2.6	6.3	226	26	324	63	324	2.6	111	326	2.2	23.103	-H850	50-P100/M4	
58	350	3.5	5.8	244	24	350	58	350	3.5	103	352	2.9	24.933	-H1500	50-P100/M4	
58	352	1.3	5.8	246	24	352	58	352	1.3	102	353	1.1	25.056	-H450	50-P100/M4	

Selection tables, 4-pole motors

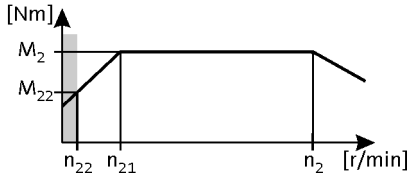

50 Hz: P_N = 2.2 kW
87 Hz: P_N = 3.9 kW

2-stage gearboxes

Mains operation 400 V, 50 Hz			Inverter operation 5 Hz -		- 20 ... 25 Hz		- 50 Hz (1:10)			- 87 Hz (1:17.4)			i	Product		
n_2 [r/min]	M_2 [Nm]	c	n_{22} [r/min]	M_{22} [Nm]	n_{21} [r/min]	M_2 [Nm]	n_2 [r/min]	M_2 [Nm]	c	n_2 [r/min]	M_2 [Nm]	c		g500	m5□□	
58	354	1.7	5.8	247	24	354	58	354	1.7	102	356	1.4	25.207	-H600	50-P100/M4	
56	362	2.4	5.6	253	23	362	56	362	2.4	99	364	2.0	25.815	-H850	50-P100/M4	
53	387	3.5	5.3	270	22	387	53	387	3.5	93	389	3.3	27.578	-H1500	50-P100/M4	
53	387	1.2	5.3	270	22	387	53	387	1.2	93	389	1.1	27.578	-H450	50-P100/M4	
51	397	1.5	5.1	277	21	397	51	397	1.5	91	399	1.4	28.310	-H600	50-P100/M4	
51	397	2.1	5.1	278	21	397	51	397	2.1	91	399	2.0	28.315	-H850	50-P100/M4	
49	419	3.5	4.9	292	20	419	49	419	3.5	86	421	3.3	29.822	-H3000	50-P100/M4	
47	438	1.0	4.7	305	19	438	47	438	1.0	82	440	1.0	31.167	-H450	50-P100/M4	
46	440	1.4	4.6	307	19	440	46	440	1.4	82	442	1.3	31.356	-H600	50-P100/M4	
46	444	1.9	4.6	310	19	444	46	444	1.9	81	446	1.8	31.639	-H850	50-P100/M4	
45	453	2.8	4.5	316	19	453	45	453	2.8	79	455	2.6	32.267	-H1500	50-P100/M4	
44	460	3.5	4.4	321	18	460	44	460	3.5	78	462	3.3	32.756	-H3000	50-P100/M4	
41	494	1.2	4.1	345	17	494	41	494	1.2	73	497	1.2	35.214	-H600	50-P100/M4	
41	501	2.8	4.1	350	17	501	41	501	2.8	72	503	2.6	35.689	-H1500	50-P100/M4	
40	508	2.9	4.0	355	17	508	40	508	2.9	71	510	2.8	36.193	-H3000	50-P100/M4	
39	522	1.6	3.9	364	16	522	39	522	1.6	69	525	1.5	37.190	-H850	50-P100/M4	
37	550	2.3	3.7	384	15	550	37	550	2.3	65	552	2.2	39.160	-H1500	50-P100/M4	
37	558	2.9	3.6	390	15	558	37	558	2.9	64	561	2.8	39.753	-H3000	50-P100/M4	
35	583	1.5	3.5	407	14	583	35	583	1.5	62	586	1.5	41.556	-H850	50-P100/M4	
34	608	2.3	3.3	424	14	608	34	608	2.3	59	611	2.3	43.313	-H1500	50-P100/M4	
32	634	1.3	3.2	442	13	634	32	634	1.3	57	637	1.3	45.136	-H850	50-P100/M4	
32	642	2.3	3.2	448	13	642	32	642	2.3	56	645	2.3	45.750	-H3000	50-P100/M4	
29	695	1.8	2.9	485	12	695	29	695	1.8	52	698	1.8	49.500	-H1500	50-P100/M4	
29	705	2.3	2.9	492	12	705	29	705	2.3	51	709	2.3	50.250	-H3000	50-P100/M4	
29	708	1.2	2.9	494	12	708	29	708	1.2	51	711	1.2	50.433	-H850	50-P100/M4	
27	769	1.8	2.6	537	11	769	27	769	1.8	47	772	1.8	54.750	-H1500	50-P100/M4	
23	869	5.8	2.3	478	12	869	23	869	5.8	41	877	5.7	62.478	-H5000	40-P100/M4	

3-stage gearboxes

Mains operation 400 V, 50 Hz			Inverter operation 5 Hz -		- 20 ... 25 Hz		- 50 Hz (1:10)			- 87 Hz (1:17.4)			i	Product		
n_2 [r/min]	M_2 [Nm]	c	n_{22} [r/min]	M_{22} [Nm]	n_{21} [r/min]	M_2 [Nm]	n_2 [r/min]	M_2 [Nm]	c	n_2 [r/min]	M_2 [Nm]	c		g500	m5□□	
49	408	2.1	4.9	285	20	408	49	408	2.1	87	410	1.7	29.536	-H850	50-P100/M4	
47	431	1.4	4.6	301	19	431	47	431	1.4	82	433	1.2	31.197	-H600	50-P100/M4	
44	456	1.9	4.4	319	18	456	44	456	1.9	78	458	1.6	33.003	-H850	50-P100/M4	
41	484	1.2	4.1	338	17	484	41	484	1.2	73	487	1.0	35.037	-H600	50-P100/M4	
38	523	1.6	3.8	365	16	523	38	523	1.6	68	525	1.4	37.799	-H850	50-P100/M4	
36	552	1.1	3.6	385	15	552	36	552	1.1	64	555	0.9	39.925	-H600	50-P100/M4	
35	572	1.5	3.5	399	15	572	35	572	1.5	62	574	1.2	41.350	-H850	50-P100/M4	
33	604	1.0	3.3	422	14	604	33	604	1.0	59	607	0.8	43.676	-H600	50-P100/M4	

Selection tables, 4-pole motors

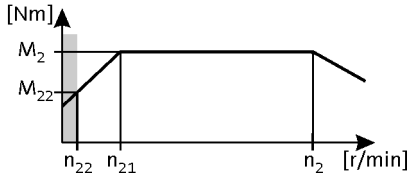

50 Hz: P_N = 2.2 kW
87 Hz: P_N = 3.9 kW

3-stage gearboxes

Mains operation 400 V, 50 Hz			Inverter operation 5 Hz -		- 20 ... 25 Hz		- 50 Hz (1:10)			- 87 Hz (1:17.4)			i	Product		
n_2 [r/min]	M_2 [Nm]	c	n_{22} [r/min]	M_{22} [Nm]	n_{21} [r/min]	M_2 [Nm]	n_2 [r/min]	M_2 [Nm]	c	n_2 [r/min]	M_2 [Nm]	c		g500	m5□□	
31	639	1.3	3.1	446	13	639	31	639	1.3	56	642	1.3	46.204	-H850	50-P100/M4	
30	678	0.9	3.0	474	12	678	30	678	0.9	52	681	0.8	49.051	-H600	50-P100/M4	
29	690	2.2	2.9	481	12	690	29	690	2.2	51	693	2.1	49.867	-H1500	50-P100/M4	
28	729	1.2	2.7	509	11	729	28	729	1.2	49	733	1.1	52.743	-H850	50-P100/M4	
26	772	1.9	2.6	539	11	772	26	772	1.9	46	776	1.8	55.851	-H1500	50-P100/M4	
25	815	1.0	2.5	569	10	815	25	815	1.0	44	819	1.0	58.933	-H850	50-P100/M4	
24	854	1.8	2.3	596	9.7	854	24	854	1.8	42	858	1.7	61.774	-H1500	50-P100/M4	
23	859	5.8	2.3	473	12	859	23	859	5.8	41	866	5.5	62.664	-H5000	40-P100/M4	
23	893	1.0	2.2	624	9.3	893	23	893	1.0	40	898	0.9	64.610	-H850	50-P100/M4	
22	895	3.4	2.2	625	9.3	895	22	895	3.4	40	899	3.2	64.744	-H3000	50-P100/M4	
21	941	5.3	2.1	518	11	941	21	941	5.3	38	949	5.0	68.658	-H5000	40-P100/M4	
20	983	3.1	2.0	686	8.4	983	20	983	3.1	36	988	2.9	71.112	-H3000	50-P100/M4	
20	985	1.5	2.0	688	8.4	985	20	985	1.5	36	990	1.4	71.238	-H1500	50-P100/M4	
20	998	0.9	2.0	697	8.3	1003	20	998	0.9	36	1003	0.8	72.193	-H850	50-P100/M4	
19	1080	4.6	1.8	594	9.3	1080	19	1080	4.6	33	1089	4.4	78.777	-H5000	40-P100/M4	
18	1090	1.4	1.8	761	7.6	1090	18	1090	1.4	33	1095	1.3	78.794	-H1500	50-P100/M4	
17	1207	1.2	1.7	842	6.9	1207	17	1207	1.2	29	1212	1.2	87.267	-H1500	50-P100/M4	
16	1233	4.1	1.6	678	8.2	1233	16	1233	4.1	29	1243	4.0	89.909	-H5000	40-P100/M4	
15	1335	1.1	1.5	932	6.2	1335	15	1335	1.1	27	1341	1.1	96.522	-H1500	50-P100/M4	
15	1340	6.0	1.5	737	7.5	1340	15	1340	6.0	26	1352	5.9	97.753	-H8000	40-P100/M4	
14	1399	3.6	1.4	770	7.2	1399	14	1399	3.6	25	1411	3.5	102.053	-H5000	40-P100/M4	
14	1487	2.0	1.3	1038	5.6	1487	14	1487	2.0	24	1494	2.0	107.541	-H3000	50-P100/M4	
13	1512	5.3	1.3	831	6.7	1512	13	1512	5.3	23	1525	5.3	110.259	-H8000	40-P100/M4	
13	1571	1.0	1.3	1096	5.3	1571	13	1571	1.0	23	1578	1.0	113.585	-H1500	50-P100/M4	
13	1568	3.2	1.3	862	6.4	1568	13	1568	3.2	23	1581	3.2	114.361	-H5000	40-P100/M4	
12	1633	1.8	1.2	1140	5.1	1633	12	1633	1.8	22	1641	1.8	118.119	-H3000	50-P100/M4	
12	1687	4.7	1.2	928	6.0	1687	12	1687	4.7	21	1701	4.7	123.043	-H8000	40-P100/M4	
12	1737	0.9	1.2	1213	4.8	1737	12	1737	0.9	20	1745	0.9	125.632	-H1500	50-P100/M4	
11	1806	1.7	1.1	1260	4.6	1806	11	1806	1.7	20	1814	1.7	130.585	-H3000	50-P100/M4	
11	1794	2.8	1.1	987	5.6	1794	11	1794	2.8	20	1809	2.8	130.842	-H5000	40-P100/M4	
11	1895	4.2	1.0	1043	5.3	1895	11	1895	4.2	19	1912	4.2	138.255	-H8000	40-P100/M4	
10	1983	1.5	1.0	1384	4.2	1983	10	1983	1.5	18	1993	1.5	143.430	-H3000	50-P100/M4	
10	1995	2.5	1.0	1097	5.1	1995	10	1995	2.5	18	2012	2.5	145.489	-H5000	40-P100/M4	
9.4	2140	3.7	0.9	1177	4.7	2140	9.4	2140	3.7	17	2159	3.7	156.114	-H8000	40-P100/M4	
8.7	2298	2.2	0.9	1264	4.4	2298	8.7	2298	2.2	15	2318	2.2	167.626	-H5000	40-P100/M4	

Selection tables, 4-pole motors

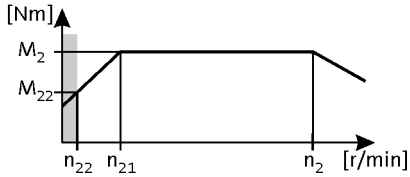

50 Hz: P_N = 2.2 kW
87 Hz: P_N = 3.9 kW

3-stage gearboxes

Mains operation 400 V, 50 Hz			Inverter operation 5 Hz -		- 20 ... 25 Hz		- 50 Hz (1:10)			- 87 Hz (1:17.4)			i	Product		
n_2 [r/min]	M_2 [Nm]	c	n_{22} [r/min]	M_{22} [Nm]	n_{21} [r/min]	M_2 [Nm]	n_2 [r/min]	M_2 [Nm]	c	n_2 [r/min]	M_2 [Nm]	c		g500	m5□□	
8.6	2337	1.3	0.9	1631	3.6	2337	8.6	2337	1.3	15	2348	1.3	168.993	-H3000	50-P100/M4	
8.3	2415	3.3	0.8	1329	4.2	2415	8.3	2415	3.3	15	2436	3.3	176.175	-H8000	40-P100/M4	
7.8	2567	1.2	0.8	1792	3.2	2567	7.8	2567	1.2	14	2579	1.2	185.615	-H3000	50-P100/M4	
7.9	2554	2.0	0.8	1405	3.9	2554	7.9	2554	2.0	14	2576	1.9	186.282	-H5000	40-P100/M4	
7.5	2677	3.0	0.7	1472	3.8	2677	7.5	2677	3.0	13	2700	3.0	195.242	-H8000	40-P100/M4	
7.1	2836	1.1	0.7	1980	2.9	2836	7.1	2836	1.1	13	2849	1.1	205.096	-H3000	50-P100/M4	
7.0	2861	1.8	0.7	1574	3.5	2861	7.0	2861	1.8	12	2885	1.7	208.671	-H5000	40-P100/M4	
6.7	3013	2.7	0.7	1657	3.3	3013	6.7	3013	2.7	12	3039	2.6	219.799	-H8000	40-P100/M4	
6.4	3115	1.0	0.6	2174	2.7	3115	6.4	3115	1.0	11	3129	1.0	225.269	-H3000	50-P100/M4	
6.2	3236	1.6	0.6	1780	3.1	3236	6.2	3236	1.6	11	3264	1.5	236.034	-H5000	40-P100/M4	
5.9	3399	2.4	0.6	1870	3.0	3399	5.9	3399	2.4	10	3428	2.3	247.950	-H8000	40-P100/M4	
5.8	3487	1.4	0.6	1918	2.9	3487	5.8	3487	1.4	10	3517	1.4	254.341	-H5000	40-P100/M4	
5.6	3585	0.8	0.6	2502	2.3	3585	5.6	3585	0.8	9.9	3602	0.8	259.250	-H3000	50-P100/M4	
5.5	3626	2.2	0.5	1995	2.8	3626	5.5	3626	2.2	9.7	3657	2.2	264.509	-H8000	40-P100/M4	
5.4	3705	1.4	0.5	2038	2.7	3705	5.4	3705	1.4	9.5	3736	1.3	270.238	-H5000	40-P100/M4	
5.2	3853	2.1	0.5	2119	2.6	3853	5.2	3853	2.1	9.2	3886	2.1	281.041	-H8000	40-P100/M4	
4.6	4344	1.2	0.5	2390	2.3	4344	4.6	4344	1.2	8.1	4382	1.1	316.900	-H5000	40-P100/M4	
4.5	4502	1.8	0.4	2476	2.2	4502	4.5	4502	1.8	7.8	4540	1.8	328.381	-H8000	40-P100/M4	
4.3	4718	1.1	0.4	2595	2.1	4718	4.3	4718	1.1	7.5	4759	1.1	344.169	-H5000	40-P100/M4	
3.9	5111	1.0	0.4	2812	2.0	5111	3.9	5111	1.0	6.9	5155	1.0	372.850	-H5000	40-P100/M4	

Selection tables, 4-pole motors

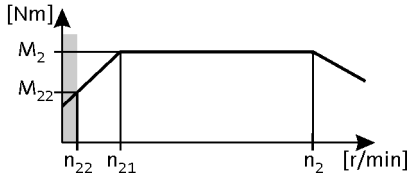

50 Hz: P_N = 3.0 kW
87 Hz: P_N = 5.2 kW

2-stage gearboxes

Mains operation 400 V, 50 Hz			Inverter operation 5 Hz -		- 20 ... 25 Hz		- 50 Hz (1:10)			- 87 Hz (1:17.4)			i	Product		
n_2 [r/min]	M_2 [Nm]	c	n_{22} [r/min]	M_{22} [Nm]	n_{21} [r/min]	M_2 [Nm]	n_2 [r/min]	M_2 [Nm]	c	n_2 [r/min]	M_2 [Nm]	c		g500	m5□□	
444	63	3.8	44	44	184	63	444	63	3.8				3.267	-H600	50-P100/L4	
428	65	1.9	43	45	177	65	428	65	1.9				3.389	-H210	50-P100/L4	
428	65	2.5	43	45	177	65	428	65	2.5				3.389	-H320	50-P100/L4	
421	66	3.9	42	46	174	66	421	66	3.9				3.444	-H450	50-P100/L4	
323	86	3.5	32	60	134	84	323	86	3.5	571	84	2.9	4.480	-H600	50-P100/L4	
312	89	1.6	31	62	129	89	312	89	1.6				4.648	-H210	50-P100/L4	
312	89	2.1	31	62	129	87	312	89	2.1	551	87	1.8	4.648	-H320	50-P100/L4	
307	91	3.2	31	63	127	89	307	91	3.2	542	89	2.8	4.724	-H450	50-P100/L4	
270	103	4.2	27	72	112	101	270	103	4.2	477	101	3.6	5.368	-H850	50-P100/L4	
260	107	1.5	26	75	108	107	260	107	1.5				5.583	-H210	50-P100/L4	
255	109	2.9	26	76	106	109	255	109	2.9				5.678	-H450	50-P100/L4	
253	110	3.1	25	77	105	108	253	110	3.1	446	108	2.6	5.733	-H600	50-P100/L4	
240	116	2.8	24	81	99	114	240	116	2.8	423	114	2.4	6.045	-H450	50-P100/L4	
238	117	2.0	24	82	99	117	238	117	2.0				6.083	-H320	50-P100/L4	
232	120	1.3	23	84	96	120	232	120	1.3				6.250	-H210	50-P100/L4	
225	124	3.3	23	86	93	124	225	124	3.3				6.456	-H600	50-P100/L4	
219	127	2.6	22	89	91	125	219	127	2.6	387	125	2.3	6.613	-H450	50-P100/L4	
210	133	1.6	21	93	87	133	210	133	1.6				6.910	-H320	50-P100/L4	
200	139	3.1	20	97	83	139	200	139	3.1				7.250	-H600	50-P100/L4	
189	147	1.2	19	103	78	147	189	147	1.2				7.657	-H210	50-P100/L4	
186	149	2.4	19	104	77	149	186	149	2.4				7.787	-H450	50-P100/L4	
174	160	1.6	17	112	72	160	174	160	1.6				8.343	-H320	50-P100/L4	
169	164	1.0	17	115	70	164	169	164	1.0				8.571	-H210	50-P100/L4	
165	169	2.2	17	118	68	169	165	169	2.2				8.800	-H450	50-P100/L4	
164	170	2.9	16	119	68	170	164	170	2.9				8.853	-H600	50-P100/L4	
153	182	1.3	15	127	63	182	153	182	1.3				9.477	-H320	50-P100/L4	
148	188	1.0	15	131	61	188	148	188	1.0				9.799	-H210	50-P100/L4	
146	191	2.7	15	133	60	191	146	191	2.7				9.943	-H600	50-P100/L4	
145	191	2.0	15	133	60	188	145	191	2.0	257	188	1.7	9.965	-H450	50-P100/L4	
143	195	3.4	14	136	59	195	143	195	3.4				10.143	-H850	50-P100/L4	
136	205	1.3	14	143	56	205	136	205	1.3				10.677	-H320	50-P100/L4	
135	206	0.9	14	144	56	206	135	206	0.9				10.720	-H210	50-P100/L4	
129	216	1.9	13	151	53	216	129	216	1.9				11.262	-H450	50-P100/L4	
128	217	2.5	13	152	53	213	128	217	2.5	226	213	2.1	11.330	-H600	50-P100/L4	
128	218	3.2	13	152	53	214	128	218	3.2	225	214	2.7	11.360	-H850	50-P100/L4	

Selection tables, 4-pole motors

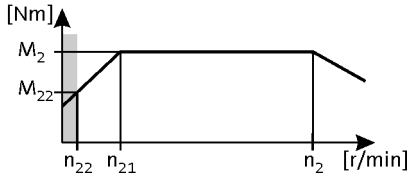

50 Hz: P_N = 3.0 kW
87 Hz: P_N = 5.2 kW

2-stage gearboxes

Mains operation 400 V, 50 Hz			Inverter operation 5 Hz -		- 20 ... 25 Hz		- 50 Hz (1:10)			- 87 Hz (1:17.4)			i	Product		
n_2 [r/min]	M_2 [Nm]	c	n_{22} [r/min]	M_{22} [Nm]	n_{21} [r/min]	M_2 [Nm]	n_2 [r/min]	M_2 [Nm]	c	n_2 [r/min]	M_2 [Nm]	c		g500	m5□□	
124	224	1.2	12	156	51	224	124	224	1.2				11.680	-H320	50-P100/L4	
121	230	0.8	12	161	50	230	121	230	0.8				12.000	-H210	50-P100/L4	
120	233	1.1	12	162	50	233	120	233	1.1				12.128	-H320	50-P100/L4	
118	236	1.7	12	165	49	236	118	236	1.7				12.320	-H450	50-P100/L4	
117	237	4.2	12	166	49	233	117	237	4.2	207	233	3.6	12.362	-H1500	50-P100/L4	
117	238	2.3	12	166	48	233	117	238	2.3	207	233	2.0	12.395	-H600	50-P100/L4	
114	243	3.0	11	170	47	239	114	243	3.0	202	239	2.5	12.693	-H850	50-P100/L4	
109	255	1.0	11	178	45	255	109	255	1.0				13.268	-H320	50-P100/L4	
106	262	4.2	11	183	44	257	106	262	4.2	187	257	3.6	13.673	-H1500	50-P100/L4	
104	267	1.6	10	186	43	262	104	267	1.6	184	262	1.4	13.905	-H450	50-P100/L4	
104	267	2.2	10	186	43	262	104	267	2.2	184	262	1.9	13.920	-H600	50-P100/L4	
100	278	2.7	10	194	41	273	100	278	2.7	177	273	2.3	14.490	-H850	50-P100/L4	
97	286	1.0	9.7	200	40	280	97	286	1.0	172	280	0.9	14.898	-H320	50-P100/L4	
92	301	1.5	9.2	210	38	296	92	301	1.5	163	296	1.3	15.714	-H450	50-P100/L4	
92	303	2.0	9.2	212	38	298	92	303	2.0	162	298	1.7	15.810	-H600	50-P100/L4	
90	311	2.6	9.0	217	37	305	90	311	2.6	158	305	2.2	16.190	-H850	50-P100/L4	
86	325	0.9	8.6	227	36	325	86	325	0.9				16.923	-H320	50-P100/L4	
85	327	1.4	8.5	228	35	321	85	327	1.4	150	321	1.2	17.033	-H450	50-P100/L4	
82	340	2.4	8.2	238	34	334	82	340	2.4	144	334	2.0	17.750	-H850	50-P100/L4	
82	341	1.8	8.2	238	34	334	82	341	1.8	144	334	1.5	17.755	-H600	50-P100/L4	
79	350	0.9	7.9	244	33	350	79	350	0.9				18.250	-H320	50-P100/L4	
75	369	1.2	7.5	258	31	362	75	369	1.2	133	362	1.0	19.250	-H450	50-P100/L4	
75	371	1.6	7.5	259	31	365	75	371	1.6	132	365	1.4	19.367	-H600	50-P100/L4	
73	380	2.2	7.3	266	30	373	73	380	2.2	129	373	1.9	19.833	-H850	50-P100/L4	
71	394	3.0	7.1	275	29	387	71	394	3.0	125	387	2.6	20.533	-H1500	50-P100/L4	
67	417	1.4	6.7	291	28	409	67	417	1.4	118	409	1.2	21.750	-H600	50-P100/L4	
65	425	1.1	6.5	297	27	417	65	425	1.1	115	417	0.9	22.170	-H450	50-P100/L4	
64	436	3.0	6.4	304	26	428	64	436	3.0	113	428	2.6	22.711	-H1500	50-P100/L4	
63	443	1.9	6.3	309	26	435	63	443	1.9	111	435	1.6	23.103	-H850	50-P100/L4	
58	478	2.6	5.8	334	24	469	58	478	2.6	103	469	2.2	24.933	-H1500	50-P100/L4	
58	481	0.9	5.8	336	24	481	58	481	0.9				25.056	-H450	50-P100/L4	
58	484	1.2	5.8	338	24	475	58	484	1.2	102	475	1.1	25.207	-H600	50-P100/L4	
56	495	1.7	5.6	346	23	486	56	495	1.7	99	486	1.5	25.815	-H850	50-P100/L4	
53	529	2.6	5.3	369	22	519	53	529	2.6	93	519	2.5	27.578	-H1500	50-P100/L4	
53	529	0.9	5.3	369	22	519	53	529	0.9	93	519	0.8	27.578	-H450	50-P100/L4	

Selection tables, 4-pole motors

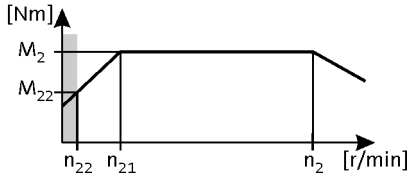

50 Hz: P_N = 3.0 kW
87 Hz: P_N = 5.2 kW

2-stage gearboxes

Mains operation 400 V, 50 Hz			Inverter operation 5 Hz -		- 20 ... 25 Hz		- 50 Hz (1:10)			- 87 Hz (1:17.4)			i	Product		
n_2 [r/min]	M_2 [Nm]	c	n_{22} [r/min]	M_{22} [Nm]	n_{21} [r/min]	M_2 [Nm]	n_2 [r/min]	M_2 [Nm]	c	n_2 [r/min]	M_2 [Nm]	c		g500	m5□□	
51	543	1.1	5.1	379	21	533	51	543	1.1	90	533	1.1	28.310	-H600	50-P100/L4	
51	543	1.6	5.1	379	21	533	51	543	1.6	90	533	1.5	28.315	-H850	50-P100/L4	
49	572	2.5	4.9	399	20	561	49	572	2.5	86	561	2.5	29.822	-H3000	50-P100/L4	
46	601	1.0	4.6	420	19	590	46	601	1.0	82	590	1.0	31.356	-H600	50-P100/L4	
46	607	1.4	4.6	424	19	596	46	607	1.4	81	596	1.4	31.639	-H850	50-P100/L4	
45	619	2.0	4.5	432	19	607	45	619	2.0	79	607	2.0	32.267	-H1500	50-P100/L4	
44	628	2.5	4.4	439	18	617	44	628	2.5	78	617	2.5	32.756	-H3000	50-P100/L4	
41	675	0.9	4.1	472	17	663	41	675	0.9	73	663	0.9	35.214	-H600	50-P100/L4	
41	685	2.0	4.1	478	17	672	41	685	2.0	72	672	2.0	35.689	-H1500	50-P100/L4	
40	694	2.1	4.0	485	17	681	40	694	2.1	71	681	2.1	36.193	-H3000	50-P100/L4	
39	713	1.2	3.9	498	16	700	39	713	1.2	69	700	1.2	37.190	-H850	50-P100/L4	
37	751	1.7	3.7	524	15	737	37	751	1.7	65	737	1.7	39.160	-H1500	50-P100/L4	
36	763	2.1	3.6	532	15	748	36	763	2.1	64	748	2.1	39.753	-H3000	50-P100/L4	
35	797	1.1	3.5	556	14	782	35	797	1.1	62	782	1.1	41.556	-H850	50-P100/L4	
34	831	1.7	3.3	580	14	815	34	831	1.7	59	815	1.7	43.313	-H1500	50-P100/L4	
32	866	1.0	3.2	604	13	850	32	866	1.0	57	850	1.0	45.136	-H850	50-P100/L4	
32	878	1.7	3.2	613	13	861	32	878	1.7	56	861	1.7	45.750	-H3000	50-P100/L4	
31	898	5.6	3.1	494	16	884	31	898	5.6	55	884	5.7	47.175	-H5000	40-P100/L4	
29	950	1.3	2.9	663	12	932	29	950	1.3	52	932	1.3	49.500	-H1500	50-P100/L4	
29	964	1.7	2.9	673	12	946	29	964	1.7	51	946	1.7	50.250	-H3000	50-P100/L4	
29	958	5.2	2.9	527	15	943	29	958	5.2	51	943	5.3	50.326	-H5000	40-P100/L4	
29	967	0.9	2.9	675	12	949	29	967	0.9	51	949	0.9	50.433	-H850	50-P100/L4	
27	1018	4.9	2.7	560	14	1002	27	1018	4.9	48	1002	5.0	53.471	-H5000	40-P100/L4	
27	1050	1.3	2.6	733	11	1031	27	1050	1.3	47	1031	1.3	54.750	-H1500	50-P100/L4	
23	1189	4.2	2.3	654	12	1171	23	1189	4.2	41	1171	4.3	62.478	-H5000	40-P100/L4	

3-stage gearboxes

Mains operation 400 V, 50 Hz			Inverter operation 5 Hz -		- 20 ... 25 Hz		- 50 Hz (1:10)			- 87 Hz (1:17.4)			i	Product		
n_2 [r/min]	M_2 [Nm]	c	n_{22} [r/min]	M_{22} [Nm]	n_{21} [r/min]	M_2 [Nm]	n_2 [r/min]	M_2 [Nm]	c	n_2 [r/min]	M_2 [Nm]	c		g500	m5□□	
49	558	1.5	4.9	390	20	558	49	558	1.5				29.536	-H850	50-P100/L4	
46	589	1.0	4.6	411	19	589	46	589	1.0				31.197	-H600	50-P100/L4	
44	624	1.4	4.4	435	18	624	44	624	1.4				33.003	-H850	50-P100/L4	
41	662	0.9	4.1	462	17	662	41	662	0.9				35.037	-H600	50-P100/L4	
38	714	1.2	3.8	499	16	701	38	714	1.2	68	701	1.0	37.799	-H850	50-P100/L4	
35	781	1.1	3.5	545	15	781	35	781	1.1				41.350	-H850	50-P100/L4	
31	873	1.0	3.1	609	13	873	31	873	1.0				46.204	-H850	50-P100/L4	
29	942	1.6	2.9	658	12	925	29	942	1.6	51	925	1.5	49.867	-H1500	50-P100/L4	
28	997	0.9	2.7	696	11	978	28	997	0.9	49	978	0.8	52.743	-H850	50-P100/L4	
26	1055	1.4	2.6	737	11	1036	26	1055	1.4	46	1036	1.4	55.851	-H1500	50-P100/L4	

Selection tables, 4-pole motors

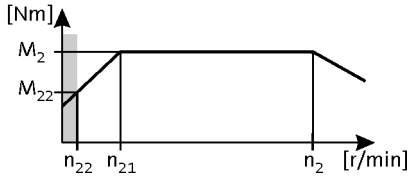

50 Hz: P_N = 3.0 kW
87 Hz: P_N = 5.2 kW

3-stage gearboxes

Mains operation 400 V, 50 Hz			Inverter operation 5 Hz -		- 20 ... 25 Hz		- 50 Hz (1:10)			- 87 Hz (1:17.4)			i	Product		
n_2 [r/min]	M_2 [Nm]	c	n_{22} [r/min]	M_{22} [Nm]	n_{21} [r/min]	M_2 [Nm]	n_2 [r/min]	M_2 [Nm]	c	n_2 [r/min]	M_2 [Nm]	c		g500	m5□□	
24	1167	1.3	2.3	815	9.7	1167	24	1167	1.3				61.774	-H1500	50-P100/L4	
23	1175	4.3	2.3	647	12	1157	23	1175	4.3	41	1157	4.1	62.664	-H5000	40-P100/L4	
22	1223	2.5	2.2	854	9.3	1201	22	1223	2.5	40	1201	2.4	64.744	-H3000	50-P100/L4	
21	1288	3.9	2.1	708	11	1268	21	1288	3.9	37	1268	3.7	68.658	-H5000	40-P100/L4	
20	1344	2.2	2.0	938	8.4	1319	20	1344	2.2	36	1319	2.2	71.112	-H3000	50-P100/L4	
20	1346	1.1	2.0	940	8.4	1321	20	1346	1.1	36	1321	1.1	71.238	-H1500	50-P100/L4	
19	1423	5.6	1.9	783	9.6	1401	19	1423	5.6	34	1401	5.4	75.868	-H8000	40-P100/L4	
19	1478	3.4	1.8	813	9.3	1455	19	1478	3.4	33	1455	3.3	78.777	-H5000	40-P100/L4	
18	1489	1.0	1.8	1039	7.6	1489	18	1489	1.0				78.794	-H1500	50-P100/L4	
17	1619	4.9	1.7	890	8.5	1594	17	1619	4.9	30	1594	5.0	86.290	-H8000	40-P100/L4	
17	1649	0.9	1.7	1151	6.9	1618	17	1649	0.9	29	1618	0.9	87.267	-H1500	50-P100/L4	
16	1687	3.0	1.6	928	8.1	1661	16	1687	3.0	29	1661	3.0	89.909	-H5000	40-P100/L4	
15	1824	0.8	1.5	1273	6.2	1824	15	1824	0.8				96.522	-H1500	50-P100/L4	
15	1834	4.4	1.5	1009	7.5	1806	15	1834	4.4	26	1806	4.4	97.753	-H8000	40-P100/L4	
14	1914	2.6	1.4	1053	7.2	1885	14	1914	2.6	25	1885	2.7	102.053	-H5000	40-P100/L4	
14	2032	1.5	1.3	1418	5.6	1994	14	2032	1.5	24	1994	1.5	107.541	-H3000	50-P100/L4	
13	2068	3.9	1.3	1138	6.6	2037	13	2068	3.9	23	2037	3.9	110.259	-H8000	40-P100/L4	
13	2145	2.3	1.3	1180	6.4	2112	13	2145	2.3	23	2112	2.4	114.361	-H5000	40-P100/L4	
12	2232	1.3	1.2	1558	5.1	2190	12	2232	1.3	22	2190	1.4	118.119	-H3000	50-P100/L4	
12	2308	3.5	1.2	1270	5.9	2273	12	2308	3.5	21	2273	3.5	123.043	-H8000	40-P100/L4	
11	2467	1.2	1.1	1722	4.6	2422	11	2467	1.2	20	2422	1.2	130.585	-H3000	50-P100/L4	
11	2454	2.0	1.1	1350	5.6	2417	11	2454	2.0	20	2417	2.1	130.842	-H5000	40-P100/L4	
11	2593	3.1	1.0	1427	5.3	2554	11	2593	3.1	19	2554	3.1	138.255	-H8000	40-P100/L4	
10	2710	1.1	1.0	1892	4.2	2660	10	2710	1.1	18	2660	1.1	143.430	-H3000	50-P100/L4	
10	2729	1.8	1.0	1501	5.0	2687	10	2729	1.8	18	2687	1.9	145.489	-H5000	40-P100/L4	
9.4	2928	2.7	0.9	1611	4.7	2884	9.4	2928	2.7	17	2884	2.8	156.114	-H8000	40-P100/L4	
8.7	3144	1.6	0.9	1730	4.4	3096	8.7	3144	1.6	15	3096	1.6	167.626	-H5000	40-P100/L4	
8.6	3193	0.9	0.9	2229	3.6	3134	8.6	3193	0.9	15	3134	1.0	168.993	-H3000	50-P100/L4	
8.3	3305	2.4	0.8	1818	4.1	3254	8.3	3305	2.4	15	3254	2.5	176.175	-H8000	40-P100/L4	
7.8	3507	0.9	0.8	2448	3.2	3442	7.8	3507	0.9	14	3442	0.9	185.615	-H3000	50-P100/L4	
7.8	3494	1.4	0.8	1922	3.9	3441	7.8	3494	1.4	14	3441	1.5	186.282	-H5000	40-P100/L4	
7.5	3662	2.2	0.7	2015	3.7	3606	7.5	3662	2.2	13	3606	2.2	195.242	-H8000	40-P100/L4	
7.0	3914	1.3	0.7	2153	3.5	3854	7.0	3914	1.3	12	3854	1.3	208.671	-H5000	40-P100/L4	
6.6	4123	1.9	0.7	2268	3.3	4060	6.6	4123	1.9	12	4060	2.0	219.799	-H8000	40-P100/L4	
6.2	4428	1.1	0.6	2435	3.1	4360	6.2	4428	1.1	11	4360	1.2	236.034	-H5000	40-P100/L4	

Selection tables, 4-pole motors

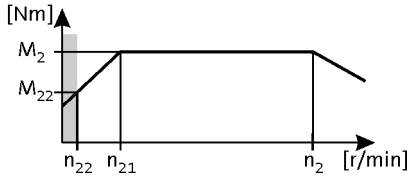

50 Hz: P_N = 3.0 kW
87 Hz: P_N = 5.2 kW

3-stage gearboxes

Mains operation 400 V, 50 Hz			Inverter operation 5 Hz -		- 20 ... 25 Hz		- 50 Hz (1:10)			- 87 Hz (1:17.4)			i	Product		
n_2 [r/min]	M_2 [Nm]	c	n_{22} [r/min]	M_{22} [Nm]	n_{21} [r/min]	M_2 [Nm]	n_2 [r/min]	M_2 [Nm]	c	n_2 [r/min]	M_2 [Nm]	c		g500	m5□□	
5.9	4651	1.7	0.6	2558	2.9	4580	5.9	4651	1.7	10	4580	1.8	247.950	-H8000	40-P100/L4	
5.7	4771	1.1	0.6	2624	2.9	4698	5.7	4771	1.1	10	4698	1.1	254.341	-H5000	40-P100/L4	
5.5	4962	1.6	0.5	2729	2.8	4886	5.5	4962	1.6	9.7	4886	1.6	264.509	-H8000	40-P100/L4	
5.4	5069	1.0	0.5	2788	2.7	4992	5.4	5069	1.0	9.5	4992	1.0	270.238	-H5000	40-P100/L4	
5.2	5272	1.5	0.5	2900	2.6	5191	5.2	5272	1.5	9.1	5191	1.5	281.041	-H8000	40-P100/L4	
4.6	5945	0.8	0.5	3270	2.3	5854	4.6	5945	0.8	8.1	5854	0.9	316.900	-H5000	40-P100/L4	
4.4	6160	1.3	0.4	3388	2.2	6066	4.4	6160	1.3	7.8	6066	1.3	328.381	-H8000	40-P100/L4	

Selection tables, 4-pole motors

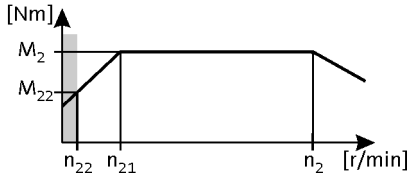

50 Hz: P_N = 4.0 kW
87 Hz: P_N = 7.35 kW

2-stage gearboxes

Mains operation 400 V, 50 Hz			Inverter operation 5 Hz -		- 20 ... 25 Hz		- 50 Hz (1:10)			- 87 Hz (1:17.4)			i	Product		
n_2 [r/min]	M_2 [Nm]	c	n_{22} [r/min]	M_{22} [Nm]	n_{21} [r/min]	M_2 [Nm]	n_2 [r/min]	M_2 [Nm]	c	n_2 [r/min]	M_2 [Nm]	c		g500	m5□□	
462	80	3.8	46	50	191	80	462	80	3.8				3.147	-H850	50-P112/M4	
445	83	2.9	44	52	184	83	445	83	2.9				3.267	-H600	50-P112/M4	
429	86	1.9	43	54	177	86	429	86	1.9				3.389	-H320	50-P112/M4	
422	88	2.9	42	55	174	88	422	88	2.9				3.444	-H450	50-P112/M4	
333	111	3.4	33	69	138	111	333	111	3.4				4.362	-H850	50-P112/M4	
324	114	2.6	32	71	134	114	324	114	2.6				4.480	-H600	50-P112/M4	
313	119	1.6	31	74	129	119	313	119	1.6				4.648	-H320	50-P112/M4	
308	120	2.4	31	75	127	120	308	120	2.4				4.724	-H450	50-P112/M4	
271	137	3.1	27	85	112	137	271	137	3.1				5.368	-H850	50-P112/M4	
256	145	2.2	26	90	106	145	256	145	2.2				5.678	-H450	50-P112/M4	
253	146	2.3	25	91	105	146	253	146	2.3	447	152	1.9	5.733	-H600	50-P112/M4	
244	152	3.6	24	95	101	152	244	152	3.6				5.946	-H850	50-P112/M4	
240	154	2.1	24	96	99	154	240	154	2.1	424	160	1.7	6.045	-H450	50-P112/M4	
239	155	1.5	24	97	99	155	239	155	1.5				6.083	-H320	50-P112/M4	
233	159	4.8	23	99	96	159	233	159	4.8				6.245	-H1500	50-P112/M4	
225	165	2.5	23	103	93	165	225	165	2.5				6.456	-H600	50-P112/M4	
220	169	2.0	22	105	91	169	220	169	2.0	388	176	1.6	6.613	-H450	50-P112/M4	
219	169	3.4	22	106	90	169	219	169	3.4				6.644	-H850	50-P112/M4	
210	176	1.2	21	110	87	176	210	176	1.2				6.910	-H320	50-P112/M4	
200	185	2.4	20	115	83	185	200	185	2.4				7.250	-H600	50-P112/M4	
187	199	1.8	19	124	77	199	187	199	1.8				7.787	-H450	50-P112/M4	
176	210	2.9	18	131	73	210	176	210	2.9				8.241	-H850	50-P112/M4	
174	213	1.2	17	133	72	213	174	213	1.2				8.343	-H320	50-P112/M4	
165	224	1.7	17	140	68	224	165	224	1.7				8.800	-H450	50-P112/M4	
164	226	2.2	16	141	68	226	164	226	2.2				8.853	-H600	50-P112/M4	
161	230	4.8	16	143	67	230	161	230	4.8				9.010	-H1500	50-P112/M4	
158	235	2.8	16	147	65	235	158	235	2.8				9.208	-H850	50-P112/M4	
153	242	1.0	15	151	63	242	153	242	1.0				9.477	-H320	50-P112/M4	
146	254	2.0	15	158	60	254	146	254	2.0				9.943	-H600	50-P112/M4	
146	254	1.5	15	159	60	254	146	254	1.5				9.965	-H450	50-P112/M4	
143	259	2.6	14	161	59	259	143	259	2.6				10.143	-H850	50-P112/M4	
142	262	4.4	14	163	58	262	142	262	4.4				10.267	-H1500	50-P112/M4	
136	272	1.0	14	170	56	272	136	272	1.0				10.677	-H320	50-P112/M4	
129	287	1.4	13	179	53	287	129	287	1.4				11.262	-H450	50-P112/M4	
128	289	1.9	13	180	53	289	128	289	1.9				11.330	-H600	50-P112/M4	

Selection tables, 4-pole motors

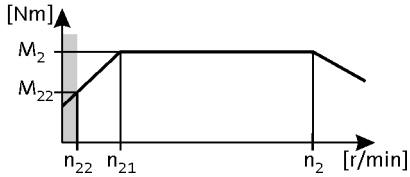

50 Hz: P_N = 4.0 kW
87 Hz: P_N = 7.35 kW

2-stage gearboxes

Mains operation 400 V, 50 Hz			Inverter operation 5 Hz -		- 20 ... 25 Hz		- 50 Hz (1:10)			- 87 Hz (1:17.4)			i	Product		
n_2 [r/min]	M_2 [Nm]	c	n_{22} [r/min]	M_{22} [Nm]	n_{21} [r/min]	M_2 [Nm]	n_2 [r/min]	M_2 [Nm]	c	n_2 [r/min]	M_2 [Nm]	c		g500	m5□□	
128	290	4.4	13	181	53	290	128	290	4.4				11.356	-H1500	50-P112/M4	
128	290	2.4	13	181	53	290	128	290	2.4				11.360	-H850	50-P112/M4	
125	296	4.7	13	185	52	296	125	296	4.7				11.619	-H3000	50-P112/M4	
124	298	0.9	12	186	51	298	124	298	0.9				11.680	-H320	50-P112/M4	
120	309	0.8	12	193	50	309	120	309	0.8				12.128	-H320	50-P112/M4	
118	314	1.3	12	196	49	314	118	314	1.3				12.320	-H450	50-P112/M4	
118	315	3.8	12	197	49	315	118	315	3.8				12.362	-H1500	50-P112/M4	
117	316	1.8	12	197	48	316	117	316	1.8				12.395	-H600	50-P112/M4	
115	324	2.2	11	202	47	324	115	324	2.2				12.693	-H850	50-P112/M4	
114	326	4.7	11	203	47	326	114	326	4.7				12.762	-H3000	50-P112/M4	
106	349	3.8	11	218	44	349	106	349	3.8				13.673	-H1500	50-P112/M4	
105	355	1.2	10	221	43	355	105	355	1.2				13.905	-H450	50-P112/M4	
104	355	1.6	10	222	43	355	104	355	1.6				13.920	-H600	50-P112/M4	
100	370	2.1	10	231	41	370	100	370	2.1	177	385	1.7	14.490	-H850	50-P112/M4	
96	387	3.3	9.6	241	40	387	96	387	3.3	169	402	2.6	15.156	-H1500	50-P112/M4	
93	401	1.1	9.2	250	38	401	93	401	1.1				15.714	-H450	50-P112/M4	
92	403	1.5	9.2	252	38	403	92	403	1.5	162	420	1.2	15.810	-H600	50-P112/M4	
90	413	1.9	9.0	258	37	413	90	413	1.9				16.190	-H850	50-P112/M4	
87	428	3.3	8.7	267	36	428	87	428	3.3	153	445	2.6	16.763	-H1500	50-P112/M4	
85	434	1.0	8.5	271	35	434	85	434	1.0				17.033	-H450	50-P112/M4	
82	453	1.8	8.2	282	34	453	82	453	1.8	145	471	1.4	17.750	-H850	50-P112/M4	
82	453	1.3	8.2	283	34	453	82	453	1.3				17.755	-H600	50-P112/M4	
78	478	3.3	7.7	298	32	478	78	478	3.3	137	498	2.6	18.752	-H3000	50-P112/M4	
76	491	0.9	7.5	306	31	491	76	491	0.9				19.250	-H450	50-P112/M4	
75	494	1.2	7.5	308	31	494	75	494	1.2	132	514	1.0	19.367	-H600	50-P112/M4	
73	506	1.7	7.3	316	30	506	73	506	1.7	129	527	1.3	19.833	-H850	50-P112/M4	
71	524	2.6	7.1	327	29	524	71	524	2.6	125	545	2.1	20.533	-H1500	50-P112/M4	
71	525	3.3	7.0	328	29	525	71	525	3.3	125	547	2.6	20.596	-H3000	50-P112/M4	
67	555	1.1	6.7	346	28	555	67	555	1.1				21.750	-H600	50-P112/M4	
64	579	2.6	6.4	361	26	579	64	579	2.6	113	603	2.1	22.711	-H1500	50-P112/M4	
63	588	2.7	6.3	367	26	588	63	588	2.7	111	612	2.2	23.044	-H3000	50-P112/M4	
63	589	1.4	6.3	368	26	589	63	589	1.4	111	613	1.2	23.103	-H850	50-P112/M4	
58	636	2.2	5.8	397	24	636	58	636	2.2	103	662	1.8	24.933	-H1500	50-P112/M4	
58	643	0.9	5.8	401	24	643	58	643	0.9				25.207	-H600	50-P112/M4	
57	646	2.7	5.7	403	24	646	57	646	2.7	101	672	2.2	25.311	-H3000	50-P112/M4	

Selection tables, 4-pole motors

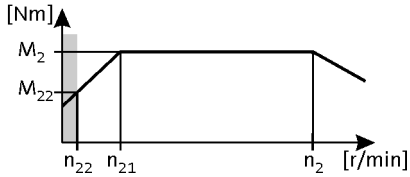

50 Hz: P_N = 4.0 kW
87 Hz: P_N = 7.35 kW

2-stage gearboxes

Mains operation 400 V, 50 Hz			Inverter operation 5 Hz -		- 20 ... 25 Hz		- 50 Hz (1:10)			- 87 Hz (1:17.4)			i	Product		
n_2 [r/min]	M_2 [Nm]	c	n_{22} [r/min]	M_{22} [Nm]	n_{21} [r/min]	M_2 [Nm]	n_2 [r/min]	M_2 [Nm]	c	n_2 [r/min]	M_2 [Nm]	c		g500	m5□□	
56	658	1.3	5.6	411	23	658	56	658	1.3	99	685	1.0	25.815	-H850	50-P112/M4	
53	703	2.1	5.3	439	22	703	53	703	2.1	93	732	2.0	27.578	-H1500	50-P112/M4	
51	722	0.8	5.1	451	21	722	51	722	0.8				28.310	-H600	50-P112/M4	
51	722	1.2	5.1	451	21	722	51	722	1.2	91	752	1.1	28.315	-H850	50-P112/M4	
49	761	2.2	4.9	475	20	761	49	761	2.2	86	792	2.0	29.822	-H3000	50-P112/M4	
46	807	1.1	4.6	503	19	807	46	807	1.1	81	840	1.0	31.639	-H850	50-P112/M4	
45	823	1.8	4.5	513	19	823	45	823	1.8	80	857	1.6	32.267	-H1500	50-P112/M4	
44	835	2.2	4.4	521	18	835	44	835	2.2	78	870	2.0	32.756	-H3000	50-P112/M4	
44	851	5.9	4.3	468	22	851	44	851	5.9	77	888	5.4	33.519	-H5000	40-P112/M4	
41	910	1.7	4.1	568	17	910	41	910	1.7	72	947	1.5	35.689	-H1500	50-P112/M4	
40	923	1.8	4.0	576	17	923	40	923	1.8	71	961	1.7	36.193	-H3000	50-P112/M4	
39	943	5.3	3.9	519	20	943	39	943	5.3	69	984	4.8	37.147	-H5000	40-P112/M4	
37	999	1.5	3.7	623	15	1040	37	999	1.5	66	1040	1.3	39.160	-H1500	50-P112/M4	
37	1014	1.8	3.6	633	15	1014	37	1014	1.8	65	1055	1.7	39.753	-H3000	50-P112/M4	
35	1061	4.7	3.5	584	18	1061	35	1061	4.7	62	1108	4.5	41.819	-H5000	40-P112/M4	
34	1105	1.4	3.3	689	14	1105	34	1105	1.4	59	1150	1.3	43.313	-H1500	50-P112/M4	
32	1167	1.5	3.2	728	13	1167	32	1167	1.5	56	1215	1.4	45.750	-H3000	50-P112/M4	
31	1197	4.2	3.1	659	16	1197	31	1197	4.2	55	1250	4.0	47.175	-H5000	40-P112/M4	
29	1282	1.5	2.9	800	12	1282	29	1282	1.5	51	1334	1.4	50.250	-H3000	50-P112/M4	
29	1277	3.9	2.9	703	15	1277	29	1277	3.9	51	1333	3.8	50.326	-H5000	40-P112/M4	
28	1341	5.8	2.7	738	14	1341	28	1341	5.8	49	1400	5.5	52.844	-H8000	40-P112/M4	
27	1357	3.7	2.7	746	14	1357	27	1357	3.7	48	1417	3.5	53.471	-H5000	40-P112/M4	
26	1437	5.6	2.6	791	13	1437	26	1437	5.6	45	1500	5.3	56.635	-H8000	40-P112/M4	
23	1586	3.2	2.3	872	12	1586	23	1586	3.2	41	1655	3.0	62.478	-H5000	40-P112/M4	

3-stage gearboxes

Mains operation 400 V, 50 Hz			Inverter operation 5 Hz -		- 20 ... 25 Hz		- 50 Hz (1:10)			- 87 Hz (1:17.4)			i	Product		
n_2 [r/min]	M_2 [Nm]	c	n_{22} [r/min]	M_{22} [Nm]	n_{21} [r/min]	M_2 [Nm]	n_2 [r/min]	M_2 [Nm]	c	n_2 [r/min]	M_2 [Nm]	c		g500	m5□□	
49	742	1.2	4.9	463	20	742	49	742	1.2				29.536	-H850	50-P112/M4	
44	829	1.0	4.4	517	18	829	44	829	1.0				33.003	-H850	50-P112/M4	
38	950	0.9	3.8	592	16	950	38	950	0.9				37.799	-H850	50-P112/M4	
36	1018	1.5	3.6	635	15	1018	36	1018	1.5				40.517	-H1500	50-P112/M4	
35	1039	0.8	3.5	648	15	1039	35	1039	0.8				41.350	-H850	50-P112/M4	
32	1126	1.3	3.2	702	13	1126	32	1126	1.3				44.814	-H1500	50-P112/M4	
31	1185	2.4	3.1	740	13	1185	31	1185	2.4				47.186	-H3000	50-P112/M4	
29	1253	1.2	2.9	782	12	1253	29	1253	1.2				49.867	-H1500	50-P112/M4	
28	1302	2.2	2.8	812	12	1302	28	1302	2.2				51.828	-H3000	50-P112/M4	
27	1351	2.2	2.7	843	11	1351	27	1351	2.2	48	1406	2.0	53.770	-H3000	50-P112/M4	
26	1403	1.1	2.6	875	11	1403	26	1403	1.1				55.851	-H1500	50-P112/M4	

Selection tables, 4-pole motors

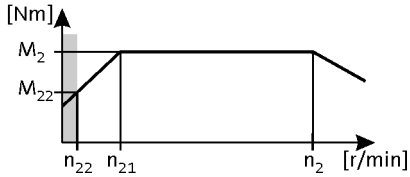

50 Hz: P_N = 4.0 kW
87 Hz: P_N = 7.35 kW

3-stage gearboxes

Mains operation 400 V, 50 Hz			Inverter operation 5 Hz -		- 20 ... 25 Hz		- 50 Hz (1:10)			- 87 Hz (1:17.4)			i	Product		
n_2 [r/min]	M_2 [Nm]	c	n_{22} [r/min]	M_{22} [Nm]	n_{21} [r/min]	M_2 [Nm]	n_2 [r/min]	M_2 [Nm]	c	n_2 [r/min]	M_2 [Nm]	c		g500	m5□□	
25	1484	2.0	2.5	926	10	1484	25	1484	2.0				59.059	-H3000	50-P112/M4	
24	1552	1.0	2.3	968	9.7	1552	24	1552	1.0				61.774	-H1500	50-P112/M4	
23	1567	3.2	2.3	862	12	1567	23	1567	3.2	41	1636	2.9	62.664	-H5000	40-P112/M4	
22	1627	1.8	2.2	1015	9.3	1627	22	1627	1.8	40	1693	1.7	64.744	-H3000	50-P112/M4	
21	1717	2.9	2.1	945	11	1717	21	1717	2.9	37	1793	2.7	68.658	-H5000	40-P112/M4	
21	1719	4.7	2.1	945	11	1719	21	1719	4.7	37	1794	4.2	68.712	-H8000	40-P112/M4	
20	1787	1.7	2.0	1115	8.4	1787	20	1787	1.7	36	1860	1.5	71.112	-H3000	50-P112/M4	
20	1790	0.8	2.0	1117	8.4	1790	20	1790	0.8				71.238	-H1500	50-P112/M4	
19	1898	4.2	1.9	1044	9.6	1898	19	1898	4.2	34	1981	3.8	75.868	-H8000	40-P112/M4	
19	1970	2.5	1.8	1084	9.3	1970	19	1970	2.5	33	2057	2.3	78.777	-H5000	40-P112/M4	
18	1994	1.5	1.8	1244	7.6	1994	18	1994	1.5	32	2076	1.4	79.375	-H3000	50-P112/M4	
17	2158	3.7	1.7	1187	8.5	2158	17	2158	3.7	30	2253	3.6	86.290	-H8000	40-P112/M4	
17	2190	1.4	1.7	1366	6.9	2190	17	2190	1.4	29	2280	1.3	87.183	-H3000	50-P112/M4	
16	2249	2.2	1.6	1237	8.1	2249	16	2249	2.2	29	2347	2.1	89.909	-H5000	40-P112/M4	
15	2445	3.3	1.5	1345	7.5	2445	15	2445	3.3	26	2552	3.1	97.753	-H8000	40-P112/M4	
15	2478	5.7	1.5	1363	7.4	2478	15	2478	5.7	26	2586	5.4	99.061	-H14000	40-P112/M4	
14	2552	2.0	1.4	1404	7.2	2552	14	2552	2.0	25	2664	1.9	102.053	-H5000	40-P112/M4	
14	2702	1.1	1.3	1686	5.6	2702	14	2702	1.1	24	2812	1.1	107.541	-H3000	50-P112/M4	
13	2758	2.9	1.3	1517	6.6	2758	13	2758	2.9	23	2879	2.8	110.259	-H8000	40-P112/M4	
13	2793	5.0	1.3	1537	6.5	2793	13	2793	5.0	23	2916	4.8	111.686	-H14000	40-P112/M4	
13	2860	1.8	1.3	1573	6.4	2860	13	2860	1.8	23	2986	1.7	114.361	-H5000	40-P112/M4	
12	2968	1.0	1.2	1851	5.1	2968	12	2968	1.0	22	3089	1.0	118.119	-H3000	50-P112/M4	
12	3077	2.6	1.2	1693	5.9	3077	12	3077	2.6	21	3212	2.5	123.043	-H8000	40-P112/M4	
12	3133	4.5	1.2	1724	5.8	3133	12	3133	4.5	21	3271	4.3	125.283	-H14000	40-P112/M4	
11	3281	0.9	1.1	2047	4.6	3281	11	3281	0.9	20	3415	0.9	130.585	-H3000	50-P112/M4	
11	3273	1.5	1.1	1800	5.6	3273	11	3273	1.5	20	3416	1.5	130.842	-H5000	40-P112/M4	
11	3458	2.3	1.0	1902	5.3	3458	11	3458	2.3	19	3610	2.2	138.255	-H8000	40-P112/M4	
10	3512	4.0	1.0	1932	5.2	3512	10	3512	4.0	18	3666	3.8	140.406	-H14000	40-P112/M4	
10	3603	0.8	1.0	2248	4.2	3603	10	3603	0.8				143.430	-H3000	50-P112/M4	
10	3639	1.4	1.0	2002	5.0	3639	10	3639	1.4	18	3799	1.3	145.489	-H5000	40-P112/M4	
9.4	3905	2.1	0.9	2148	4.7	3905	9.4	3905	2.1	17	4076	2.0	156.114	-H8000	40-P112/M4	
9.3	3911	3.6	0.9	2151	4.7	3911	9.3	3911	3.6	16	4082	3.4	156.361	-H14000	40-P112/M4	
8.7	4193	1.2	0.9	2306	4.4	4193	8.7	4193	1.2	15	4376	1.1	167.626	-H5000	40-P112/M4	
8.3	4391	3.2	0.8	2415	4.2	4391	8.3	4391	3.2	15	4584	3.1	175.571	-H14000	40-P112/M4	
8.3	4406	1.8	0.8	2424	4.1	4406	8.3	4406	1.8	15	4600	1.7	176.175	-H8000	40-P112/M4	

Selection tables, 4-pole motors

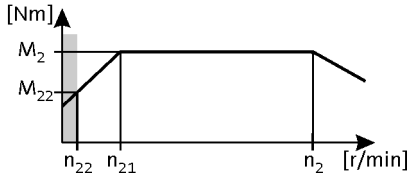

50 Hz: P_N = 4.0 kW
87 Hz: P_N = 7.35 kW

3-stage gearboxes

Mains operation 400 V, 50 Hz			Inverter operation 5 Hz -		- 20 ... 25 Hz		- 50 Hz (1:10)			- 87 Hz (1:17.4)			i	Product		
n_2 [r/min]	M_2 [Nm]	c	n_{22} [r/min]	M_{22} [Nm]	n_{21} [r/min]	M_2 [Nm]	n_2 [r/min]	M_2 [Nm]	c	n_2 [r/min]	M_2 [Nm]	c		g500	m5□□	
7.8	4659	1.1	0.8	2563	3.9	4659	7.8	4659	1.1	14	4864	1.0	186.282	-H5000	40-P112/M4	
7.5	4846	2.9	0.7	2666	3.8	4846	7.5	4846	2.9	13	5059	2.8	193.751	-H14000	40-P112/M4	
7.5	4883	1.6	0.7	2686	3.7	4883	7.5	4883	1.6	13	5097	1.6	195.242	-H8000	40-P112/M4	
7.0	5219	1.0	0.7	2871	3.5	5219	7.0	5219	1.0	12	5448	0.9	208.671	-H5000	40-P112/M4	
6.6	5497	1.5	0.7	3024	3.3	5497	6.6	5497	1.5	12	5739	1.4	219.799	-H8000	40-P112/M4	
6.6	5517	2.5	0.7	3035	3.3	5517	6.6	5517	2.5	12	5759	2.4	220.580	-H14000	40-P112/M4	
6.2	5904	0.9	0.6	3247	3.1	5904	6.2	5904	0.9	11	6163	0.8	236.034	-H5000	40-P112/M4	
6.0	6095	2.3	0.6	3352	3.0	6095	6.0	6095	2.3	11	6362	2.2	243.679	-H14000	40-P112/M4	
5.9	6202	1.3	0.6	3411	2.9	6202	5.9	6202	1.3	10	6474	1.2	247.950	-H8000	40-P112/M4	
5.5	6616	1.2	0.5	3639	2.8	6616	5.5	6616	1.2	9.7	6906	1.2	264.509	-H8000	40-P112/M4	
5.4	6788	2.1	0.5	3734	2.7	6788	5.4	6788	2.1	9.5	7086	2.0	271.398	-H14000	40-P112/M4	
5.2	7029	1.1	0.5	3866	2.6	7029	5.2	7029	1.1	9.1	7338	1.1	281.041	-H8000	40-P112/M4	
4.8	7635	1.8	0.5	4200	2.4	7635	4.8	7635	1.8	8.4	7970	1.8	305.276	-H14000	40-P112/M4	
4.5	8183	1.7	0.4	4501	2.2	8183	4.5	8183	1.7	7.9	8542	1.6	327.175	-H14000	40-P112/M4	
4.4	8213	1.0	0.4	4518	2.2	8213	4.4	8213	1.0	7.8	8574	0.9	328.381	-H8000	40-P112/M4	

Selection tables, 4-pole motors

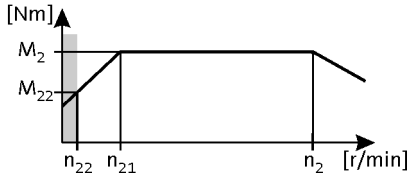

50 Hz: P_N = 5.5 kW
87 Hz: P_N = 9.6 kW

2-stage gearboxes

Mains operation 400 V, 50 Hz			Inverter operation 5 Hz -		- 20 ... 25 Hz		- 50 Hz (1:10)			- 87 Hz (1:17.4)			i	Product		
n_2 [r/min]	M_2 [Nm]	c	n_{22} [r/min]	M_{22} [Nm]	n_{21} [r/min]	M_2 [Nm]	n_2 [r/min]	M_2 [Nm]	c	n_2 [r/min]	M_2 [Nm]	c		g500	m5□□	
464	110	2.8	46	68	191	110	464	110	2.8				3.147	-H850	50-P132/M4	
447	114	2.1	44	71	184	114	447	114	2.1				3.267	-H600	50-P132/M4	
424	120	2.1	42	75	174	120	424	120	2.1				3.444	-H450	50-P132/M4	
390	131	5.9	39	81	160	131	390	131	5.9				3.743	-H1500	50-P132/M4	
335	152	2.5	33	94	138	152	335	152	2.5				4.362	-H850	50-P132/M4	
326	156	1.9	32	97	134	156	326	156	1.9				4.480	-H600	50-P132/M4	
309	165	1.8	31	102	127	165	309	165	1.8				4.724	-H450	50-P132/M4	
307	166	5.6	31	103	126	166	307	166	5.6				4.758	-H1500	50-P132/M4	
272	187	2.3	27	116	112	187	272	187	2.3				5.368	-H850	50-P132/M4	
270	188	5.4	27	117	111	188	270	188	5.4				5.400	-H1500	50-P132/M4	
257	198	1.6	26	123	106	198	257	198	1.6				5.678	-H450	50-P132/M4	
255	200	1.7	25	124	105	200	255	200	1.7				5.733	-H600	50-P132/M4	
246	208	2.7	24	129	101	208	246	208	2.7				5.946	-H850	50-P132/M4	
242	211	1.5	24	131	99	211	242	211	1.5				6.045	-H450	50-P132/M4	
234	218	5.0	23	135	96	218	234	218	5.0				6.245	-H1500	50-P132/M4	
226	225	1.8	23	140	93	225	226	225	1.8				6.456	-H600	50-P132/M4	
221	231	1.5	22	143	91	231	221	231	1.5				6.613	-H450	50-P132/M4	
220	232	2.5	22	144	90	232	220	232	2.5				6.644	-H850	50-P132/M4	
213	240	4.8	21	149	87	240	213	240	4.8				6.864	-H1500	50-P132/M4	
201	253	1.7	20	157	83	253	201	253	1.7				7.250	-H600	50-P132/M4	
192	265	4.6	19	164	79	265	192	265	4.6				7.592	-H1500	50-P132/M4	
188	272	1.3	19	169	77	272	188	272	1.3				7.787	-H450	50-P132/M4	
177	288	2.1	18	178	73	288	177	288	2.1				8.241	-H850	50-P132/M4	
166	307	1.2	17	191	68	307	166	307	1.2				8.800	-H450	50-P132/M4	
165	309	1.6	16	192	68	309	165	309	1.6				8.853	-H600	50-P132/M4	
162	314	4.2	16	195	67	314	162	314	4.2				9.010	-H1500	50-P132/M4	
159	321	2.0	16	199	65	321	159	321	2.0				9.208	-H850	50-P132/M4	
147	347	1.5	15	215	60	347	147	347	1.5				9.943	-H600	50-P132/M4	
147	348	1.1	15	216	60	348	147	348	1.1				9.965	-H450	50-P132/M4	
144	354	1.9	14	220	59	354	144	354	1.9				10.143	-H850	50-P132/M4	
142	358	3.9	14	222	58	358	142	358	3.9				10.267	-H1500	50-P132/M4	
130	393	1.0	13	244	53	393	130	393	1.0				11.262	-H450	50-P132/M4	
129	395	1.4	13	245	53	395	129	395	1.4				11.330	-H600	50-P132/M4	
129	396	3.5	13	246	53	396	129	396	3.5				11.356	-H1500	50-P132/M4	
129	396	1.8	13	246	53	396	129	396	1.8				11.360	-H850	50-P132/M4	

Selection tables, 4-pole motors

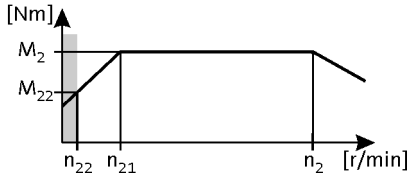

50 Hz: P_N = 5.5 kW
87 Hz: P_N = 9.6 kW

2-stage gearboxes

Mains operation 400 V, 50 Hz			Inverter operation 5 Hz -		- 20 ... 25 Hz		- 50 Hz (1:10)			- 87 Hz (1:17.4)			i	Product		
n_2 [r/min]	M_2 [Nm]	c	n_{22} [r/min]	M_{22} [Nm]	n_{21} [r/min]	M_2 [Nm]	n_2 [r/min]	M_2 [Nm]	c	n_2 [r/min]	M_2 [Nm]	c		g500	m5□□	
126	406	5.9	13	252	52	406	126	406	5.9				11.619	-H3000	50-P132/M4	
119	430	1.0	12	267	49	430	119	430	1.0				12.320	-H450	50-P132/M4	
118	431	3.3	12	268	49	431	118	431	3.3				12.362	-H1500	50-P132/M4	
118	433	1.3	12	268	48	433	118	433	1.3				12.395	-H600	50-P132/M4	
115	443	1.6	11	275	47	443	115	443	1.6				12.693	-H850	50-P132/M4	
114	445	5.6	11	276	47	445	114	445	5.6				12.762	-H3000	50-P132/M4	
107	477	3.0	11	296	44	477	107	477	3.0				13.673	-H1500	50-P132/M4	
105	485	0.9	10	301	43	485	105	485	0.9				13.905	-H450	50-P132/M4	
105	486	1.2	10	301	43	486	105	486	1.2				13.920	-H600	50-P132/M4	
103	497	5.1	10	308	42	497	103	497	5.1				14.233	-H3000	50-P132/M4	
101	506	1.5	10	314	41	506	101	506	1.5				14.490	-H850	50-P132/M4	
96	529	2.7	9.6	328	40	529	96	529	2.7				15.156	-H1500	50-P132/M4	
93	546	4.8	9.3	338	38	546	93	546	4.8				15.633	-H3000	50-P132/M4	
92	552	1.1	9.2	342	38	552	92	552	1.1				15.810	-H600	50-P132/M4	
90	565	1.4	9.0	351	37	565	90	565	1.4				16.190	-H850	50-P132/M4	
87	585	2.5	8.7	363	36	585	87	585	2.5				16.763	-H1500	50-P132/M4	
82	620	1.3	8.2	384	34	620	82	620	1.3				17.750	-H850	50-P132/M4	
82	620	1.0	8.2	384	34	620	82	620	1.0				17.755	-H600	50-P132/M4	
78	654	4.2	7.7	406	32	654	78	654	4.2				18.752	-H3000	50-P132/M4	
75	676	0.9	7.5	419	31	676	75	676	0.9				19.367	-H600	50-P132/M4	
74	692	1.2	7.3	429	30	692	74	692	1.2				19.833	-H850	50-P132/M4	
71	717	2.1	7.1	445	29	717	71	717	2.1				20.533	-H1500	50-P132/M4	
71	719	3.9	7.0	446	29	719	71	719	3.9				20.596	-H3000	50-P132/M4	
64	793	1.9	6.4	492	26	793	64	793	1.9				22.711	-H1500	50-P132/M4	
63	804	3.6	6.3	499	26	804	63	804	3.6				23.044	-H3000	50-P132/M4	
63	806	1.1	6.3	500	26	806	63	806	1.1				23.103	-H850	50-P132/M4	
59	870	1.7	5.8	540	24	870	59	870	1.7				24.933	-H1500	50-P132/M4	
58	883	3.4	5.7	548	24	883	58	883	3.4				25.311	-H3000	50-P132/M4	
57	901	0.9	5.6	559	23	901	57	901	0.9				25.815	-H850	50-P132/M4	
56	912	5.5	5.5	501	28	907	56	912	5.5	98	907	5.2	26.305	-H5000	40-P132/M4	
53	963	1.6	5.3	597	22	963	53	963	1.6				27.578	-H1500	50-P132/M4	
50	1029	4.9	4.9	566	25	1024	50	1029	4.9	87	1024	4.6	29.702	-H5000	40-P132/M4	
49	1041	2.9	4.9	646	20	1041	49	1041	2.9				29.822	-H3000	50-P132/M4	
45	1143	2.6	4.4	709	18	1143	45	1143	2.6				32.756	-H3000	50-P132/M4	
44	1162	4.3	4.3	639	22	1155	44	1162	4.3	77	1155	4.1	33.519	-H5000	40-P132/M4	

Selection tables, 4-pole motors

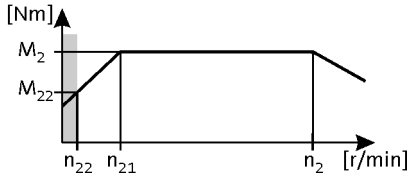

50 Hz: P_N = 5.5 kW
87 Hz: P_N = 9.6 kW

2-stage gearboxes

Mains operation 400 V, 50 Hz			Inverter operation 5 Hz -		- 20 ... 25 Hz		- 50 Hz (1:10)			- 87 Hz (1:17.4)			i	Product		
n_2 [r/min]	M_2 [Nm]	c	n_{22} [r/min]	M_{22} [Nm]	n_{21} [r/min]	M_2 [Nm]	n_2 [r/min]	M_2 [Nm]	c	n_2 [r/min]	M_2 [Nm]	c		g500	m5□□	
40	1263	2.4	4.0	784	17	1263	40	1263	2.4				36.193	-H3000	50-P132/M4	
40	1287	3.9	3.9	708	20	1280	40	1287	3.9	70	1280	3.7	37.147	-H5000	40-P132/M4	
39	1323	5.7	3.8	728	19	1316	39	1323	5.7	68	1316	5.4	38.183	-H8000	40-P132/M4	
37	1387	2.2	3.6	861	15	1387	37	1387	2.2				39.753	-H3000	50-P132/M4	
35	1449	3.5	3.5	797	18	1441	35	1449	3.5	62	1441	3.5	41.819	-H5000	40-P132/M4	
35	1462	5.2	3.4	804	17	1454	35	1462	5.2	61	1454	5.3	42.182	-H8000	40-P132/M4	
31	1628	4.7	3.1	896	16	1619	31	1628	4.7	55	1619	4.7	46.980	-H8000	40-P132/M4	
31	1635	3.1	3.1	899	16	1626	31	1635	3.1	55	1626	3.1	47.175	-H5000	40-P132/M4	
29	1744	2.9	2.9	959	15	1735	29	1744	2.9	51	1735	2.9	50.326	-H5000	40-P132/M4	
28	1831	4.2	2.7	1007	14	1821	28	1831	4.2	49	1821	4.2	52.844	-H8000	40-P132/M4	
28	1853	2.7	2.7	1019	14	1843	28	1853	2.7	48	1843	2.7	53.471	-H5000	40-P132/M4	
26	1963	4.1	2.6	1080	13	1952	26	1963	4.1	46	1952	4.1	56.635	-H8000	40-P132/M4	
24	2165	2.3	2.3	1191	12	2153	24	2165	2.3	41	2153	2.3	62.478	-H5000	40-P132/M4	

3-stage gearboxes

Mains operation 400 V, 50 Hz			Inverter operation 5 Hz -		- 20 ... 25 Hz		- 50 Hz (1:10)			- 87 Hz (1:17.4)			i	Product		
n_2 [r/min]	M_2 [Nm]	c	n_{22} [r/min]	M_{22} [Nm]	n_{21} [r/min]	M_2 [Nm]	n_2 [r/min]	M_2 [Nm]	c	n_2 [r/min]	M_2 [Nm]	c		g500	m5□□	
49	1015	0.8	4.9	630	20	1015	49	1015	0.8				29.536	-H850	50-P132/M4	
37	1346	5.9	3.7	740	19	1339	37	1346	5.9	66	1339	5.0	39.407	-H8000	40-P132/M4	
36	1393	1.1	3.6	864	15	1393	36	1393	1.1				40.517	-H1500	50-P132/M4	
34	1486	5.4	3.3	818	17	1478	34	1486	5.4	59	1478	4.5	43.511	-H8000	40-P132/M4	
33	1541	1.0	3.2	956	13	1541	33	1541	1.0				44.814	-H1500	50-P132/M4	
31	1622	1.7	3.1	1006	13	1622	31	1622	1.7				47.186	-H3000	50-P132/M4	
30	1675	4.8	3.0	921	15	1666	30	1675	4.8	53	1666	4.6	49.045	-H8000	40-P132/M4	
29	1714	0.9	2.9	1063	12	1714	29	1714	0.9				49.867	-H1500	50-P132/M4	
28	1782	1.6	2.8	1105	12	1782	28	1782	1.6				51.828	-H3000	50-P132/M4	
27	1849	1.6	2.7	1147	11	1849	27	1849	1.6				53.770	-H3000	50-P132/M4	
25	2030	1.5	2.5	1259	10	2030	25	2030	1.5				59.059	-H3000	50-P132/M4	
25	2043	3.9	2.4	1124	12	2032	25	2043	3.9	43	2032	3.7	59.819	-H8000	40-P132/M4	
24	2140	2.3	2.3	1177	12	2129	24	2140	2.3	41	2129	2.2	62.664	-H5000	40-P132/M4	
23	2226	1.4	2.2	1381	9.3	2226	23	2226	1.4				64.744	-H3000	50-P132/M4	
21	2345	2.1	2.1	1290	11	2332	21	2345	2.1	38	2332	2.0	68.658	-H5000	40-P132/M4	
21	2347	3.4	2.1	1291	11	2334	21	2347	3.4	38	2334	3.3	68.712	-H8000	40-P132/M4	
21	2445	1.2	2.0	1516	8.4	2445	21	2445	1.2				71.112	-H3000	50-P132/M4	
19	2591	3.1	1.9	1425	9.7	2577	19	2591	3.1	34	2577	2.9	75.868	-H8000	40-P132/M4	
19	2691	1.9	1.8	1480	9.3	2676	19	2691	1.9	33	2676	1.8	78.777	-H5000	40-P132/M4	
18	2729	1.1	1.8	1693	7.6	2729	18	2729	1.1				79.375	-H3000	50-P132/M4	
18	2737	5.1	1.8	1505	9.2	2722	18	2737	5.1	32	2722	5.1	80.123	-H14000	40-P132/M4	
17	2947	2.7	1.7	1621	8.5	2931	17	2947	2.7	30	2931	2.7	86.290	-H8000	40-P132/M4	

Selection tables, 4-pole motors

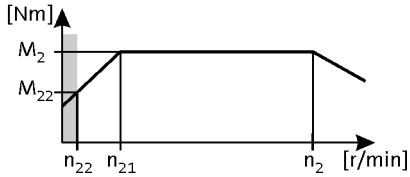

50 Hz: P_N = 5.5 kW
87 Hz: P_N = 9.6 kW

3-stage gearboxes

Mains operation 400 V, 50 Hz			Inverter operation 5 Hz -		- 20 ... 25 Hz		- 50 Hz (1:10)			- 87 Hz (1:17.4)			i	Product		
n_2 [r/min]	M_2 [Nm]	c	n_{22} [r/min]	M_{22} [Nm]	n_{21} [r/min]	M_2 [Nm]	n_2 [r/min]	M_2 [Nm]	c	n_2 [r/min]	M_2 [Nm]	c		g500	m5□□	
17	2997	1.0	1.7	1859	6.9	2997	17	2997	1.0				87.183	-H3000	50-P132/M4	
16	3071	1.6	1.6	1689	8.2	3054	16	3071	1.6	29	3054	1.6	89.909	-H5000	40-P132/M4	
16	3106	4.5	1.6	1709	8.1	3089	16	3106	4.5	28	3089	4.5	90.945	-H14000	40-P132/M4	
15	3339	2.4	1.5	1837	7.5	3321	15	3339	2.4	26	3321	2.4	97.753	-H8000	40-P132/M4	
15	3384	4.1	1.5	1861	7.4	3365	15	3384	4.1	26	3365	4.2	99.061	-H14000	40-P132/M4	
14	3486	1.4	1.4	1917	7.2	3467	14	3486	1.4	25	3467	1.4	102.053	-H5000	40-P132/M4	
14	3697	0.8	1.3	2293	5.6	3697	14	3697	0.8				107.541	-H3000	50-P132/M4	
13	3766	2.1	1.3	2072	6.7	3745	13	3766	2.1	23	3745	2.1	110.259	-H8000	40-P132/M4	
13	3815	3.7	1.3	2098	6.6	3794	13	3815	3.7	23	3794	3.7	111.686	-H14000	40-P132/M4	
13	3906	1.3	1.3	2149	6.4	3885	13	3906	1.3	23	3885	1.3	114.361	-H5000	40-P132/M4	
12	4203	1.9	1.2	2312	6.0	4180	12	4203	1.9	21	4180	1.9	123.043	-H8000	40-P132/M4	
12	4279	3.3	1.2	2354	5.9	4256	12	4279	3.3	21	4256	3.3	125.283	-H14000	40-P132/M4	
11	4469	1.1	1.1	2458	5.6	4445	11	4469	1.1	20	4445	1.1	130.842	-H5000	40-P132/M4	
11	4722	1.7	1.0	2598	5.3	4696	11	4722	1.7	19	4696	1.7	138.255	-H8000	40-P132/M4	
11	4796	2.9	1.0	2638	5.2	4769	11	4796	2.9	18	4769	2.9	140.406	-H14000	40-P132/M4	
10	4969	1.0	1.0	2733	5.1	4942	10	4969	1.0	18	4942	1.0	145.489	-H5000	40-P132/M4	
9.4	5332	1.5	0.9	2933	4.7	5303	9.4	5332	1.5	17	5303	1.5	156.114	-H8000	40-P132/M4	
9.4	5341	2.6	0.9	2938	4.7	5311	9.4	5341	2.6	17	5311	2.6	156.361	-H14000	40-P132/M4	
8.8	5726	0.9	0.9	3149	4.4	5694	8.8	5726	0.9	15	5694	0.9	167.626	-H5000	40-P132/M4	
8.4	5997	2.3	0.8	3299	4.2	5964	8.4	5997	2.3	15	5964	2.4	175.571	-H14000	40-P132/M4	
8.3	6018	1.3	0.8	3310	4.2	5984	8.3	6018	1.3	15	5984	1.3	176.175	-H8000	40-P132/M4	
7.6	6618	2.1	0.7	3640	3.8	6582	7.6	6618	2.1	13	6582	2.1	193.751	-H14000	40-P132/M4	
7.5	6669	1.2	0.7	3668	3.8	6632	7.5	6669	1.2	13	6632	1.2	195.242	-H8000	40-P132/M4	
6.7	7508	1.1	0.7	4130	3.3	7466	6.7	7508	1.1	12	7466	1.1	219.799	-H8000	40-P132/M4	
6.7	7534	1.9	0.7	4144	3.3	7493	6.7	7534	1.9	12	7493	1.9	220.580	-H14000	40-P132/M4	
6.0	8323	1.7	0.6	4578	3.0	8277	6.0	8323	1.7	11	8277	1.7	243.679	-H14000	40-P132/M4	
5.9	8469	0.9	0.6	4658	3.0	8423	5.9	8469	0.9	10	8423	1.0	247.950	-H8000	40-P132/M4	
5.6	9035	0.9	0.5	4970	2.8	8985	5.6	9035	0.9	9.8	8985	0.9	264.509	-H8000	40-P132/M4	
5.4	9270	1.5	0.5	5099	2.7	9219	5.4	9270	1.5	9.5	9219	1.5	271.398	-H14000	40-P132/M4	
5.2	9599	0.8	0.5	5280	2.6	9547	5.2	9599	0.8	9.2	9547	0.8	281.041	-H8000	40-P132/M4	
4.8	10427	1.3	0.5	5735	2.4	10370	4.8	10427	1.3	8.5	10370	1.4	305.276	-H14000	40-P132/M4	
4.5	11175	1.3	0.4	6147	2.2	11114	4.5	11175	1.3	7.9	11114	1.3	327.175	-H14000	40-P132/M4	

Selection tables, 4-pole motors

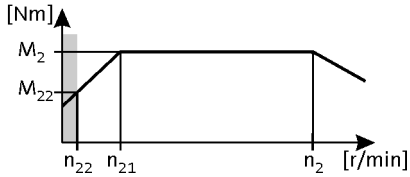

50 Hz: P_N = 7.5 kW
87 Hz: P_N = 13.1 kW

2-stage gearboxes

Mains operation 400 V, 50 Hz			Inverter operation 5 Hz -		- 20 ... 25 Hz		- 50 Hz (1:10)			- 87 Hz (1:17.4)			i	Product		
n_2 [r/min]	M_2 [Nm]	c	n_{22} [r/min]	M_{22} [Nm]	n_{21} [r/min]	M_2 [Nm]	n_2 [r/min]	M_2 [Nm]	c	n_2 [r/min]	M_2 [Nm]	c		g500	m5□□	
469	148	2.1	46	94	191	148	469	148	2.1				3.147	-H850	50-P132/L4	
452	154	1.6	44	97	184	154	452	154	1.6				3.267	-H600	50-P132/L4	
429	162	1.6	42	103	174	162	429	162	1.6				3.444	-H450	50-P132/L4	
395	176	4.4	39	111	160	176	395	176	4.4				3.743	-H1500	50-P132/L4	
339	205	1.8	33	130	138	205	339	205	1.8				4.362	-H850	50-P132/L4	
330	211	1.4	32	133	134	211	330	211	1.4				4.480	-H600	50-P132/L4	
313	222	1.3	31	141	127	222	313	222	1.3				4.724	-H450	50-P132/L4	
310	224	4.1	31	142	126	224	310	224	4.1				4.758	-H1500	50-P132/L4	
275	253	1.7	27	160	112	253	275	253	1.7				5.368	-H850	50-P132/L4	
274	254	4.0	27	161	111	254	274	254	4.0				5.400	-H1500	50-P132/L4	
260	267	1.2	26	169	106	267	260	267	1.2				5.678	-H450	50-P132/L4	
258	270	1.3	25	171	105	270	258	270	1.3				5.733	-H600	50-P132/L4	
248	280	2.0	24	177	101	280	248	280	2.0				5.946	-H850	50-P132/L4	
244	284	1.1	24	180	99	284	244	284	1.1				6.045	-H450	50-P132/L4	
237	294	3.7	23	186	96	294	237	294	3.7				6.245	-H1500	50-P132/L4	
229	304	1.3	23	192	93	304	229	304	1.3				6.456	-H600	50-P132/L4	
223	311	1.1	22	197	91	311	223	311	1.1				6.613	-H450	50-P132/L4	
222	313	1.9	22	198	90	313	222	313	1.9				6.644	-H850	50-P132/L4	
215	323	3.6	21	204	87	323	215	323	3.6				6.864	-H1500	50-P132/L4	
204	341	1.3	20	216	83	341	204	341	1.3				7.250	-H600	50-P132/L4	
195	357	3.4	19	226	79	357	195	357	3.4				7.592	-H1500	50-P132/L4	
190	366	1.0	19	232	77	366	190	366	1.0				7.787	-H450	50-P132/L4	
179	388	1.6	18	245	73	388	179	388	1.6				8.241	-H850	50-P132/L4	
168	414	0.9	17	262	68	414	168	414	0.9				8.800	-H450	50-P132/L4	
167	417	1.2	16	264	68	417	167	417	1.2				8.853	-H600	50-P132/L4	
164	424	3.1	16	268	67	424	164	424	3.1				9.010	-H1500	50-P132/L4	
160	433	1.5	16	274	65	433	160	433	1.5				9.208	-H850	50-P132/L4	
149	468	1.1	15	296	60	468	149	468	1.1				9.943	-H600	50-P132/L4	
148	469	0.8	15	297	60	469	148	469	0.8				9.965	-H450	50-P132/L4	
148	471	4.9	15	298	60	471	148	471	4.9				10.005	-H3000	50-P132/L4	
146	477	1.4	14	302	59	477	146	477	1.4				10.143	-H850	50-P132/L4	
144	483	2.9	14	306	58	483	144	483	2.9				10.267	-H1500	50-P132/L4	
130	533	1.0	13	337	53	533	130	533	1.0				11.330	-H600	50-P132/L4	
130	534	2.6	13	338	53	534	130	534	2.6				11.356	-H1500	50-P132/L4	
130	534	1.3	13	338	53	534	130	534	1.3				11.360	-H850	50-P132/L4	

Selection tables, 4-pole motors

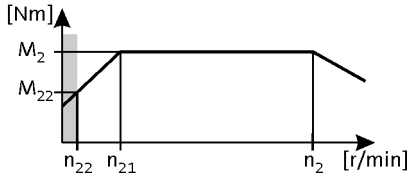

50 Hz: P_N = 7.5 kW
87 Hz: P_N = 13.1 kW

2-stage gearboxes

Mains operation 400 V, 50 Hz			Inverter operation 5 Hz -		- 20 ... 25 Hz		- 50 Hz (1:10)			- 87 Hz (1:17.4)			i	Product		
n_2 [r/min]	M_2 [Nm]	c	n_{22} [r/min]	M_{22} [Nm]	n_{21} [r/min]	M_2 [Nm]	n_2 [r/min]	M_2 [Nm]	c	n_2 [r/min]	M_2 [Nm]	c		g500	m5□□	
127	547	4.4	13	346	52	547	127	547	4.4				11.619	-H3000	50-P132/L4	
120	582	2.4	12	368	49	582	120	582	2.4				12.362	-H1500	50-P132/L4	
119	583	1.0	12	369	48	583	119	583	1.0				12.395	-H600	50-P132/L4	
116	597	1.2	11	378	47	597	116	597	1.2				12.693	-H850	50-P132/L4	
116	600	4.1	11	380	47	600	116	600	4.1				12.762	-H3000	50-P132/L4	
108	643	2.2	11	407	44	643	108	643	2.2				13.673	-H1500	50-P132/L4	
106	655	0.9	10	415	43	655	106	655	0.9				13.920	-H600	50-P132/L4	
104	670	3.8	10	424	42	670	104	670	3.8				14.233	-H3000	50-P132/L4	
102	682	1.1	10	431	41	682	102	682	1.1				14.490	-H850	50-P132/L4	
98	713	2.0	9.6	451	40	713	98	713	2.0				15.156	-H1500	50-P132/L4	
95	735	3.6	9.3	466	38	735	95	735	3.6				15.633	-H3000	50-P132/L4	
93	744	0.8	9.2	471	38	744	93	744	0.8				15.810	-H600	50-P132/L4	
91	762	1.0	9.0	482	37	762	91	762	1.0				16.190	-H850	50-P132/L4	
88	789	1.8	8.7	499	36	789	88	789	1.8				16.763	-H1500	50-P132/L4	
83	835	1.0	8.2	529	34	835	83	835	1.0				17.750	-H850	50-P132/L4	
79	882	5.7	7.8	485	40	882	79	882	5.7				18.599	-H5000	40-P132/L4	
79	882	3.1	7.7	558	32	882	79	882	3.1				18.752	-H3000	50-P132/L4	
75	933	0.9	7.3	591	30	933	75	933	0.9				19.833	-H850	50-P132/L4	
72	966	1.6	7.1	611	29	966	72	966	1.6				20.533	-H1500	50-P132/L4	
72	969	2.9	7.0	613	29	969	72	969	2.9				20.596	-H3000	50-P132/L4	
70	995	5.0	6.9	547	35	989	70	995	5.0	123	989	4.2	20.978	-H5000	40-P132/L4	
65	1068	1.4	6.4	676	26	1068	65	1068	1.4				22.711	-H1500	50-P132/L4	
64	1084	2.7	6.3	686	26	1084	64	1084	2.7				23.044	-H3000	50-P132/L4	
63	1110	4.5	6.2	611	31	1103	63	1110	4.5	110	1103	3.8	23.410	-H5000	40-P132/L4	
59	1173	1.3	5.8	742	24	1173	59	1173	1.3				24.933	-H1500	50-P132/L4	
58	1191	2.5	5.7	754	24	1191	58	1191	2.5				25.311	-H3000	50-P132/L4	
56	1247	4.0	5.5	686	28	1240	56	1247	4.0	98	1240	3.8	26.305	-H5000	40-P132/L4	
54	1297	1.2	5.3	821	22	1297	54	1297	1.2				27.578	-H1500	50-P132/L4	
49	1409	3.6	4.9	775	25	1400	49	1409	3.6	87	1400	3.4	29.702	-H5000	40-P132/L4	
50	1403	2.1	4.9	888	20	1403	50	1403	2.1				29.822	-H3000	50-P132/L4	
48	1441	5.6	4.8	793	24	1432	48	1441	5.6	85	1432	5.3	30.392	-H8000	40-P132/L4	
45	1541	2.0	4.4	975	18	1541	45	1541	2.0				32.756	-H3000	50-P132/L4	
44	1590	3.2	4.3	874	22	1580	44	1590	3.2	77	1580	3.0	33.519	-H5000	40-P132/L4	
44	1590	5.0	4.3	875	22	1580	44	1590	5.0	77	1580	4.8	33.539	-H8000	40-P132/L4	
41	1703	1.8	4.0	1078	17	1703	41	1703	1.8				36.193	-H3000	50-P132/L4	

Selection tables, 4-pole motors

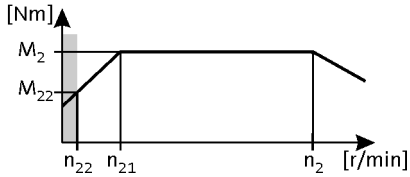

50 Hz: P_N = 7.5 kW
87 Hz: P_N = 13.1 kW

2-stage gearboxes

Mains operation 400 V, 50 Hz			Inverter operation 5 Hz -		- 20 ... 25 Hz		- 50 Hz (1:10)			- 87 Hz (1:17.4)			i	Product		
n_2 [r/min]	M_2 [Nm]	c	n_{22} [r/min]	M_{22} [Nm]	n_{21} [r/min]	M_2 [Nm]	n_2 [r/min]	M_2 [Nm]	c	n_2 [r/min]	M_2 [Nm]	c		g500	m5□□	
39	1762	2.8	3.9	969	20	1750	39	1762	2.8	69	1750	2.7	37.147	-H5000	40-P132/L4	
38	1811	4.2	3.8	996	19	1799	38	1811	4.2	67	1799	4.0	38.183	-H8000	40-P132/L4	
37	1870	1.6	3.6	1184	15	1870	37	1870	1.6				39.753	-H3000	50-P132/L4	
35	1983	2.5	3.5	1091	18	1971	35	1983	2.5	62	1971	2.5	41.819	-H5000	40-P132/L4	
35	2000	3.8	3.4	1100	17	1988	35	2000	3.8	61	1988	3.9	42.182	-H8000	40-P132/L4	
31	2228	3.4	3.1	1225	16	2214	31	2228	3.4	55	2214	3.4	46.980	-H8000	40-P132/L4	
31	2237	2.2	3.1	1231	16	2223	31	2237	2.2	55	2223	2.3	47.175	-H5000	40-P132/L4	
29	2386	2.1	2.9	1313	15	2372	29	2386	2.1	51	2372	2.1	50.326	-H5000	40-P132/L4	
28	2506	3.1	2.7	1378	14	2490	28	2506	3.1	49	2490	3.1	52.844	-H8000	40-P132/L4	
27	2536	2.0	2.7	1395	14	2520	27	2536	2.0	48	2520	2.0	53.471	-H5000	40-P132/L4	
26	2686	3.0	2.6	1477	13	2669	26	2686	3.0	46	2669	3.0	56.635	-H8000	40-P132/L4	
23	2963	1.7	2.3	1630	12	2944	23	2963	1.7	41	2944	1.7	62.478	-H5000	40-P132/L4	

3-stage gearboxes

Mains operation 400 V, 50 Hz			Inverter operation 5 Hz -		- 20 ... 25 Hz		- 50 Hz (1:10)			- 87 Hz (1:17.4)			i	Product		
n_2 [r/min]	M_2 [Nm]	c	n_{22} [r/min]	M_{22} [Nm]	n_{21} [r/min]	M_2 [Nm]	n_2 [r/min]	M_2 [Nm]	c	n_2 [r/min]	M_2 [Nm]	c		g500	m5□□	
43	1603	5.0	4.2	882	21	1593	43	1603	5.0	75	1593	4.2	34.307	-H8000	40-P132/L4	
37	1842	4.3	3.7	1013	19	1830	37	1842	4.3	65	1830	3.7	39.407	-H8000	40-P132/L4	
34	2034	3.9	3.3	1119	17	2021	34	2034	3.9	59	2021	3.3	43.511	-H8000	40-P132/L4	
31	2187	1.3	3.1	1384	13	2187	31	2187	1.3				47.186	-H3000	50-P132/L4	
30	2292	3.5	3.0	1261	15	2278	30	2292	3.5	53	2278	3.3	49.045	-H8000	40-P132/L4	
29	2402	1.2	2.8	1520	12	2402	29	2402	1.2				51.828	-H3000	50-P132/L4	
28	2492	1.2	2.7	1577	11	2492	28	2492	1.2				53.770	-H3000	50-P132/L4	
25	2693	5.2	2.5	1482	13	2677	25	2693	5.2	45	2677	5.0	57.630	-H14000	40-P132/L4	
25	2737	1.1	2.5	1732	10	2737	25	2737	1.1				59.059	-H3000	50-P132/L4	
25	2796	2.9	2.4	1538	12	2778	25	2796	2.9	43	2778	2.7	59.819	-H8000	40-P132/L4	
23	2929	1.7	2.3	1611	12	2910	23	2929	1.7	41	2910	1.6	62.664	-H5000	40-P132/L4	
23	3000	1.0	2.2	1899	9.3	3000	23	3000	1.0				64.744	-H3000	50-P132/L4	
22	3072	4.6	2.2	1690	11	3052	22	3072	4.6	39	3052	4.4	65.723	-H14000	40-P132/L4	
21	3209	1.6	2.1	1765	11	3189	21	3209	1.6	38	3189	1.5	68.658	-H5000	40-P132/L4	
21	3211	2.5	2.1	1766	11	3191	21	3211	2.5	38	3191	2.4	68.712	-H8000	40-P132/L4	
21	3295	0.9	2.0	2086	8.4	3295	21	3295	0.9				71.112	-H3000	50-P132/L4	
19	3546	2.3	1.9	1950	9.7	3524	19	3546	2.3	34	3524	2.2	75.868	-H8000	40-P132/L4	
19	3682	1.4	1.8	2025	9.3	3659	19	3682	1.4	33	3659	1.3	78.777	-H5000	40-P132/L4	
19	3678	0.8	1.8	2328	7.6	3678	19	3678	0.8				79.375	-H3000	50-P132/L4	
18	3745	3.7	1.8	2060	9.2	3721	18	3745	3.7	32	3721	3.8	80.123	-H14000	40-P132/L4	
17	4033	2.0	1.7	2218	8.5	4008	17	4033	2.0	30	4008	2.0	86.290	-H8000	40-P132/L4	
16	4202	1.2	1.6	2311	8.2	4176	16	4202	1.2	29	4176	1.2	89.909	-H5000	40-P132/L4	
16	4250	3.3	1.6	2338	8.1	4224	16	4250	3.3	28	4224	3.3	90.945	-H14000	40-P132/L4	

Selection tables, 4-pole motors

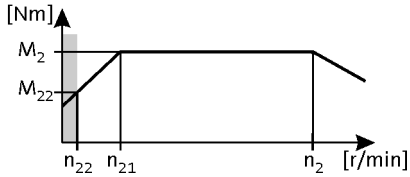

50 Hz: P_N = 7.5 kW
87 Hz: P_N = 13.1 kW

3-stage gearboxes

Mains operation 400 V, 50 Hz			Inverter operation 5 Hz -		- 20 ... 25 Hz		- 50 Hz (1:10)			- 87 Hz (1:17.4)			i	Product		
n_2 [r/min]	M_2 [Nm]	c	n_{22} [r/min]	M_{22} [Nm]	n_{21} [r/min]	M_2 [Nm]	n_2 [r/min]	M_2 [Nm]	c	n_2 [r/min]	M_2 [Nm]	c		g500	m5□□	
15	4569	1.8	1.5	2513	7.5	4540	15	4569	1.8	26	4540	1.8	97.753	-H8000	40-P132/L4	
15	4630	3.0	1.5	2547	7.4	4601	15	4630	3.0	26	4601	3.0	99.061	-H14000	40-P132/L4	
14	4770	1.1	1.4	2623	7.2	4740	14	4770	1.1	25	4740	1.1	102.053	-H5000	40-P132/L4	
13	5153	1.6	1.3	2834	6.7	5121	13	5153	1.6	23	5121	1.6	110.259	-H8000	40-P132/L4	
13	5220	2.7	1.3	2871	6.6	5187	13	5220	2.7	23	5187	2.7	111.686	-H14000	40-P132/L4	
13	5345	0.9	1.3	2940	6.4	5311	13	5345	0.9	23	5311	0.9	114.361	-H5000	40-P132/L4	
12	5751	1.4	1.2	3163	6.0	5715	12	5751	1.4	21	5715	1.4	123.043	-H8000	40-P132/L4	
12	5855	2.4	1.2	3221	5.9	5819	12	5855	2.4	21	5819	2.4	125.283	-H14000	40-P132/L4	
11	6115	0.8	1.1	3364	5.6	6077	11	6115	0.8	20	6077	0.8	130.842	-H5000	40-P132/L4	
11	6462	1.2	1.0	3554	5.3	6421	11	6462	1.2	19	6421	1.3	138.255	-H8000	40-P132/L4	
10	6562	2.1	1.0	3609	5.2	6521	10	6562	2.1	18	6521	2.2	140.406	-H14000	40-P132/L4	
9.4	7296	1.1	0.9	4013	4.7	7250	9.4	7296	1.1	17	7250	1.1	156.114	-H8000	40-P132/L4	
9.4	7308	1.9	0.9	4020	4.7	7262	9.4	7308	1.9	17	7262	1.9	156.361	-H14000	40-P132/L4	
8.3	8206	1.7	0.8	4513	4.2	8154	8.3	8206	1.7	15	8154	1.7	175.571	-H14000	40-P132/L4	
8.3	8234	1.0	0.8	4529	4.2	8182	8.3	8234	1.0	15	8182	1.0	176.175	-H8000	40-P132/L4	
7.6	9055	1.6	0.7	4981	3.8	8998	7.6	9055	1.6	13	8998	1.6	193.751	-H14000	40-P132/L4	
7.5	9125	0.9	0.7	5019	3.8	9068	7.5	9125	0.9	13	9068	0.9	195.242	-H8000	40-P132/L4	
6.6	10309	1.4	0.7	5670	3.3	10244	6.6	10309	1.4	12	10244	1.4	220.580	-H14000	40-P132/L4	
6.0	11389	1.2	0.6	6264	3.0	11317	6.0	11389	1.2	11	11317	1.2	243.679	-H14000	40-P132/L4	
5.4	12684	1.1	0.5	6977	2.7	12605	5.4	12684	1.1	9.5	12605	1.1	271.398	-H14000	40-P132/L4	
4.8	14267	1.0	0.5	7848	2.4	14178	4.8	14267	1.0	8.4	14178	1.0	305.276	-H14000	40-P132/L4	
4.5	15291	0.9	0.4	8411	2.2	15195	4.5	15291	0.9	7.9	15195	0.9	327.175	-H14000	40-P132/L4	

Selection tables, 4-pole motors

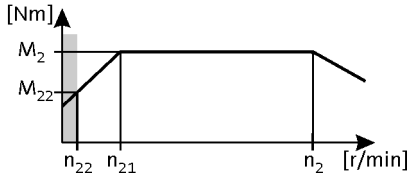

50 Hz: P_N = 11.0 kW
87 Hz: P_N = 19.2 kW

2-stage gearboxes

Mains operation 400 V, 50 Hz			Inverter operation 5 Hz -		- 20 ... 25 Hz		- 50 Hz (1:10)			- 87 Hz (1:17.4)			i	Product		
n_2 [r/min]	M_2 [Nm]	c	n_{22} [r/min]	M_{22} [Nm]	n_{21} [r/min]	M_2 [Nm]	n_2 [r/min]	M_2 [Nm]	c	n_2 [r/min]	M_2 [Nm]	c		g500	m5□□	
395	258	3.0	39	143	160	258	395	258	3.0				3.743	-H1500	50-P160/M4	
329	310	4.4	32	172	133	310	329	310	4.4				4.496	-H3000	50-P160/M4	
311	328	2.8	31	182	126	328	311	328	2.8				4.758	-H1500	50-P160/M4	
274	372	2.7	27	206	111	372	274	372	2.7				5.400	-H1500	50-P160/M4	
250	407	4.0	25	225	102	407	250	407	4.0				5.902	-H3000	50-P160/M4	
237	431	2.6	23	238	96	431	237	431	2.6				6.245	-H1500	50-P160/M4	
233	437	4.4	23	242	95	437	233	437	4.4				6.344	-H3000	50-P160/M4	
215	473	2.4	21	262	87	473	215	473	2.4				6.864	-H1500	50-P160/M4	
212	480	4.2	21	266	86	480	212	480	4.2				6.968	-H3000	50-P160/M4	
195	524	2.3	19	290	79	524	195	524	2.3				7.592	-H1500	50-P160/M4	
178	574	3.8	17	318	72	574	178	574	3.8				8.327	-H3000	50-P160/M4	
164	621	2.1	16	344	67	621	164	621	2.1				9.010	-H1500	50-P160/M4	
162	631	3.5	16	349	66	631	162	631	3.5				9.146	-H3000	50-P160/M4	
148	690	3.3	15	382	60	690	148	690	3.3				10.005	-H3000	50-P160/M4	
144	708	2.0	14	392	58	708	144	708	2.0				10.267	-H1500	50-P160/M4	
130	783	1.8	13	433	53	783	130	783	1.8				11.356	-H1500	50-P160/M4	
127	801	3.0	13	443	52	801	127	801	3.0				11.619	-H3000	50-P160/M4	
120	852	1.7	12	472	49	852	120	852	1.7				12.362	-H1500	50-P160/M4	
116	880	2.8	11	487	47	880	116	880	2.8				12.762	-H3000	50-P160/M4	
113	903	5.4	11	497	57	903	113	903	5.4				13.073	-H5000	40-P160/M4	
108	943	1.5	11	522	44	943	108	943	1.5				13.673	-H1500	50-P160/M4	
104	981	2.6	10	543	42	981	104	981	2.6				14.233	-H3000	50-P160/M4	
102	997	5.0	10	549	51	997	102	997	5.0				14.435	-H5000	40-P160/M4	
98	1045	1.4	9.6	578	40	1045	98	1045	1.4				15.156	-H1500	50-P160/M4	
95	1078	2.4	9.3	597	38	1078	95	1078	2.4				15.633	-H3000	50-P160/M4	
90	1134	4.4	8.8	624	45	1134	90	1134	4.4				16.418	-H5000	40-P160/M4	
88	1156	1.3	8.7	640	36	1156	88	1156	1.3				16.763	-H1500	50-P160/M4	
79	1285	3.9	7.8	707	40	1285	79	1285	3.9				18.599	-H5000	40-P160/M4	
79	1293	2.1	7.7	716	32	1293	79	1293	2.1				18.752	-H3000	50-P160/M4	
76	1336	6.0	7.5	735	38	1330	76	1336	6.0	134	1330	5.0	19.333	-H8000	40-P160/M4	
72	1420	2.0	7.0	786	29	1420	72	1420	2.0				20.596	-H3000	50-P160/M4	
70	1449	3.5	6.9	797	35	1449	70	1449	3.5				20.978	-H5000	40-P160/M4	
68	1498	5.3	6.7	824	34	1492	68	1498	5.3	119	1492	4.5	21.687	-H8000	40-P160/M4	
64	1589	1.8	6.3	879	26	1589	64	1589	1.8				23.044	-H3000	50-P160/M4	
63	1617	3.1	6.2	890	32	1617	63	1617	3.1				23.410	-H5000	40-P160/M4	

Selection tables, 4-pole motors

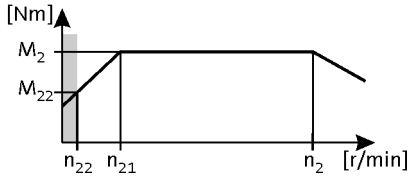

50 Hz: P_N = 11.0 kW
87 Hz: P_N = 19.2 kW

2-stage gearboxes

Mains operation 400 V, 50 Hz			Inverter operation 5 Hz -		- 20 ... 25 Hz		- 50 Hz (1:10)			- 87 Hz (1:17.4)			i	Product	
n_2 [r/min]	M_2 [Nm]	c	n_{22} [r/min]	M_{22} [Nm]	n_{21} [r/min]	M_2 [Nm]	n_2 [r/min]	M_2 [Nm]	c	n_2 [r/min]	M_2 [Nm]	c		g500	m5□□
61	1679	4.8	6.0	924	30	1672	61	1679	4.8	106	1672	4.0	24.305	-H8000	40-P160/M4
58	1745	1.7	5.7	966	24	1745	58	1745	1.7				25.311	-H3000	50-P160/M4
56	1817	2.8	5.5	1000	28	1817	56	1817	2.8				26.305	-H5000	40-P160/M4
55	1870	4.3	5.4	1028	27	1862	55	1870	4.3	96	1862	4.1	27.067	-H8000	40-P160/M4
50	2052	2.4	4.9	1129	25	2052	50	2052	2.4				29.702	-H5000	40-P160/M4
49	2099	3.8	4.8	1155	24	2091	49	2099	3.8	85	2091	3.6	30.392	-H8000	40-P160/M4
44	2315	2.2	4.3	1274	22	2306	44	2315	2.2	77	2306	2.1	33.519	-H5000	40-P160/M4
44	2317	3.5	4.3	1274	22	2307	44	2317	3.5	77	2307	3.3	33.539	-H8000	40-P160/M4
40	2525	4.8	4.0	1389	20	2515	40	2525	4.8	71	2515	4.6	36.549	-H14000	40-P160/M4
40	2566	2.0	3.9	1411	20	2556	40	2566	2.0	70	2556	1.9	37.147	-H5000	40-P160/M4
39	2638	2.9	3.8	1451	19	2627	39	2638	2.9	68	2627	2.7	38.183	-H8000	40-P160/M4
35	2889	1.7	3.5	1589	18	2877	35	2889	1.7	62	2877	1.7	41.819	-H5000	40-P160/M4
35	2914	2.6	3.4	1603	18	2902	35	2914	2.6	61	2902	2.6	42.182	-H8000	40-P160/M4
31	3245	2.3	3.1	1785	16	3232	31	3245	2.3	55	3232	2.3	46.980	-H8000	40-P160/M4
31	3259	1.5	3.1	1793	16	3246	31	3259	1.5	55	3246	1.5	47.175	-H5000	40-P160/M4
29	3476	1.4	2.9	1912	15	3462	29	3476	1.4	51	3462	1.4	50.326	-H5000	40-P160/M4
28	3650	2.1	2.7	2008	14	3636	28	3650	2.1	49	3636	2.1	52.844	-H8000	40-P160/M4
28	3694	1.4	2.7	2032	14	3679	28	3694	1.4	48	3679	1.4	53.471	-H5000	40-P160/M4
26	3912	2.0	2.6	2152	13	3896	26	3912	2.0	46	3896	2.1	56.635	-H8000	40-P160/M4
24	4316	1.2	2.3	2374	12	4298	24	4316	1.2	41	4298	1.2	62.478	-H5000	40-P160/M4

3-stage gearboxes

Mains operation 400 V, 50 Hz			Inverter operation 5 Hz -		- 20 ... 25 Hz		- 50 Hz (1:10)			- 87 Hz (1:17.4)			i	Product	
n_2 [r/min]	M_2 [Nm]	c	n_{22} [r/min]	M_{22} [Nm]	n_{21} [r/min]	M_2 [Nm]	n_2 [r/min]	M_2 [Nm]	c	n_2 [r/min]	M_2 [Nm]	c		g500	m5□□
52	1915	4.2	5.2	1053	26	1907	52	1915	4.2	92	1907	3.5	28.128	-H8000	40-P160/M4
43	2336	3.4	4.2	1285	22	2326	43	2336	3.4	75	2326	2.9	34.307	-H8000	40-P160/M4
41	2473	5.7	4.0	1361	20	2463	41	2473	5.7	71	2463	4.7	36.331	-H14000	40-P160/M4
37	2683	3.0	3.7	1476	19	2672	37	2683	3.0	66	2672	2.5	39.407	-H8000	40-P160/M4
36	2821	5.0	3.5	1552	18	2809	36	2821	5.0	62	2809	4.2	41.433	-H14000	40-P160/M4
34	2962	2.7	3.3	1629	17	2950	34	2962	2.7	59	2950	2.3	43.511	-H8000	40-P160/M4
33	3068	4.6	3.2	1687	16	3055	33	3068	4.6	57	3055	4.3	45.060	-H14000	40-P160/M4
31	3205	0.9	3.1	1773	13	3205	31	3205	0.9				47.186	-H3000	50-P160/M4
30	3339	2.4	3.0	1837	15	3326	30	3339	2.4	53	3326	2.3	49.045	-H8000	40-P160/M4
28	3652	0.8	2.7	2021	11	3652	28	3652	0.8				53.770	-H3000	50-P160/M4
26	3924	3.6	2.5	2158	13	3908	26	3924	3.6	45	3908	3.4	57.630	-H14000	40-P160/M4
25	4073	2.0	2.4	2240	12	4056	25	4073	2.0	43	4056	1.9	59.819	-H8000	40-P160/M4
24	4266	1.2	2.3	2347	12	4249	24	4266	1.2	41	4249	1.1	62.664	-H5000	40-P160/M4
22	4475	3.1	2.2	2461	11	4456	22	4475	3.1	39	4456	3.0	65.723	-H14000	40-P160/M4
22	4674	1.1	2.1	2571	11	4655	22	4674	1.1	38	4655	1.0	68.658	-H5000	40-P160/M4

Selection tables, 4-pole motors

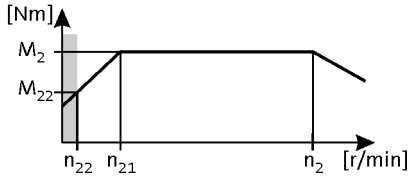

50 Hz: P_N = 11.0 kW
87 Hz: P_N = 19.2 kW

3-stage gearboxes

Mains operation 400 V, 50 Hz			Inverter operation 5 Hz -		- 20 ... 25 Hz		- 50 Hz (1:10)			- 87 Hz (1:17.4)			i	Product		
n_2 [r/min]	M_2 [Nm]	c	n_{22} [r/min]	M_{22} [Nm]	n_{21} [r/min]	M_2 [Nm]	n_2 [r/min]	M_2 [Nm]	c	n_2 [r/min]	M_2 [Nm]	c		g500	m5□□	
22	4678	1.7	2.1	2573	11	4659	22	4678	1.7	38	4659	1.6	68.712	-H8000	40-P160/M4	
19	5165	1.6	1.9	2841	9.8	5144	19	5165	1.6	34	5144	1.5	75.868	-H8000	40-P160/M4	
19	5363	0.9	1.8	2950	9.4	5342	19	5363	0.9	33	5342	0.9	78.777	-H5000	40-P160/M4	
18	5455	2.6	1.8	3000	9.2	5433	18	5455	2.6	32	5433	2.6	80.123	-H14000	40-P160/M4	
17	5875	1.4	1.7	3231	8.6	5851	17	5875	1.4	30	5851	1.4	86.290	-H8000	40-P160/M4	
16	6121	0.8	1.6	3367	8.2	6096	16	6121	0.8	29	6096	0.8	89.909	-H5000	40-P160/M4	
16	6192	2.3	1.6	3406	8.1	6167	16	6192	2.3	28	6167	2.3	90.945	-H14000	40-P160/M4	
15	6655	1.2	1.5	3661	7.6	6628	15	6655	1.2	26	6628	1.2	97.753	-H8000	40-P160/M4	
15	6744	2.1	1.5	3710	7.5	6717	15	6744	2.1	26	6717	2.1	99.061	-H14000	40-P160/M4	
13	7507	1.1	1.3	4129	6.7	7476	13	7507	1.1	23	7476	1.1	110.259	-H8000	40-P160/M4	
13	7604	1.8	1.3	4182	6.6	7573	13	7604	1.8	23	7573	1.9	111.686	-H14000	40-P160/M4	
12	8377	1.0	1.2	4608	6.0	8343	12	8377	1.0	21	8343	1.0	123.043	-H8000	40-P160/M4	
12	8529	1.6	1.2	4692	5.9	8495	12	8529	1.6	21	8495	1.7	125.283	-H14000	40-P160/M4	
11	9413	0.9	1.0	5177	5.4	9375	11	9413	0.9	19	9375	0.9	138.255	-H8000	40-P160/M4	
11	9559	1.5	1.0	5258	5.3	9520	11	9559	1.5	18	9520	1.5	140.406	-H14000	40-P160/M4	
9.4	10645	1.3	0.9	5855	4.7	10602	9.4	10645	1.3	17	10602	1.3	156.361	-H14000	40-P160/M4	
8.4	11953	1.2	0.8	6575	4.2	11905	8.4	11953	1.2	15	11905	1.2	175.571	-H14000	40-P160/M4	
7.6	13191	1.1	0.7	7256	3.8	13138	7.6	13191	1.1	13	13138	1.1	193.751	-H14000	40-P160/M4	
6.7	15017	0.9	0.7	8260	3.4	14957	6.7	15017	0.9	12	14957	0.9	220.580	-H14000	40-P160/M4	
6.1	16590	0.8	0.6	9125	3.0	16523	6.1	16590	0.8	11	16523	0.9	243.679	-H14000	40-P160/M4	

Selection tables, 4-pole motors

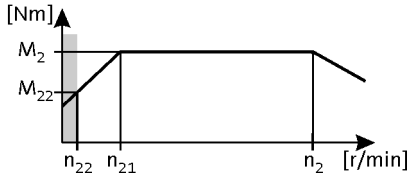

50 Hz: P_N = 15.0 kW
87 Hz: P_N = 26.3 kW

2-stage gearboxes

Mains operation 400 V, 50 Hz			Inverter operation 5 Hz -		- 20 ... 25 Hz		- 50 Hz (1:10)			- 87 Hz (1:17.4)			i	Product		
n_2 [r/min]	M_2 [Nm]	c	n_{22} [r/min]	M_{22} [Nm]	n_{21} [r/min]	M_2 [Nm]	n_2 [r/min]	M_2 [Nm]	c	n_2 [r/min]	M_2 [Nm]	c		g500	m5□□	
393	354	2.2	39	195	160	354	393	354	2.2				3.743	-H1500	50-P160/L4	
327	425	3.2	32	234	133	425	327	425	3.2				4.496	-H3000	50-P160/L4	
309	450	2.1	31	247	126	450	309	450	2.1				4.758	-H1500	50-P160/L4	
249	558	2.9	25	307	102	558	249	558	2.9				5.902	-H3000	50-P160/L4	
235	590	1.9	23	325	96	590	235	590	1.9				6.245	-H1500	50-P160/L4	
232	600	3.2	23	330	95	600	232	600	3.2				6.344	-H3000	50-P160/L4	
214	649	1.8	21	357	87	649	214	649	1.8				6.864	-H1500	50-P160/L4	
211	659	3.1	21	362	86	659	211	659	3.1				6.968	-H3000	50-P160/L4	
194	718	1.7	19	395	79	718	194	718	1.7				7.592	-H1500	50-P160/L4	
177	787	2.7	17	433	72	787	177	787	2.7				8.327	-H3000	50-P160/L4	
173	803	4.5	17	442	87	803	173	803	4.5				8.526	-H5000	40-P160/L4	
163	852	1.6	16	468	67	852	163	852	1.6				9.010	-H1500	50-P160/L4	
161	865	2.6	16	475	66	865	161	865	2.6				9.146	-H3000	50-P160/L4	
147	946	2.4	15	520	60	946	147	946	2.4				10.005	-H3000	50-P160/L4	
143	971	1.4	14	534	58	971	143	971	1.4				10.267	-H1500	50-P160/L4	
130	1074	1.3	13	590	53	1074	130	1074	1.3				11.356	-H1500	50-P160/L4	
127	1098	2.2	13	604	52	1098	127	1098	2.2				11.619	-H3000	50-P160/L4	
119	1169	1.2	12	643	49	1169	119	1169	1.2				12.362	-H1500	50-P160/L4	
115	1207	2.1	11	663	47	1207	115	1207	2.1				12.762	-H3000	50-P160/L4	
113	1231	3.9	11	677	57	1231	113	1231	3.9				13.073	-H5000	40-P160/L4	
108	1293	1.1	11	711	44	1293	108	1293	1.1				13.673	-H1500	50-P160/L4	
103	1346	1.9	10	740	42	1346	103	1346	1.9				14.233	-H3000	50-P160/L4	
102	1360	3.6	10	748	51	1360	102	1360	3.6				14.435	-H5000	40-P160/L4	
97	1433	1.0	9.6	788	40	1433	97	1433	1.0				15.156	-H1500	50-P160/L4	
94	1478	1.8	9.3	813	38	1478	94	1478	1.8				15.633	-H3000	50-P160/L4	
94	1483	5.4	9.2	816	47	1483	94	1483	5.4				15.743	-H8000	40-P160/L4	
90	1547	3.2	8.8	851	45	1547	90	1547	3.2				16.418	-H5000	40-P160/L4	
88	1585	0.9	8.7	871	36	1585	88	1585	0.9				16.763	-H1500	50-P160/L4	
86	1615	5.0	8.5	888	43	1615	86	1615	5.0				17.148	-H8000	40-P160/L4	
79	1752	2.9	7.8	964	40	1752	79	1752	2.9				18.599	-H5000	40-P160/L4	
78	1773	1.6	7.7	975	32	1773	78	1773	1.6				18.752	-H3000	50-P160/L4	
76	1821	4.4	7.5	1002	38	1821	76	1821	4.4				19.333	-H8000	40-P160/L4	
71	1947	1.5	7.0	1071	29	1947	71	1947	1.5				20.596	-H3000	50-P160/L4	
70	1976	2.5	6.9	1087	35	1976	70	1976	2.5				20.978	-H5000	40-P160/L4	
68	2043	3.9	6.7	1123	34	2043	68	2043	3.9				21.687	-H8000	40-P160/L4	

Selection tables, 4-pole motors

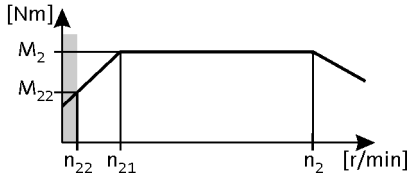

50 Hz: P_N = 15.0 kW
87 Hz: P_N = 26.3 kW

2-stage gearboxes

Mains operation 400 V, 50 Hz			Inverter operation 5 Hz -		- 20 ... 25 Hz		- 50 Hz (1:10)			- 87 Hz (1:17.4)			i	Product		
n_2 [r/min]	M_2 [Nm]	c	n_{22} [r/min]	M_{22} [Nm]	n_{21} [r/min]	M_2 [Nm]	n_2 [r/min]	M_2 [Nm]	c	n_2 [r/min]	M_2 [Nm]	c		g500	m5□□	
64	2179	1.3	6.3	1198	26	2179	64	2179	1.3				23.044	-H3000	50-P160/L4	
63	2205	2.3	6.2	1213	32	2205	63	2205	2.3				23.410	-H5000	40-P160/L4	
61	2289	3.5	6.0	1259	30	2289	61	2289	3.5	106	2290	2.9	24.305	-H8000	40-P160/L4	
58	2393	1.2	5.7	1316	24	2393	58	2393	1.2				25.311	-H3000	50-P160/L4	
56	2478	2.0	5.5	1363	28	2478	56	2478	2.0				26.305	-H5000	40-P160/L4	
56	2503	5.6	5.5	1377	28	2503	56	2503	5.6				26.571	-H14000	40-P160/L4	
55	2550	3.1	5.4	1402	27	2550	55	2550	3.1	96	2551	3.0	27.067	-H8000	40-P160/L4	
50	2768	5.1	4.9	1522	25	2768	50	2768	5.1				29.384	-H14000	40-P160/L4	
50	2798	1.8	4.9	1539	25	2798	50	2798	1.8				29.702	-H5000	40-P160/L4	
49	2863	2.8	4.8	1574	24	2863	49	2863	2.8	85	2864	2.7	30.392	-H8000	40-P160/L4	
45	3097	4.5	4.4	1703	23	3097	45	3097	4.5	79	3099	4.3	32.881	-H14000	40-P160/L4	
44	3157	1.6	4.3	1736	22	3157	44	3157	1.6				33.519	-H5000	40-P160/L4	
44	3159	2.5	4.3	1737	22	3159	44	3159	2.5	77	3161	2.4	33.539	-H8000	40-P160/L4	
40	3443	3.5	4.0	1893	20	3443	40	3443	3.5	71	3444	3.3	36.549	-H14000	40-P160/L4	
40	3499	1.4	3.9	1924	20	3499	40	3499	1.4	70	3501	1.4	37.147	-H5000	40-P160/L4	
39	3597	2.1	3.8	1978	19	3597	39	3597	2.1	68	3598	2.0	38.183	-H8000	40-P160/L4	
35	3939	1.3	3.5	2166	18	3939	35	3939	1.3	62	3941	1.3	41.819	-H5000	40-P160/L4	
35	3973	1.9	3.4	2185	18	3973	35	3973	1.9	61	3975	1.9	42.182	-H8000	40-P160/L4	
31	4425	1.7	3.1	2434	16	4425	31	4425	1.7	55	4427	1.7	46.980	-H8000	40-P160/L4	
31	4444	1.1	3.1	2444	16	4444	31	4444	1.1	55	4446	1.1	47.175	-H5000	40-P160/L4	
29	4741	1.1	2.9	2607	15	4741	29	4741	1.1	51	4743	1.1	50.326	-H5000	40-P160/L4	
28	4978	1.6	2.7	2738	14	4978	28	4978	1.6	49	4980	1.6	52.844	-H8000	40-P160/L4	
28	5037	1.0	2.7	2770	14	5037	28	5037	1.0	48	5039	1.0	53.471	-H5000	40-P160/L4	
26	5335	1.5	2.6	2934	13	5335	26	5335	1.5	46	5337	1.5	56.635	-H8000	40-P160/L4	
24	5885	0.9	2.3	3237	12	5885	24	5885	0.9	41	5888	0.9	62.478	-H5000	40-P160/L4	

3-stage gearboxes

Mains operation 400 V, 50 Hz			Inverter operation 5 Hz -		- 20 ... 25 Hz		- 50 Hz (1:10)			- 87 Hz (1:17.4)			i	Product		
n_2 [r/min]	M_2 [Nm]	c	n_{22} [r/min]	M_{22} [Nm]	n_{21} [r/min]	M_2 [Nm]	n_2 [r/min]	M_2 [Nm]	c	n_2 [r/min]	M_2 [Nm]	c		g500	m5□□	
52	2611	3.1	5.2	1436	26	2611	52	2611	3.1				28.128	-H8000	40-P160/L4	
52	2637	5.3	5.1	1450	26	2637	52	2637	5.3				28.406	-H14000	40-P160/L4	
43	3185	2.5	4.2	1752	22	3185	43	3185	2.5	75	3186	2.1	34.307	-H8000	40-P160/L4	
41	3373	4.2	4.0	1855	20	3373	41	3373	4.2				36.331	-H14000	40-P160/L4	
37	3659	2.2	3.7	2012	19	3659	37	3659	2.2	66	3660	1.8	39.407	-H8000	40-P160/L4	
36	3847	3.6	3.5	2115	18	3847	36	3847	3.6				41.433	-H14000	40-P160/L4	
34	4040	2.0	3.3	2222	17	4040	34	4040	2.0	59	4041	1.7	43.511	-H8000	40-P160/L4	
33	4183	3.4	3.2	2301	16	4183	33	4183	3.4				45.060	-H14000	40-P160/L4	
30	4553	1.8	3.0	2504	15	4553	30	4553	1.8	53	4555	1.7	49.045	-H8000	40-P160/L4	
26	5350	2.6	2.5	2942	13	5350	26	5350	2.6	45	5353	2.5	57.630	-H14000	40-P160/L4	

Selection tables, 4-pole motors

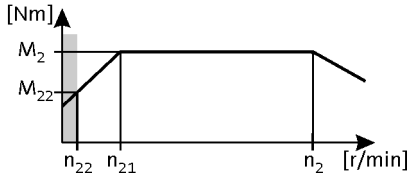

50 Hz: P_N = 15.0 kW
87 Hz: P_N = 26.3 kW

3-stage gearboxes

Mains operation 400 V, 50 Hz			Inverter operation 5 Hz -		- 20 ... 25 Hz		- 50 Hz (1:10)			- 87 Hz (1:17.4)			i	Product		
n_2 [r/min]	M_2 [Nm]	c	n_{22} [r/min]	M_{22} [Nm]	n_{21} [r/min]	M_2 [Nm]	n_2 [r/min]	M_2 [Nm]	c	n_2 [r/min]	M_2 [Nm]	c		g500	m5□□	
25	5554	1.4	2.4	3054	12	5554	25	5554	1.4	43	5556	1.4	59.819	-H8000	40-P160/L4	
24	5818	0.9	2.3	3199	12	5818	24	5818	0.9	41	5820	0.8	62.664	-H5000	40-P160/L4	
22	6102	2.3	2.2	3356	11	6102	22	6102	2.3	39	6104	2.2	65.723	-H14000	40-P160/L4	
22	6379	1.3	2.1	3508	11	6379	22	6379	1.3	38	6382	1.2	68.712	-H8000	40-P160/L4	
19	7044	1.1	1.9	3874	9.8	7044	19	7044	1.1	34	7047	1.1	75.868	-H8000	40-P160/L4	
18	7438	1.9	1.8	4091	9.2	7438	18	7438	1.9	32	7442	1.9	80.123	-H14000	40-P160/L4	
17	8011	1.0	1.7	4406	8.6	8011	17	8011	1.0	30	8015	1.0	86.290	-H8000	40-P160/L4	
16	8443	1.7	1.6	4643	8.1	8443	16	8443	1.7	28	8447	1.7	90.945	-H14000	40-P160/L4	
15	9075	0.9	1.5	4991	7.6	9075	15	9075	0.9	26	9079	0.9	97.753	-H8000	40-P160/L4	
15	9197	1.5	1.5	5058	7.5	9197	15	9197	1.5	26	9201	1.5	99.061	-H14000	40-P160/L4	
13	10369	1.4	1.3	5702	6.6	10369	13	10369	1.4	23	10373	1.4	111.686	-H14000	40-P160/L4	
12	11631	1.2	1.2	6396	5.9	11631	12	11631	1.2	21	11636	1.2	125.283	-H14000	40-P160/L4	
11	13035	1.1	1.0	7168	5.3	13035	11	13035	1.1	18	13041	1.1	140.406	-H14000	40-P160/L4	
9.4	14516	1.0	0.9	7983	4.7	14516	9.4	14516	1.0	17	14523	1.0	156.361	-H14000	40-P160/L4	
8.4	16300	0.9	0.8	8964	4.2	16300	8.4	16300	0.9	15	16307	0.9	175.571	-H14000	40-P160/L4	

Selection tables, 4-pole motors

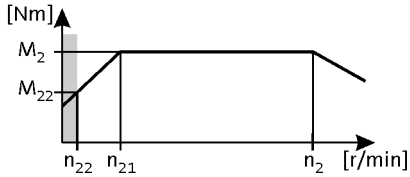

50 Hz: P_N = 18.5 kW
87 Hz: P_N = 32.2 kW

2-stage gearboxes

Mains operation 400 V, 50 Hz			Inverter operation 5 Hz -		- 20 ... 25 Hz		- 50 Hz (1:10)			- 87 Hz (1:17.4)			i	Product		
n_2 [r/min]	M_2 [Nm]	c	n_{22} [r/min]	M_{22} [Nm]	n_{21} [r/min]	M_2 [Nm]	n_2 [r/min]	M_2 [Nm]	c	n_2 [r/min]	M_2 [Nm]	c		g500	m5□□	
251	682	2.4	25	377	102	682	251	682	2.4				5.902	-H3000	50-P180/M4	
238	722	1.5	23	399	96	722	238	722	1.5				6.245	-H1500	50-P180/M4	
202	847	5.8	20	466	101	847	202	847	5.8				7.270	-H8000	40-P180/M4	
178	962	2.2	17	532	72	962	178	962	2.2				8.327	-H3000	50-P180/M4	
162	1057	2.1	16	585	66	1057	162	1057	2.1				9.146	-H3000	50-P180/M4	
148	1156	2.0	15	640	60	1156	148	1156	2.0				10.005	-H3000	50-P180/M4	
144	1187	1.2	14	656	58	1187	144	1187	1.2				10.267	-H1500	50-P180/M4	
128	1343	1.8	13	743	52	1343	128	1343	1.8				11.619	-H3000	50-P180/M4	
120	1429	1.0	12	790	49	1429	120	1429	1.0				12.362	-H1500	50-P180/M4	
116	1475	1.7	11	816	47	1475	116	1475	1.7				12.762	-H3000	50-P180/M4	
106	1617	5.0	11	889	53	1617	106	1617	5.0				13.870	-H8000	40-P180/M4	
104	1645	1.5	10	910	42	1645	104	1645	1.5				14.233	-H3000	50-P180/M4	
102	1683	2.9	10	926	51	1683	102	1683	2.9				14.435	-H5000	40-P180/M4	
98	1752	0.8	9.6	969	40	1752	98	1752	0.8				15.156	-H1500	50-P180/M4	
95	1807	1.4	9.3	999	38	1807	95	1807	1.4				15.633	-H3000	50-P180/M4	
93	1835	4.4	9.2	1010	47	1835	93	1835	4.4				15.743	-H8000	40-P180/M4	
90	1914	2.6	8.8	1053	45	1914	90	1914	2.6				16.418	-H5000	40-P180/M4	
86	1999	4.0	8.5	1100	43	1999	86	1999	4.0				17.148	-H8000	40-P180/M4	
79	2168	2.3	7.8	1193	40	2168	79	2168	2.3				18.599	-H5000	40-P180/M4	
79	2167	1.3	7.7	1199	32	2167	79	2167	1.3				18.752	-H3000	50-P180/M4	
76	2254	3.6	7.5	1240	38	2254	76	2254	3.6				19.333	-H8000	40-P180/M4	
72	2380	1.2	7.0	1317	29	2380	72	2380	1.2				20.596	-H3000	50-P180/M4	
70	2436	5.8	6.9	1340	35	2436	70	2436	5.8				20.896	-H14000	40-P180/M4	
70	2445	2.0	6.9	1345	35	2445	70	2445	2.0				20.978	-H5000	40-P180/M4	
68	2528	3.2	6.7	1391	34	2528	68	2528	3.2				21.687	-H8000	40-P180/M4	
64	2663	1.1	6.3	1473	26	2663	64	2663	1.1				23.044	-H3000	50-P180/M4	
63	2729	1.8	6.2	1501	31	2729	63	2729	1.8				23.410	-H5000	40-P180/M4	
63	2734	5.1	6.2	1504	31	2734	63	2734	5.1				23.451	-H14000	40-P180/M4	
61	2833	2.8	6.0	1559	30	2833	61	2833	2.8				24.305	-H8000	40-P180/M4	
59	2925	1.0	5.7	1618	24	2925	59	2925	1.0				25.311	-H3000	50-P180/M4	
56	3066	1.6	5.5	1687	28	3066	56	3066	1.6				26.305	-H5000	40-P180/M4	
55	3097	4.5	5.5	1704	28	3097	55	3097	4.5				26.571	-H14000	40-P180/M4	
54	3155	2.5	5.4	1736	27	3129	54	3155	2.5	95	3129	2.4	27.067	-H8000	40-P180/M4	
50	3425	4.1	4.9	1884	25	3425	50	3425	4.1				29.384	-H14000	40-P180/M4	
48	3543	2.3	4.8	1949	24	3513	48	3543	2.3	85	3513	2.2	30.392	-H8000	40-P180/M4	

Selection tables, 4-pole motors

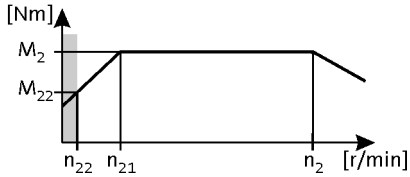

50 Hz: P_N = 18.5 kW
87 Hz: P_N = 32.2 kW

2-stage gearboxes

Mains operation 400 V, 50 Hz			Inverter operation 5 Hz -		- 20 ... 25 Hz		- 50 Hz (1:10)			- 87 Hz (1:17.4)			i	Product		
n_2 [r/min]	M_2 [Nm]	c	n_{22} [r/min]	M_{22} [Nm]	n_{21} [r/min]	M_2 [Nm]	n_2 [r/min]	M_2 [Nm]	c	n_2 [r/min]	M_2 [Nm]	c		g500	m5□□	
45	3833	3.7	4.4	2109	22	3833	45	3833	3.7				32.881	-H14000	40-P180/M4	
40	4261	2.8	4.0	2344	20	4225	40	4261	2.8	71	4225	2.7	36.549	-H14000	40-P180/M4	

3-stage gearboxes

Mains operation 400 V, 50 Hz			Inverter operation 5 Hz -		- 20 ... 25 Hz		- 50 Hz (1:10)			- 87 Hz (1:17.4)			i	Product		
n_2 [r/min]	M_2 [Nm]	c	n_{22} [r/min]	M_{22} [Nm]	n_{21} [r/min]	M_2 [Nm]	n_2 [r/min]	M_2 [Nm]	c	n_2 [r/min]	M_2 [Nm]	c		g500	m5□□	
52	3232	2.5	5.2	1778	26	3232	52	3232	2.5				28.128	-H8000	40-P180/M4	
52	3264	4.3	5.1	1795	26	3264	52	3264	4.3				28.406	-H14000	40-P180/M4	
43	3942	2.0	4.2	2168	21	3909	43	3942	2.0	75	3909	1.7	34.307	-H8000	40-P180/M4	
41	4174	3.4	4.0	2296	20	4174	41	4174	3.4				36.331	-H14000	40-P180/M4	
37	4528	1.8	3.7	2491	19	4490	37	4528	1.8	66	4490	1.5	39.407	-H8000	40-P180/M4	
36	4760	2.9	3.5	2619	18	4760	36	4760	2.9				41.433	-H14000	40-P180/M4	
34	4999	1.6	3.3	2750	17	4958	34	4999	1.6	59	4958	1.4	43.511	-H8000	40-P180/M4	
33	5177	2.7	3.2	2848	16	5177	33	5177	2.7				45.060	-H14000	40-P180/M4	
30	5635	1.4	3.0	3100	15	5588	30	5635	1.4	53	5588	1.4	49.045	-H8000	40-P180/M4	
26	6621	2.1	2.5	3642	13	6621	26	6621	2.1				57.630	-H14000	40-P180/M4	
25	6873	1.2	2.4	3781	12	6816	25	6873	1.2	43	6816	1.1	59.819	-H8000	40-P180/M4	
22	7551	1.9	2.2	4154	11	7488	22	7551	1.9	39	7488	1.8	65.723	-H14000	40-P180/M4	
21	7894	1.0	2.1	4343	11	7829	21	7894	1.0	38	7829	1.0	68.712	-H8000	40-P180/M4	
19	8717	0.9	1.9	4795	9.7	8644	19	8717	0.9	34	8644	0.9	75.868	-H8000	40-P180/M4	
18	9205	1.5	1.8	5064	9.2	9129	18	9205	1.5	32	9129	1.5	80.123	-H14000	40-P180/M4	
17	9914	0.8	1.7	5454	8.5	9832	17	9914	0.8	30	9832	0.8	86.290	-H8000	40-P180/M4	
16	10449	1.3	1.6	5748	8.1	10362	16	10449	1.3	28	10362	1.4	90.945	-H14000	40-P180/M4	
15	11381	1.2	1.5	6261	7.4	11287	15	11381	1.2	26	11287	1.2	99.061	-H14000	40-P180/M4	
13	12832	1.1	1.3	7059	6.6	12725	13	12832	1.1	23	12725	1.1	111.686	-H14000	40-P180/M4	
12	14394	1.0	1.2	7918	5.9	14274	12	14394	1.0	21	14274	1.0	125.283	-H14000	40-P180/M4	
11	16131	0.9	1.0	8874	5.2	15997	11	16131	0.9	18	15997	0.9	140.406	-H14000	40-P180/M4	

Selection tables, 4-pole motors

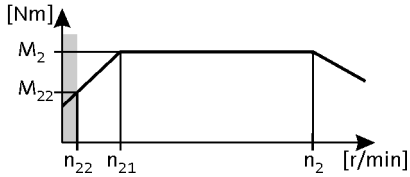

50 Hz: P_N = 22.0 kW
87 Hz: P_N = 38.5 kW

2-stage gearboxes

Mains operation 400 V, 50 Hz			Inverter operation 5 Hz -		- 20 ... 25 Hz		- 50 Hz (1:10)			- 87 Hz (1:17.4)			i	Product		
n_2 [r/min]	M_2 [Nm]	c	n_{22} [r/min]	M_{22} [Nm]	n_{21} [r/min]	M_2 [Nm]	n_2 [r/min]	M_2 [Nm]	c	n_2 [r/min]	M_2 [Nm]	c		g500	m5□□	
251	813	2.0	25	450	102	813	251	813	2.0				5.902	-H3000	50-P180/L4	
247	827	5.9	24	455	123	827	247	827	5.9				5.963	-H8000	40-P180/L4	
202	1008	4.8	20	554	101	1008	202	1008	4.8				7.270	-H8000	40-P180/L4	
178	1147	1.9	17	635	72	1147	178	1147	1.9				8.327	-H3000	50-P180/L4	
129	1577	5.1	13	867	65	1577	129	1577	5.1				11.377	-H8000	40-P180/L4	
127	1600	1.5	13	886	52	1600	127	1600	1.5				11.619	-H3000	50-P180/L4	
116	1758	1.4	11	973	47	1758	116	1758	1.4				12.762	-H3000	50-P180/L4	
106	1923	4.2	11	1057	53	1923	106	1923	4.2				13.870	-H8000	40-P180/L4	
104	1960	1.3	10	1085	42	1960	104	1960	1.3				14.233	-H3000	50-P180/L4	
95	2153	1.2	9.3	1192	38	2153	95	2153	1.2				15.633	-H3000	50-P180/L4	
93	2182	3.7	9.2	1200	47	2182	93	2182	3.7				15.743	-H8000	40-P180/L4	
90	2276	2.2	8.8	1252	45	2276	90	2276	2.2				16.418	-H5000	40-P180/L4	
86	2360	5.9	8.5	1298	43	2360	86	2360	5.9				17.026	-H14000	40-P180/L4	
86	2377	3.4	8.5	1307	43	2377	86	2377	3.4				17.148	-H8000	40-P180/L4	
79	2578	1.9	7.8	1418	40	2578	79	2578	1.9				18.599	-H5000	40-P180/L4	
79	2583	1.1	7.7	1430	32	2583	79	2583	1.1				18.752	-H3000	50-P180/L4	
78	2624	5.3	7.7	1443	39	2624	78	2624	5.3				18.930	-H14000	40-P180/L4	
76	2680	3.0	7.5	1474	38	2680	76	2680	3.0				19.333	-H8000	40-P180/L4	
72	2837	1.0	7.0	1571	29	2837	72	2837	1.0				20.596	-H3000	50-P180/L4	
70	2897	4.8	6.9	1593	35	2897	70	2897	4.8				20.896	-H14000	40-P180/L4	
70	2908	1.7	6.9	1599	35	2908	70	2908	1.7				20.978	-H5000	40-P180/L4	
68	3006	2.7	6.7	1653	34	3006	68	3006	2.7				21.687	-H8000	40-P180/L4	
64	3174	0.9	6.3	1757	26	3174	64	3174	0.9				23.044	-H3000	50-P180/L4	
63	3245	1.5	6.2	1785	31	3245	63	3245	1.5				23.410	-H5000	40-P180/L4	
63	3251	4.3	6.2	1788	31	3251	63	3251	4.3				23.451	-H14000	40-P180/L4	
61	3369	2.4	6.0	1853	30	3369	61	3369	2.4				24.305	-H8000	40-P180/L4	
59	3486	0.9	5.7	1930	24	3486	59	3486	0.9				25.311	-H3000	50-P180/L4	
56	3647	1.4	5.5	2005	28	3647	56	3647	1.4				26.305	-H5000	40-P180/L4	
55	3683	3.8	5.5	2026	28	3683	55	3683	3.8				26.571	-H14000	40-P180/L4	
54	3752	2.1	5.4	2064	27	3741	54	3752	2.1	95	3741	2.0	27.067	-H8000	40-P180/L4	
50	4073	3.4	4.9	2240	25	4073	50	4073	3.4				29.384	-H14000	40-P180/L4	
48	4213	1.9	4.8	2317	24	4201	48	4213	1.9	85	4201	1.8	30.392	-H8000	40-P180/L4	
45	4558	3.1	4.4	2507	22	4558	45	4558	3.1				32.881	-H14000	40-P180/L4	
40	5067	2.4	4.0	2786	20	5052	40	5067	2.4	71	5052	2.3	36.549	-H14000	40-P180/L4	

Selection tables, 4-pole motors

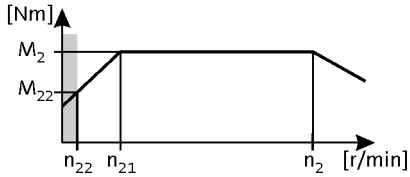

50 Hz: P_N = 22.0 kW
87 Hz: P_N = 38.5 kW

3-stage gearboxes

Mains operation 400 V, 50 Hz			Inverter operation 5 Hz -		- 20 ... 25 Hz		- 50 Hz (1:10)			- 87 Hz (1:17.4)			i	Product		
n_2 [r/min]	M_2 [Nm]	c	n_{22} [r/min]	M_{22} [Nm]	n_{21} [r/min]	M_2 [Nm]	n_2 [r/min]	M_2 [Nm]	c	n_2 [r/min]	M_2 [Nm]	c		g500	m5□□	
52	3843	2.1	5.2	2113	26	3843	52	3843	2.1				28.128	-H8000	40-P180/L4	
52	3881	3.6	5.1	2134	26	3881	52	3881	3.6				28.406	-H14000	40-P180/L4	
43	4687	1.7	4.2	2578	21	4674	43	4687	1.7	75	4674	1.4	34.307	-H8000	40-P180/L4	
41	4964	2.8	4.0	2730	20	4964	41	4964	2.8				36.331	-H14000	40-P180/L4	
37	5384	1.5	3.7	2961	19	5368	37	5384	1.5	66	5368	1.2	39.407	-H8000	40-P180/L4	
36	5661	2.5	3.5	3113	18	5661	36	5661	2.5				41.433	-H14000	40-P180/L4	
34	5945	1.4	3.3	3269	17	5928	34	5945	1.4	59	5928	1.1	43.511	-H8000	40-P180/L4	
33	6156	2.3	3.2	3386	16	6156	33	6156	2.3				45.060	-H14000	40-P180/L4	
30	6701	1.2	3.0	3685	15	6681	30	6701	1.2	53	6681	1.1	49.045	-H8000	40-P180/L4	
26	7874	1.8	2.5	4330	13	7874	26	7874	1.8				57.630	-H14000	40-P180/L4	
25	8173	1.0	2.4	4495	12	8149	25	8173	1.0	43	8149	0.9	59.819	-H8000	40-P180/L4	
22	8980	1.6	2.2	4938	11	8980	22	8980	1.6				65.723	-H14000	40-P180/L4	
21	9388	0.9	2.1	5163	11	9361	21	9388	0.9	38	9361	0.8	68.712	-H8000	40-P180/L4	
18	10947	1.3	1.8	6020	9.2	10947	18	10947	1.3				80.123	-H14000	40-P180/L4	
16	12425	1.1	1.6	6833	8.1	12425	16	12425	1.1				90.945	-H14000	40-P180/L4	
15	13534	1.0	1.5	7443	7.4	13495	15	13534	1.0	26	13495	1.0	99.061	-H14000	40-P180/L4	
13	15259	0.9	1.3	8392	6.6	15215	13	15259	0.9	23	15215	0.9	111.686	-H14000	40-P180/L4	
12	17117	0.8	1.2	9413	5.9	17067	12	17117	0.8	21	17067	0.8	125.283	-H14000	40-P180/L4	

Selection tables, 4-pole motors

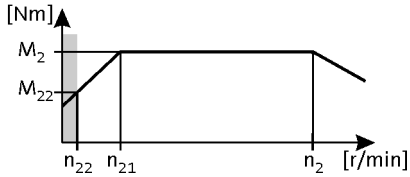

50 Hz: P_N = 30.0 kW
87 Hz: P_N = 52.5 kW

2-stage gearboxes

Mains operation 400 V, 50 Hz			Inverter operation 5 Hz -		- 20 ... 25 Hz		- 50 Hz (1:10)			- 87 Hz (1:17.4)			i	Product		
n_2 [r/min]	M_2 [Nm]	c	n_{22} [r/min]	M_{22} [Nm]	n_{21} [r/min]	M_2 [Nm]	n_2 [r/min]	M_2 [Nm]	c	n_2 [r/min]	M_2 [Nm]	c		g500	m5□□	
281	988	4.9	28	544	141	988	281	988	4.9				5.229	-H8000	40-P200/M4	
247	1127	4.3	24	620	123	1127	247	1127	4.3				5.963	-H8000	40-P200/M4	
202	1374	3.6	20	756	101	1374	202	1374	3.6				7.270	-H8000	40-P200/M4	
199	1394	5.7	20	767	100	1394	199	1394	5.7				7.374	-H14000	40-P200/M4	
129	2151	3.7	13	1183	65	2151	129	2151	3.7				11.377	-H8000	40-P200/M4	
106	2622	3.1	11	1442	53	2622	106	2622	3.1				13.870	-H8000	40-P200/M4	
93	2976	2.7	9.2	1637	47	2976	93	2976	2.7				15.743	-H8000	40-P200/M4	
86	3219	4.4	8.5	1770	43	3219	86	3219	4.4				17.026	-H14000	40-P200/M4	
86	3242	2.5	8.5	1783	43	3242	86	3242	2.5				17.148	-H8000	40-P200/M4	
79	3516	1.4	7.8	1934	40	3516	79	3516	1.4				18.599	-H5000	40-P200/M4	
78	3579	3.9	7.7	1968	39	3579	78	3579	3.9				18.930	-H14000	40-P200/M4	
76	3655	2.2	7.5	2010	38	3655	76	3655	2.2				19.333	-H8000	40-P200/M4	
70	3950	3.5	6.9	2173	35	3950	70	3950	3.5				20.896	-H14000	40-P200/M4	
70	3966	1.3	6.9	2181	35	3966	70	3966	1.3				20.978	-H5000	40-P200/M4	
68	4100	2.0	6.7	2255	34	4100	68	4100	2.0				21.687	-H8000	40-P200/M4	
63	4425	1.1	6.2	2434	31	4425	63	4425	1.1				23.410	-H5000	40-P200/M4	
63	4433	3.2	6.2	2438	31	4433	63	4433	3.2				23.451	-H14000	40-P200/M4	
61	4595	1.7	6.0	2527	30	4595	61	4595	1.7				24.305	-H8000	40-P200/M4	
55	5023	2.8	5.5	2763	28	5023	55	5023	2.8				26.571	-H14000	40-P200/M4	
54	5117	1.6	5.4	2814	27	5102	54	5117	1.6	95	5102	1.5	27.067	-H8000	40-P200/M4	
50	5555	2.5	4.9	3055	25	5555	50	5555	2.5				29.384	-H14000	40-P200/M4	
45	6216	2.3	4.4	3419	22	6216	45	6216	2.3				32.881	-H14000	40-P200/M4	

3-stage gearboxes

Mains operation 400 V, 50 Hz			Inverter operation 5 Hz -		- 20 ... 25 Hz		- 50 Hz (1:10)			- 87 Hz (1:17.4)			i	Product		
n_2 [r/min]	M_2 [Nm]	c	n_{22} [r/min]	M_{22} [Nm]	n_{21} [r/min]	M_2 [Nm]	n_2 [r/min]	M_2 [Nm]	c	n_2 [r/min]	M_2 [Nm]	c		g500	m5□□	
52	5240	1.5	5.2	2883	26	5240	52	5240	1.5				28.128	-H8000	40-P200/M4	
43	6392	1.3	4.2	3516	21	6392	43	6392	1.3				34.307	-H8000	40-P200/M4	
41	6769	2.1	4.0	3723	20	6769	41	6769	2.1				36.331	-H14000	40-P200/M4	
37	7342	1.1	3.7	4038	19	7321	37	7342	1.1	66	7321	0.9	39.407	-H8000	40-P200/M4	
36	7719	1.8	3.5	4246	18	7719	36	7719	1.8				41.433	-H14000	40-P200/M4	
34	8107	1.0	3.3	4459	17	8083	34	8107	1.0	59	8083	0.8	43.511	-H8000	40-P200/M4	
33	8395	1.7	3.2	4618	16	8395	33	8395	1.7				45.060	-H14000	40-P200/M4	
30	9138	0.9	3.0	5026	15	9111	30	9138	0.9	53	9111	0.8	49.045	-H8000	40-P200/M4	
26	10737	1.3	2.5	5906	13	10737	26	10737	1.3				57.630	-H14000	40-P200/M4	
22	12245	1.1	2.2	6735	11	12245	22	12245	1.1				65.723	-H14000	40-P200/M4	
18	14928	0.9	1.8	8211	9.2	14928	18	14928	0.9				80.123	-H14000	40-P200/M4	
16	16944	0.8	1.6	9320	8.1	16944	16	16944	0.8				90.945	-H14000	40-P200/M4	

Selection tables, 4-pole motors

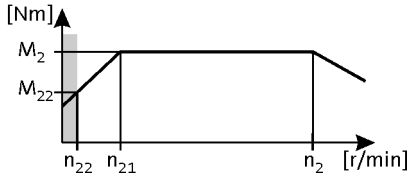

50 Hz: P_N = 37.0 kW
87 Hz: P_N = 64.8 kW

2-stage gearboxes

Mains operation 400 V, 50 Hz			Inverter operation 5 Hz -		- 20 ... 25 Hz		- 50 Hz (1:10)			- 87 Hz (1:17.4)			i	Product		
n_2 [r/min]	M_2 [Nm]	c	n_{22} [r/min]	M_{22} [Nm]	n_{21} [r/min]	M_2 [Nm]	n_2 [r/min]	M_2 [Nm]	c	n_2 [r/min]	M_2 [Nm]	c		g500	m5□□	
248	1383	3.5	24	758	124	1383	248	1383	3.5				5.963	-H8000	40-P225/M4	
203	1686	2.9	20	924	102	1686	203	1686	2.9				7.270	-H8000	40-P225/M4	
200	1710	4.7	20	937	100	1710	200	1710	4.7				7.374	-H14000	40-P225/M4	
107	3216	2.5	11	1762	53	3216	107	3216	2.5				13.870	-H8000	40-P225/M4	
94	3651	2.2	9.2	2000	47	3651	94	3651	2.2				15.743	-H8000	40-P225/M4	
86	3976	2.0	8.5	2179	43	3976	86	3976	2.0				17.148	-H8000	40-P225/M4	
80	4313	1.2	7.8	2363	40	4313	80	4313	1.2				18.599	-H5000	40-P225/M4	
76	4483	1.8	7.5	2457	38	4483	76	4483	1.8				19.333	-H8000	40-P225/M4	
71	4845	2.9	6.9	2655	35	4845	71	4845	2.9				20.896	-H14000	40-P225/M4	
71	4864	1.0	6.9	2666	35	4864	71	4864	1.0				20.978	-H5000	40-P225/M4	
68	5029	1.6	6.7	2756	34	5029	68	5029	1.6				21.687	-H8000	40-P225/M4	
63	5438	2.6	6.2	2980	32	5438	63	5438	2.6				23.451	-H14000	40-P225/M4	
61	5636	1.4	6.0	3088	30	5636	61	5636	1.4				24.305	-H8000	40-P225/M4	
56	6161	2.3	5.5	3376	28	6161	56	6161	2.3				26.571	-H14000	40-P225/M4	
50	6814	2.1	4.9	3734	25	6814	50	6814	2.1				29.384	-H14000	40-P225/M4	

3-stage gearboxes

Mains operation 400 V, 50 Hz			Inverter operation 5 Hz -		- 20 ... 25 Hz		- 50 Hz (1:10)			- 87 Hz (1:17.4)			i	Product		
n_2 [r/min]	M_2 [Nm]	c	n_{22} [r/min]	M_{22} [Nm]	n_{21} [r/min]	M_2 [Nm]	n_2 [r/min]	M_2 [Nm]	c	n_2 [r/min]	M_2 [Nm]	c		g500	m5□□	
53	6428	1.2	5.2	3523	26	6428	53	6428	1.2				28.128	-H8000	40-P225/M4	
43	7840	1.0	4.2	4297	22	7840	43	7840	1.0				34.307	-H8000	40-P225/M4	
41	8303	1.7	4.0	4550	20	8303	41	8303	1.7				36.331	-H14000	40-P225/M4	
38	9006	0.9	3.7	4935	19	9006	38	9006	0.9				39.407	-H8000	40-P225/M4	
36	9469	1.5	3.5	5189	18	9469	36	9469	1.5				41.433	-H14000	40-P225/M4	
33	10298	1.4	3.2	5643	16	10298	33	10298	1.4				45.060	-H14000	40-P225/M4	
26	13171	1.1	2.5	7217	13	13171	26	13171	1.1				57.630	-H14000	40-P225/M4	
23	15020	0.9	2.2	8231	11	15020	23	15020	0.9				65.723	-H14000	40-P225/M4	

Selection tables, 4-pole motors

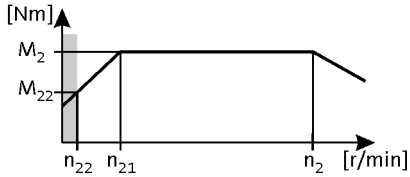

50 Hz: P_N = 45.0 kW
87 Hz: P_N = 78.7 kW

2-stage gearboxes

Mains operation 400 V, 50 Hz			Inverter operation 5 Hz -		- 20 ... 25 Hz		- 50 Hz (1:10)			- 87 Hz (1:17.4)			i	Product		
n_2 [r/min]	M_2 [Nm]	c	n_{22} [r/min]	M_{22} [Nm]	n_{21} [r/min]	M_2 [Nm]	n_2 [r/min]	M_2 [Nm]	c	n_2 [r/min]	M_2 [Nm]	c		g500	m5□□	
248	1682	2.9	24	926	124	1682	248	1682	2.9				5.963	-H8000	40-P225/L4	
203	2050	2.4	20	1128	102	2050	203	2050	2.4				7.270	-H8000	40-P225/L4	
94	4440	1.8	9.2	2443	47	4440	94	4440	1.8				15.743	-H8000	40-P225/L4	
86	4836	1.7	8.5	2661	43	4836	86	4836	1.7				17.148	-H8000	40-P225/L4	
80	5245	1.0	7.8	2887	40	5245	80	5245	1.0				18.599	-H5000	40-P225/L4	
76	5452	1.5	7.5	3001	38	5452	76	5452	1.5				19.333	-H8000	40-P225/L4	
71	5916	0.9	6.9	3256	35	5916	71	5916	0.9				20.978	-H5000	40-P225/L4	
68	6116	1.3	6.7	3366	34	6116	68	6116	1.3				21.687	-H8000	40-P225/L4	
63	6614	2.1	6.2	3640	32	6614	63	6614	2.1				23.451	-H14000	40-P225/L4	
61	6854	1.2	6.0	3772	30	6854	61	6854	1.2				24.305	-H8000	40-P225/L4	
56	7494	1.9	5.5	4124	28	7494	56	7494	1.9				26.571	-H14000	40-P225/L4	
50	8287	1.7	4.9	4560	25	8287	50	8287	1.7				29.384	-H14000	40-P225/L4	

3-stage gearboxes

Mains operation 400 V, 50 Hz			Inverter operation 5 Hz -		- 20 ... 25 Hz		- 50 Hz (1:10)			- 87 Hz (1:17.4)			i	Product		
n_2 [r/min]	M_2 [Nm]	c	n_{22} [r/min]	M_{22} [Nm]	n_{21} [r/min]	M_2 [Nm]	n_2 [r/min]	M_2 [Nm]	c	n_2 [r/min]	M_2 [Nm]	c		g500	m5□□	
53	7818	1.0	5.2	4303	26	7818	53	7818	1.0				28.128	-H8000	40-P225/L4	
43	9536	0.8	4.2	5248	22	9536	43	9536	0.8				34.307	-H8000	40-P225/L4	
41	10098	1.4	4.0	5557	20	10098	41	10098	1.4				36.331	-H14000	40-P225/L4	
36	11516	1.2	3.5	6338	18	11516	36	11516	1.2				41.433	-H14000	40-P225/L4	
33	12524	1.1	3.2	6892	16	12524	33	12524	1.1				45.060	-H14000	40-P225/L4	
26	16018	0.9	2.5	8815	13	16018	26	16018	0.9				57.630	-H14000	40-P225/L4	

Selection tables, 4-pole motors

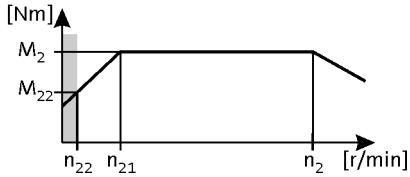

50 Hz: P_N = 55.0 kW
87 Hz: P_N = 87.0 kW

2-stage gearboxes

Mains operation 400 V, 50 Hz			Inverter operation 5 Hz -		- 20 ... 25 Hz		- 50 Hz (1:10)			- 87 Hz (1:17.4)			i	Product		
n_2 [r/min]	M_2 [Nm]	c	n_{22} [r/min]	M_{22} [Nm]	n_{21} [r/min]	M_2 [Nm]	n_2 [r/min]	M_2 [Nm]	c	n_2 [r/min]	M_2 [Nm]	c		g500	m5□□	
204	2499	2.0	20	1375	102	2499	204	2499	2.0				7.270	-H8000	40-P250/M4	
86	5895	1.4	8.5	3244	43	5895	86	5895	1.4				17.148	-H8000	40-P250/M4	
77	6646	1.2	7.5	3657	38	6646	77	6646	1.2				19.333	-H8000	40-P250/M4	

3-stage gearboxes

Mains operation 400 V, 50 Hz			Inverter operation 5 Hz -		- 20 ... 25 Hz		- 50 Hz (1:10)			- 87 Hz (1:17.4)			i	Product		
n_2 [r/min]	M_2 [Nm]	c	n_{22} [r/min]	M_{22} [Nm]	n_{21} [r/min]	M_2 [Nm]	n_2 [r/min]	M_2 [Nm]	c	n_2 [r/min]	M_2 [Nm]	c		g500	m5□□	
53	9530	0.8	5.2	5244	26	9530	53	9530	0.8				28.128	-H8000	40-P250/M4	
41	12309	1.1	4.0	6773	20	12309	41	12309	1.1				36.331	-H14000	40-P250/M4	
36	14037	1.0	3.5	7724	18	14037	36	14037	1.0				41.433	-H14000	40-P250/M4	
33	15266	0.9	3.2	8400	16	15266	33	15266	0.9				45.060	-H14000	40-P250/M4	

Dimensions, notes

Notes on the dimensions

The following legend shows the layout of the dimension sheets.

Product gearbox

g500-H100

Driven shaft design

Abmessungen mit Vollwelle

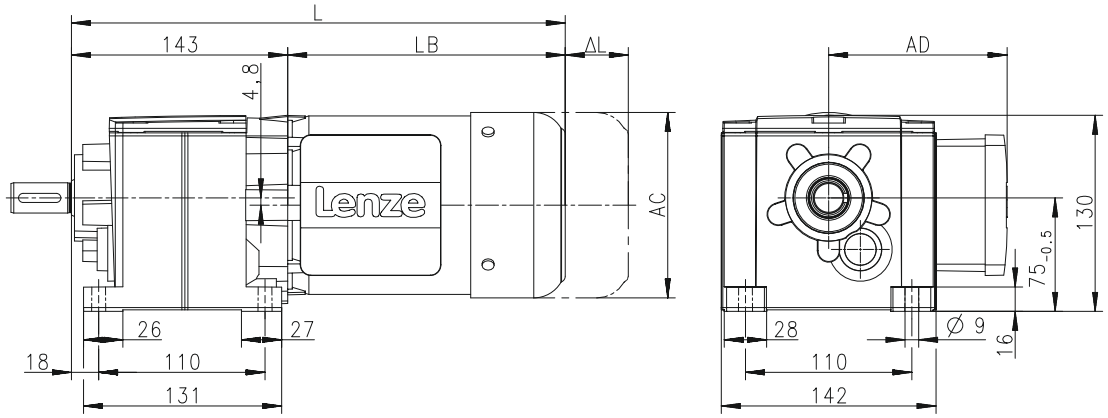

Product Motor

			MD□MA□□				
			063-12	063-32	063-42	071-32	071-42
Gesamtlänge	L	[mm]		326		346	
Länge Motor	LB	[mm]		183		203	
Länge Motoranbauten	ΔL	[mm]		170		165	
Motordurchmesser	AC	[mm]		123		139	
Abstand Motor/Anschluss	AD	[mm]		100		109	

Distance of motor centre to the end of terminal box

Total length of the drive without built-on accessories

Motor diameter

Motor length without built-on accessories

Additional length of the built-on accessories (longest version)

► If the mounting area (foot support) towards the motor is longer than the gearbox foot, some motors collide with the mounting area!

Dimensions, 4-pole motors

g500-H45

Dimensions with solid shaft
Gearbox design: VBR

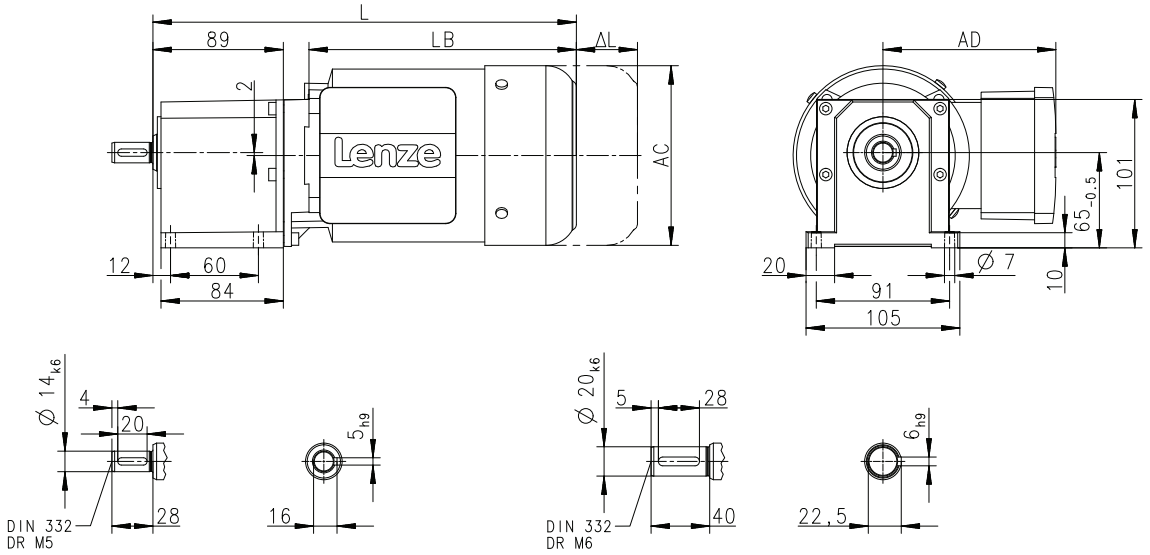

			MD□MA□□						
			063-02	063-12	063-22	063-32	063-42	071-32	071-42
Total length	L	[mm]	261	288	261	288		308	
Motor length	LB	[mm]	156	183	156	183		203	
Length of motor options	Δ L	[mm]	135	170	135	170		165	
Motor diameter	AC	[mm]	123					139	
Distance motor/connection	AD	[mm]	100					109	

L = length of the motor without built-on accessories
ΔL = additional length of the built-on accessories (longest type)

Dimensions, 4-pole motors

g500-H45

Dimensions with solid shaft and centering
Gearbox design: VCR

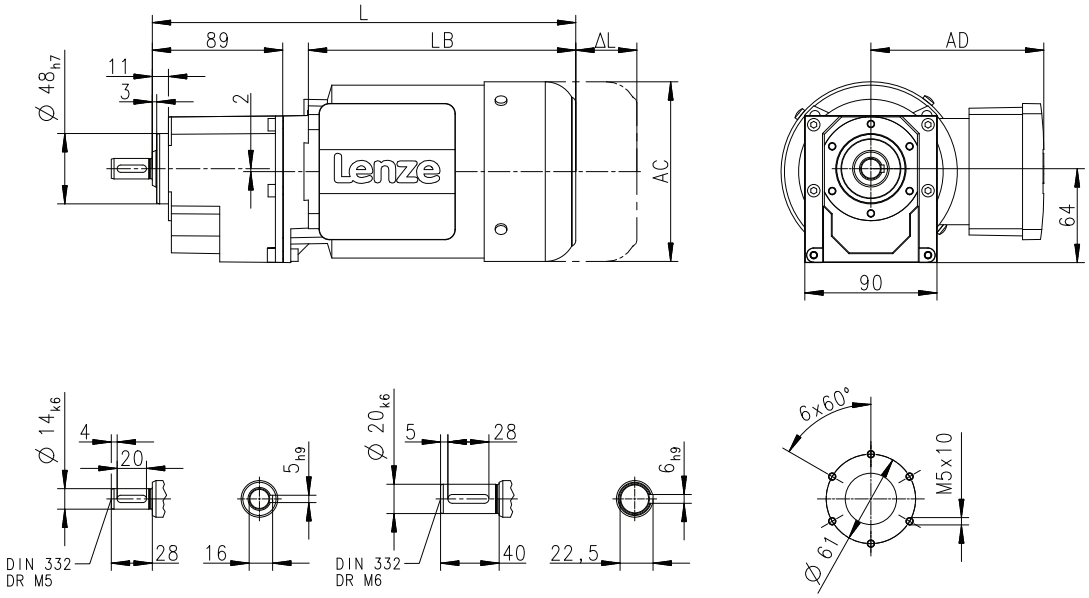

			MD□MA□□						
			063-02	063-12	063-22	063-32	063-42	071-32	071-42
Total length	L	[mm]	261	288	261	288		308	
Motor length	LB	[mm]	156	183	156	183		203	
Length of motor options	Δ L	[mm]	135	170	135	170		165	
Motor diameter	AC	[mm]	123					139	
Distance motor/connection	AD	[mm]	100					109	

L = length of the motor without built-on accessories
ΔL = additional length of the built-on accessories (longest type)

Dimensions, 4-pole motors

g500-H45

Dimensions with solid shaft and flange
Gearbox design: VCK

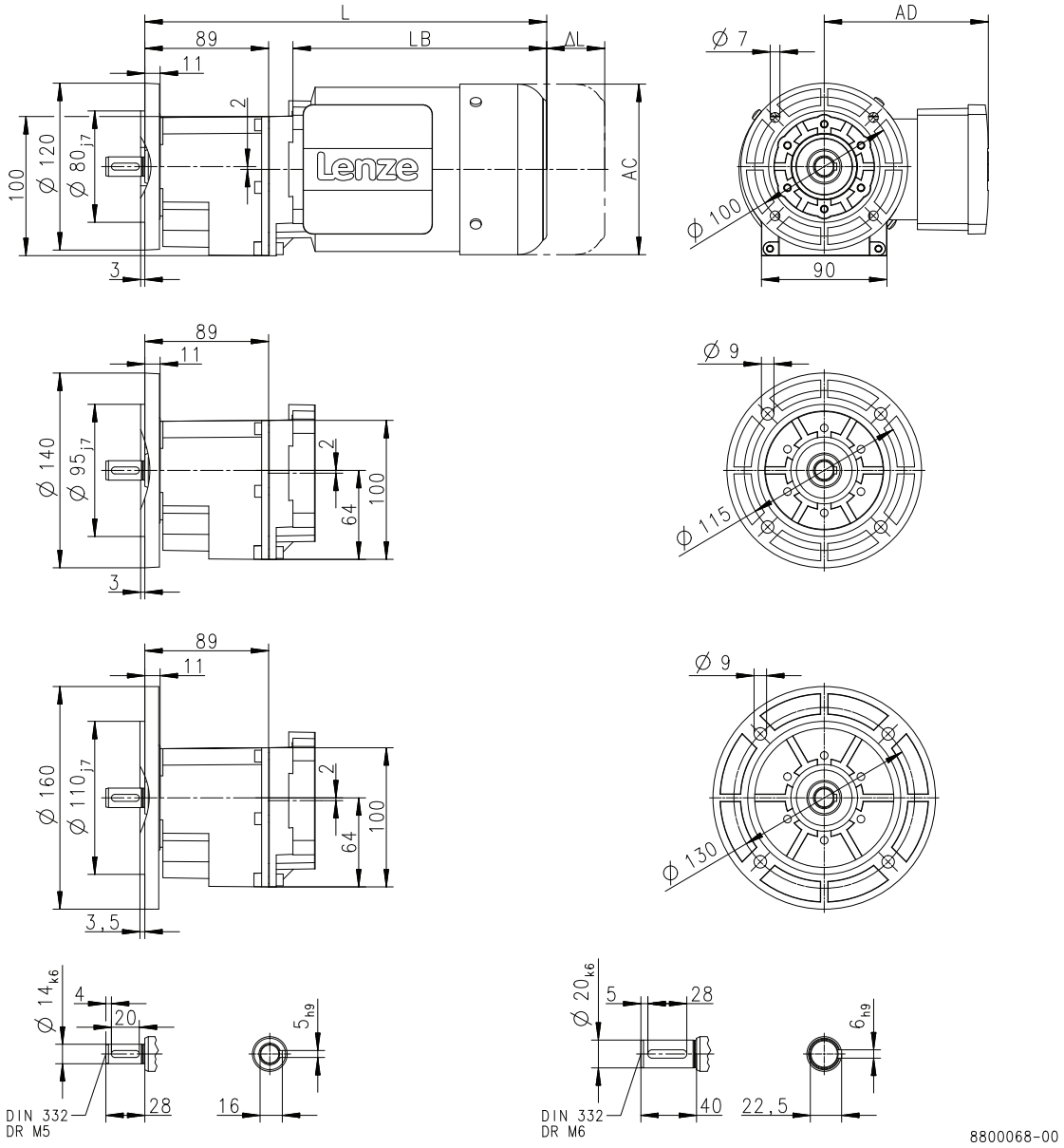

			MD□MA□□						
			063-02	063-12	063-22	063-32	063-42	071-32	071-42
Total length	L	[mm]	261	288	261	288		308	
Motor length	LB	[mm]	156	183	156	183		203	
Length of motor options	Δ L	[mm]	135	170	135	170		165	
Motor diameter	AC	[mm]	123					139	
Distance motor/connection	AD	[mm]	100					109	

L = length of the motor without built-on accessories
ΔL = additional length of the built-on accessories (longest type)

Dimensions, 4-pole motors

g500-H100

Dimensions with solid shaft
Gearbox design: VBR

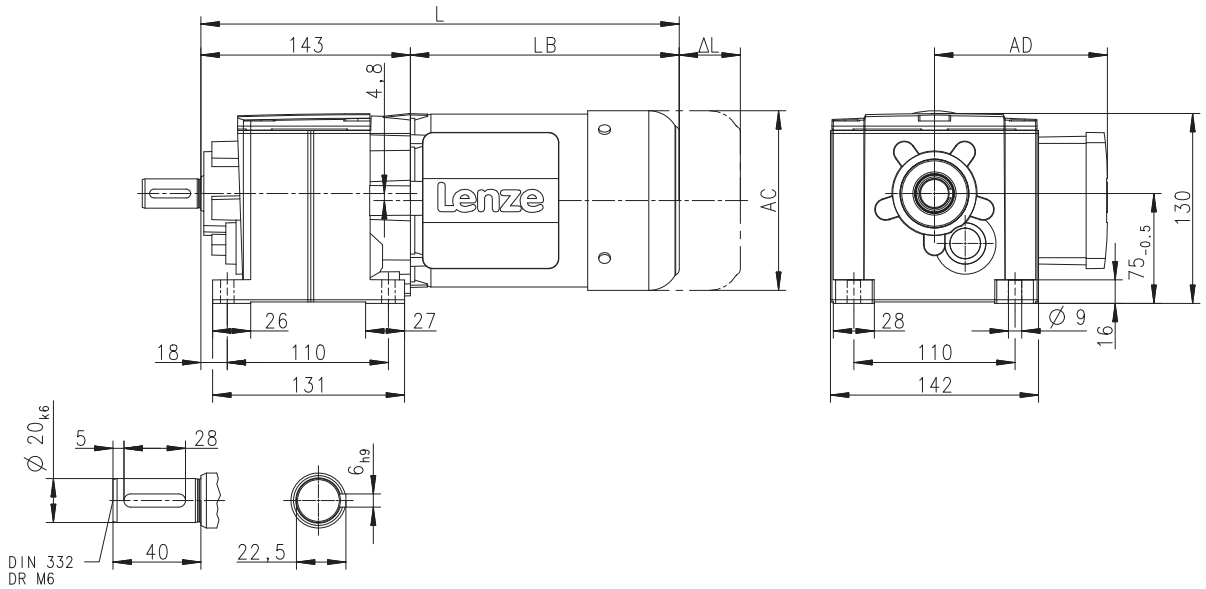

			MD□MA□□				
			063-12	063-32	063-42	071-32	071-42
Total length	L	[mm]	326			346	
Motor length	LB	[mm]	183			203	
Length of motor options	Δ L	[mm]	170			165	
Motor diameter	AC	[mm]	123			139	
Distance motor/connection	AD	[mm]	100			109	

L = length of the motor without built-on accessories
ΔL = additional length of the built-on accessories (longest type)

Dimensions, 4-pole motors

g500-H100

Dimensions with solid shaft
Gearbox design: VBR

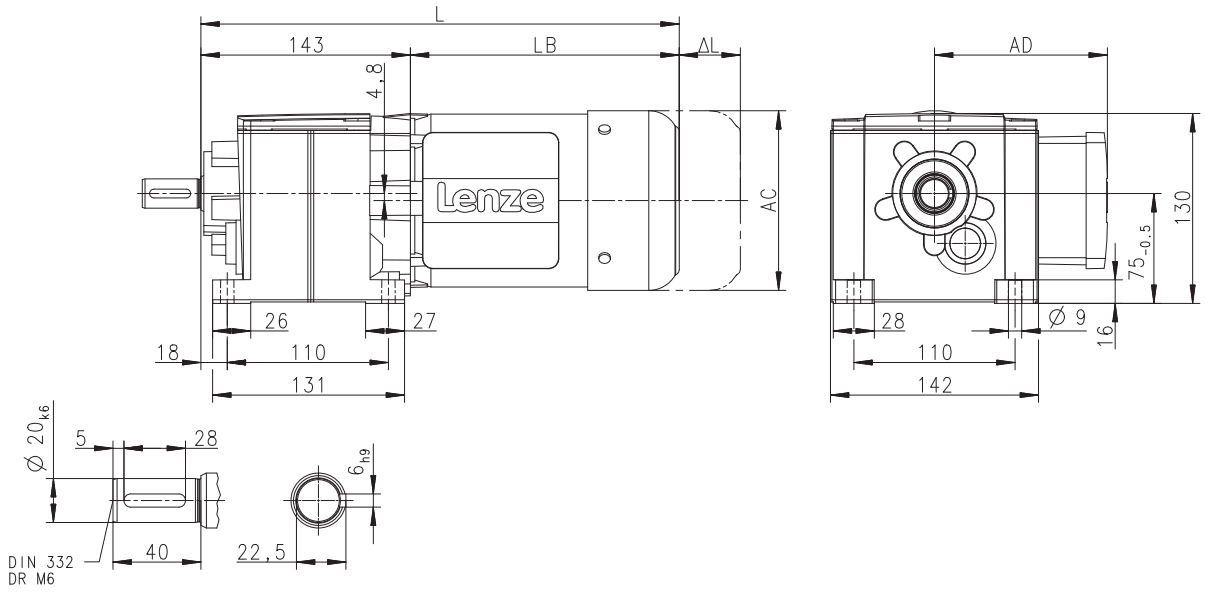

			m550		
			-P80/M4	-P90/M4	-P90/L4
Total length	L	[mm]	403	467	
Motor length	LB	[mm]	260	324	
Length of motor options	Δ L	[mm]	183	175	
Motor diameter	AC	[mm]	157	177	
Distance motor/connection	AD	[mm]	148	154	

L = length of the motor without built-on accessories
ΔL = additional length of the built-on accessories (longest type)

Dimensions, 4-pole motors

g500-H100

Dimensions with solid shaft and centering
Gearbox design: VAR, VCR

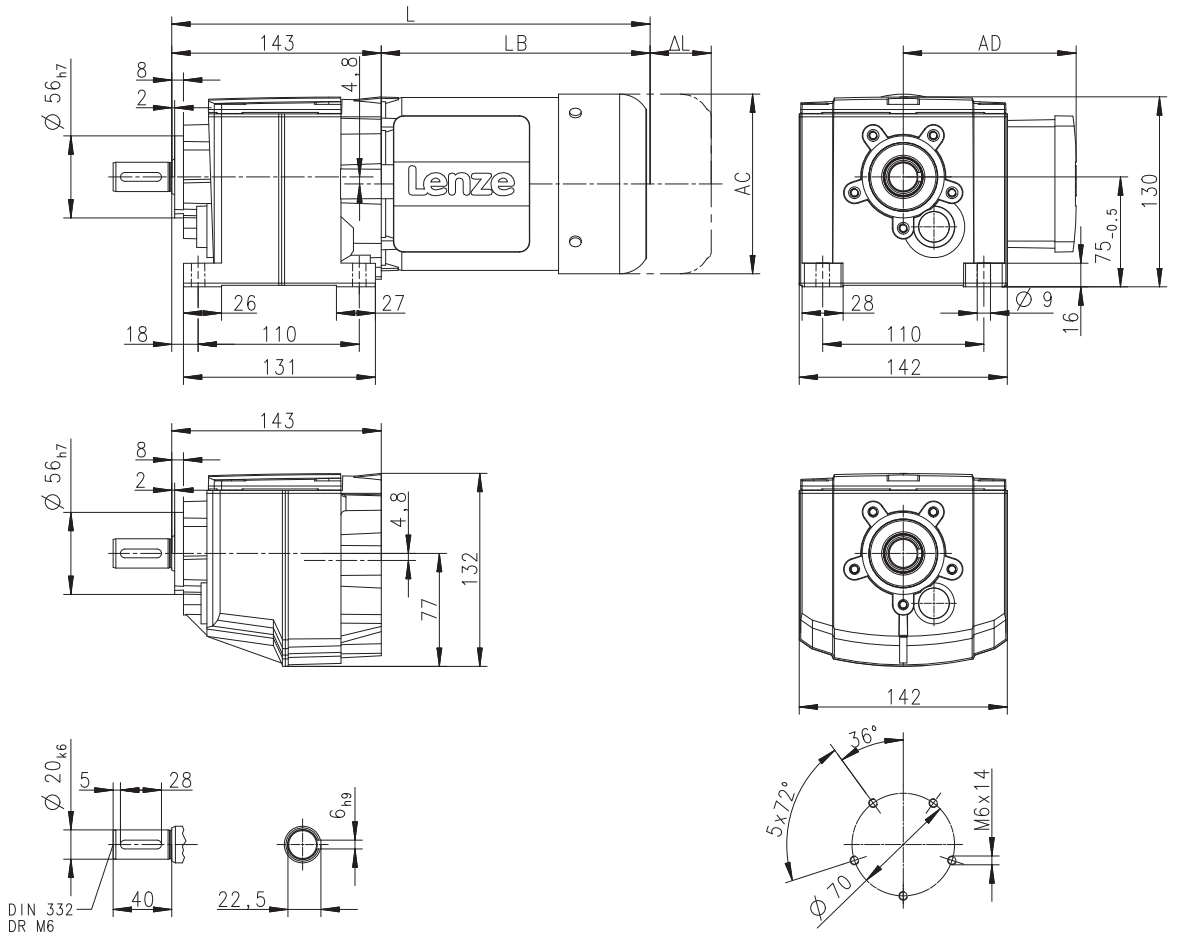

			MD□MA□□				
			063-12	063-32	063-42	071-32	071-42
Total length	L	[mm]	326			346	
Motor length	LB	[mm]	183			203	
Length of motor options	Δ L	[mm]	170			165	
Motor diameter	AC	[mm]	123			139	
Distance motor/connection	AD	[mm]	100			109	

L = length of the motor without built-on accessories
ΔL = additional length of the built-on accessories (longest type)

Dimensions, 4-pole motors

g500-H100

Dimensions with solid shaft and centering
Gearbox design: VAR, VCR

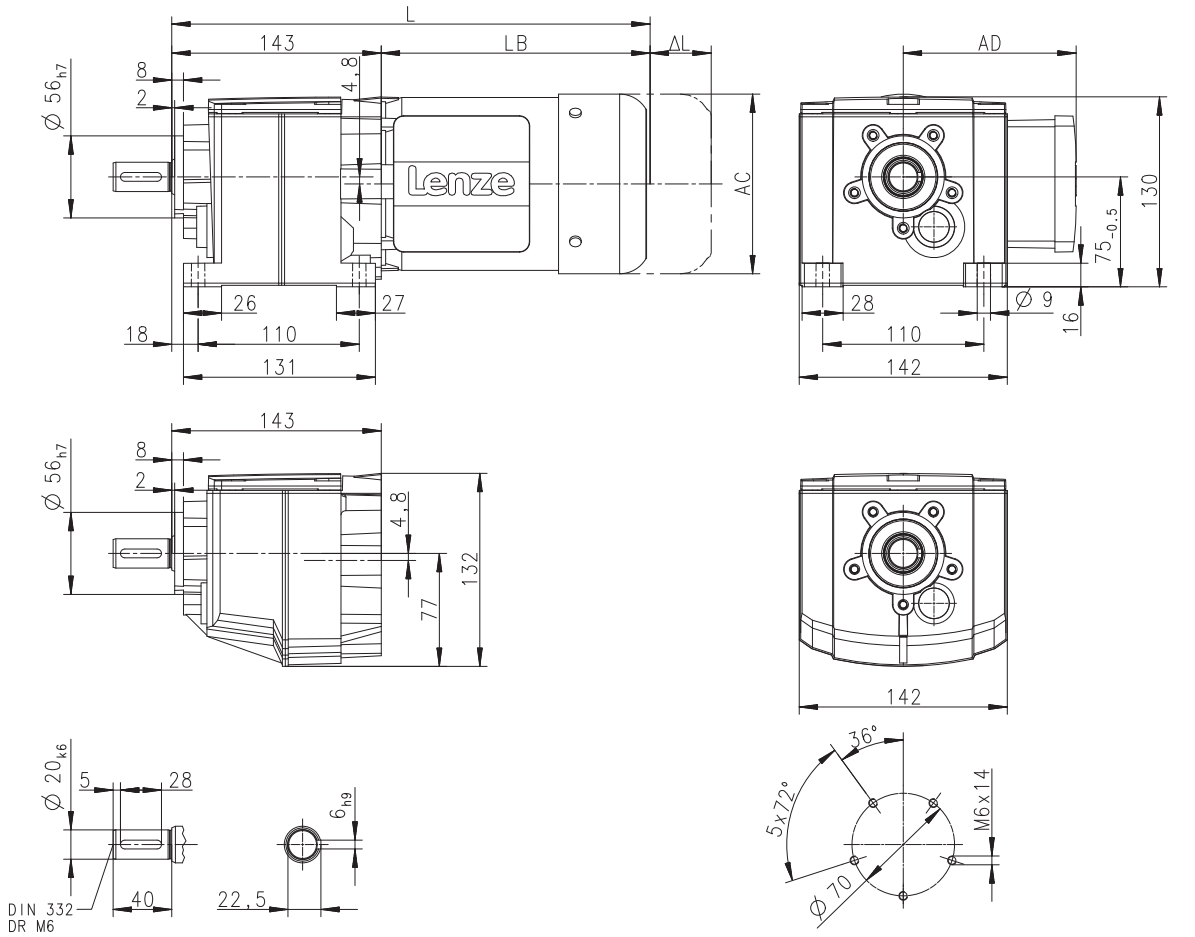

			m550		
			-P80/M4	-P90/M4	-P90/L4
Total length	L	[mm]	403	467	
Motor length	LB	[mm]	260	324	
Length of motor options	Δ L	[mm]	183	175	
Motor diameter	AC	[mm]	157	177	
Distance motor/connection	AD	[mm]	148	154	

L = length of the motor without built-on accessories
ΔL = additional length of the built-on accessories (longest type)

Dimensions, 4-pole motors

g500-H100

Dimensions with solid shaft and flange
Gearbox design: VAK, VCK

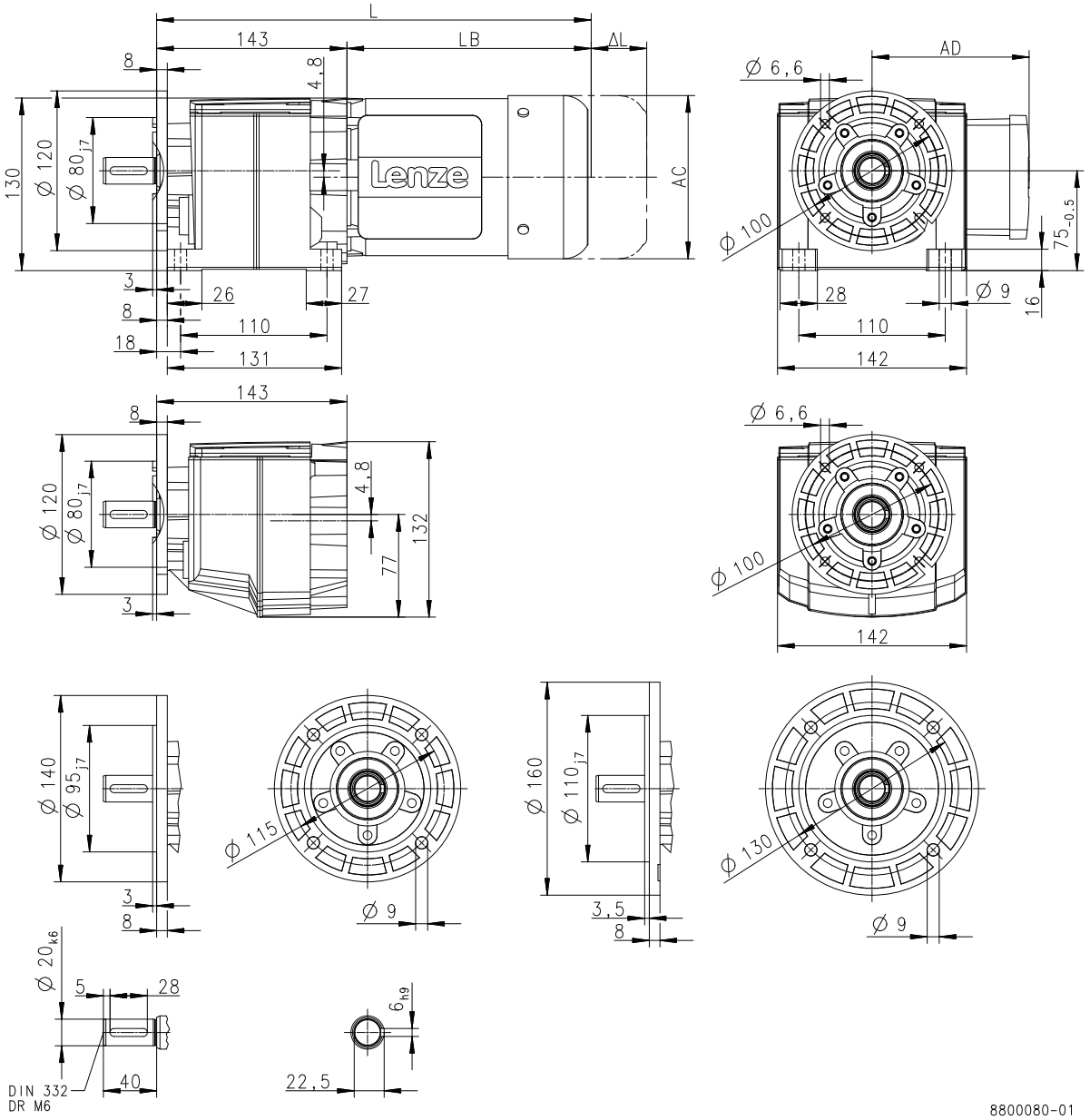

			MD□MA□□				
			063-12	063-32	063-42	071-32	071-42
Total length	L	[mm]	326			346	
Motor length	LB	[mm]	183			203	
Length of motor options	Δ L	[mm]	170			165	
Motor diameter	AC	[mm]	123			139	
Distance motor/connection	AD	[mm]	100			109	

L = length of the motor without built-on accessories
ΔL = additional length of the built-on accessories (longest type)

Dimensions, 4-pole motors

g500-H100

Dimensions with solid shaft and flange
Gearbox design: VAK, VCK

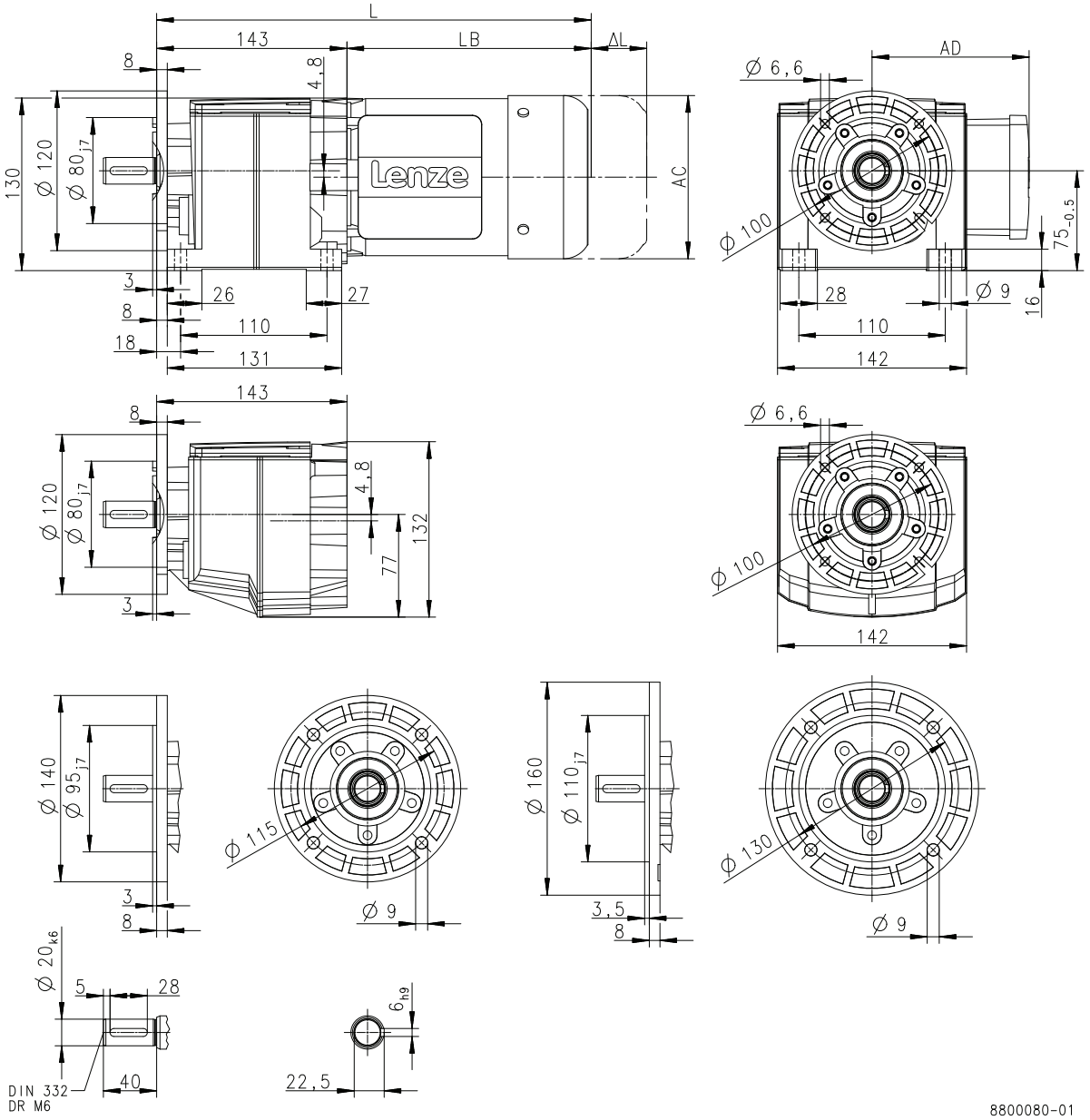

			m550		
			-P80/M4	-P90/M4	-P90/L4
Total length	L	[mm]	403	467	
Motor length	LB	[mm]	260	324	
Length of motor options	Δ L	[mm]	183	175	
Motor diameter	AC	[mm]	157	177	
Distance motor/connection	AD	[mm]	148	154	

L = length of the motor without built-on accessories
ΔL = additional length of the built-on accessories (longest type)

Dimensions, 4-pole motors

g500-H100

Dimensions with solid shaft and flange
Gearbox design: VCP

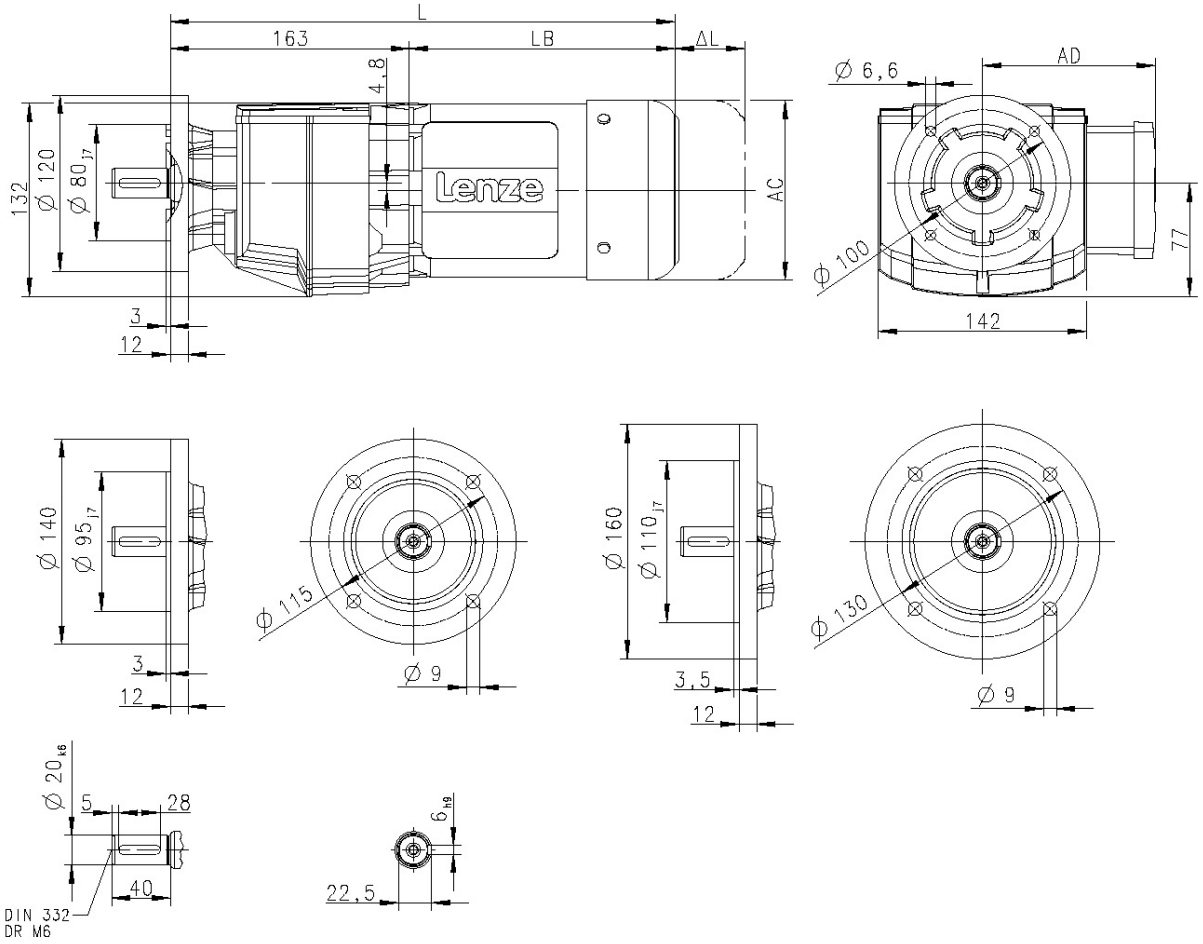

			MD□MA□□				
			063-12	063-32	063-42	071-32	071-42
Total length	L	[mm]	346			366	
Motor length	LB	[mm]	183			203	
Length of motor options	Δ L	[mm]	170			165	
Motor diameter	AC	[mm]	123			139	
Distance motor/connection	AD	[mm]	100			109	

L = length of the motor without built-on accessories
ΔL = additional length of the built-on accessories (longest type)

Dimensions, 4-pole motors

g500-H100

Dimensions with solid shaft and flange
Gearbox design: VCP

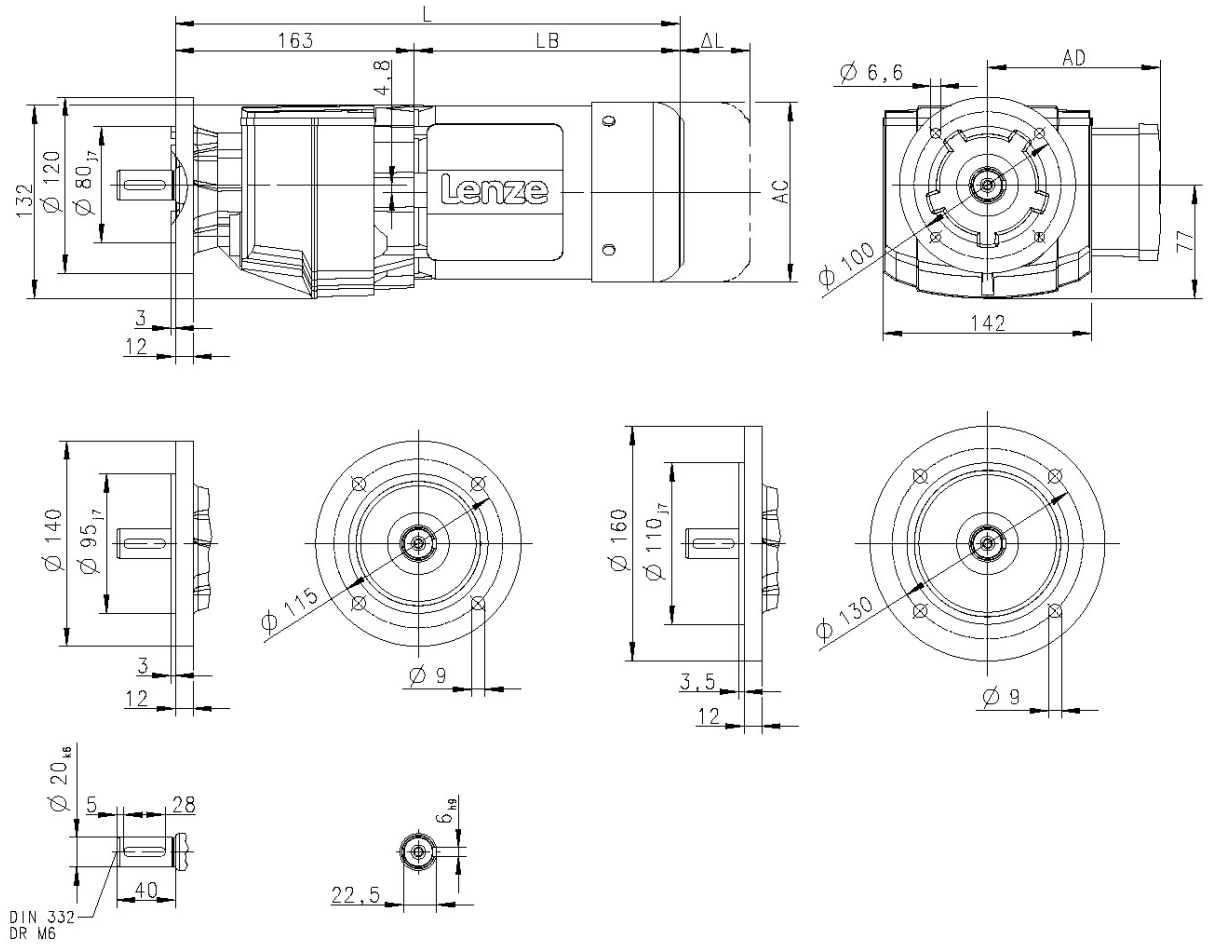

			m550		
			-P80/M4	-P90/M4	-P90/L4
Total length	L	[mm]	423	487	
Motor length	LB	[mm]	260	324	
Length of motor options	Δ L	[mm]	183	175	
Motor diameter	AC	[mm]	157	177	
Distance motor/connection	AD	[mm]	148	154	

L = length of the motor without built-on accessories
ΔL = additional length of the built-on accessories (longest type)

Dimensions, 4-pole motors

g500-H140

Dimensions with solid shaft
Gearbox design: VBR

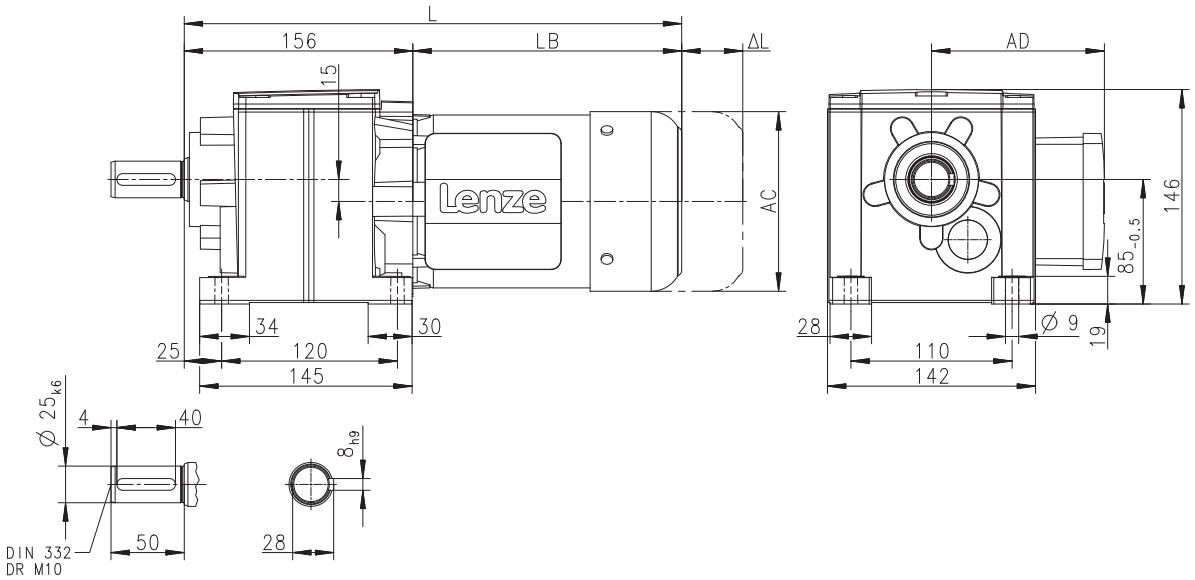

			MD□MA□□				
			063-12	063-32	063-42	071-32	071-42
Total length	L	[mm]	339			359	
Motor length	LB	[mm]	183			203	
Length of motor options	Δ L	[mm]	170			165	
Motor diameter	AC	[mm]	123			139	
Distance motor/connection	AD	[mm]	100			109	

L = length of the motor without built-on accessories
ΔL = additional length of the built-on accessories (longest type)

Dimensions, 4-pole motors

g500-H140

Dimensions with solid shaft
Gearbox design: VBR

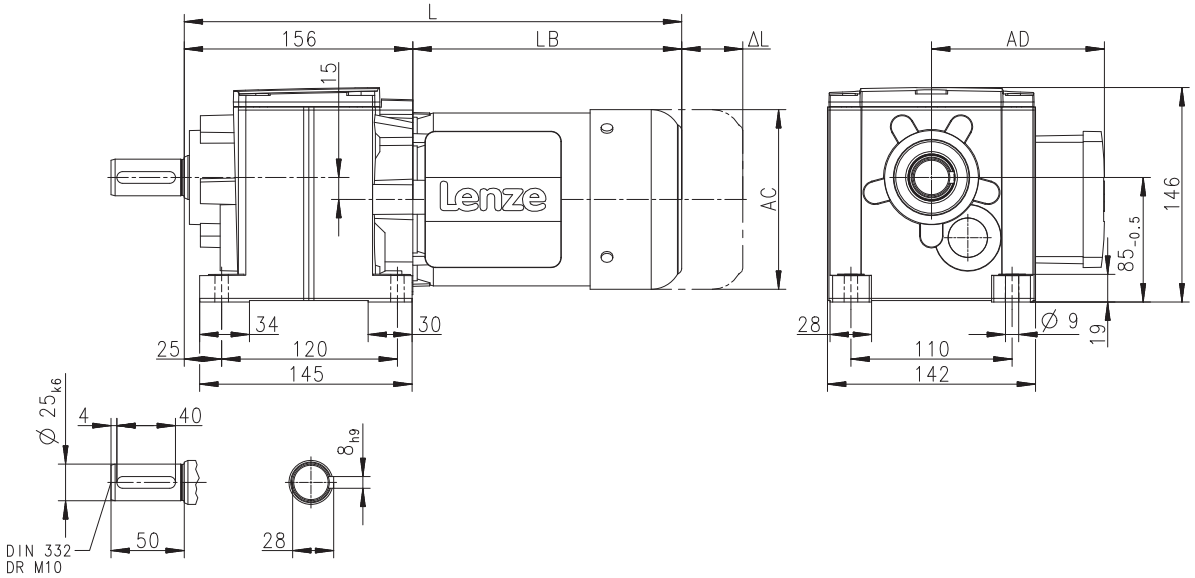

			m550		
			-P80/M4	-P90/M4	-P90/L4
Total length	L	[mm]	416	480	
Motor length	LB	[mm]	260	324	
Length of motor options	Δ L	[mm]	183	175	
Motor diameter	AC	[mm]	157	177	
Distance motor/connection	AD	[mm]	148	154	

L = length of the motor without built-on accessories
ΔL = additional length of the built-on accessories (longest type)

Dimensions, 4-pole motors

g500-H140

Dimensions with solid shaft and centering
Gearbox design: VAR, VCR

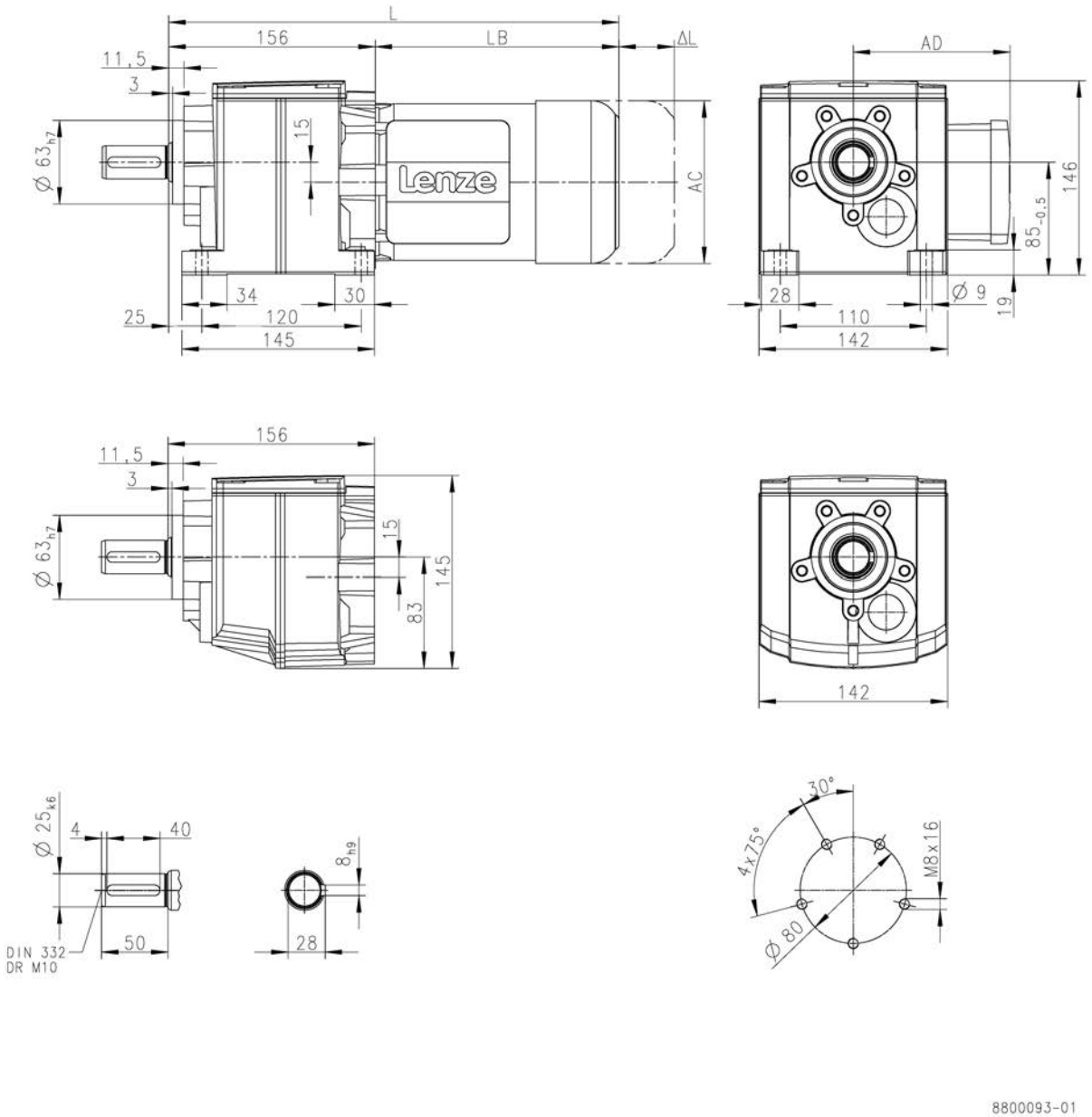

			MD□MA□□				
			063-12	063-32	063-42	071-32	071-42
Total length	L	[mm]	339			359	
Motor length	LB	[mm]	183			203	
Length of motor options	Δ L	[mm]	170			165	
Motor diameter	AC	[mm]	123			139	
Distance motor/connection	AD	[mm]	100			109	

L = length of the motor without built-on accessories
ΔL = additional length of the built-on accessories (longest type)

Dimensions, 4-pole motors

g500-H140

Dimensions with solid shaft and centering
Gearbox design: VAR, VCR

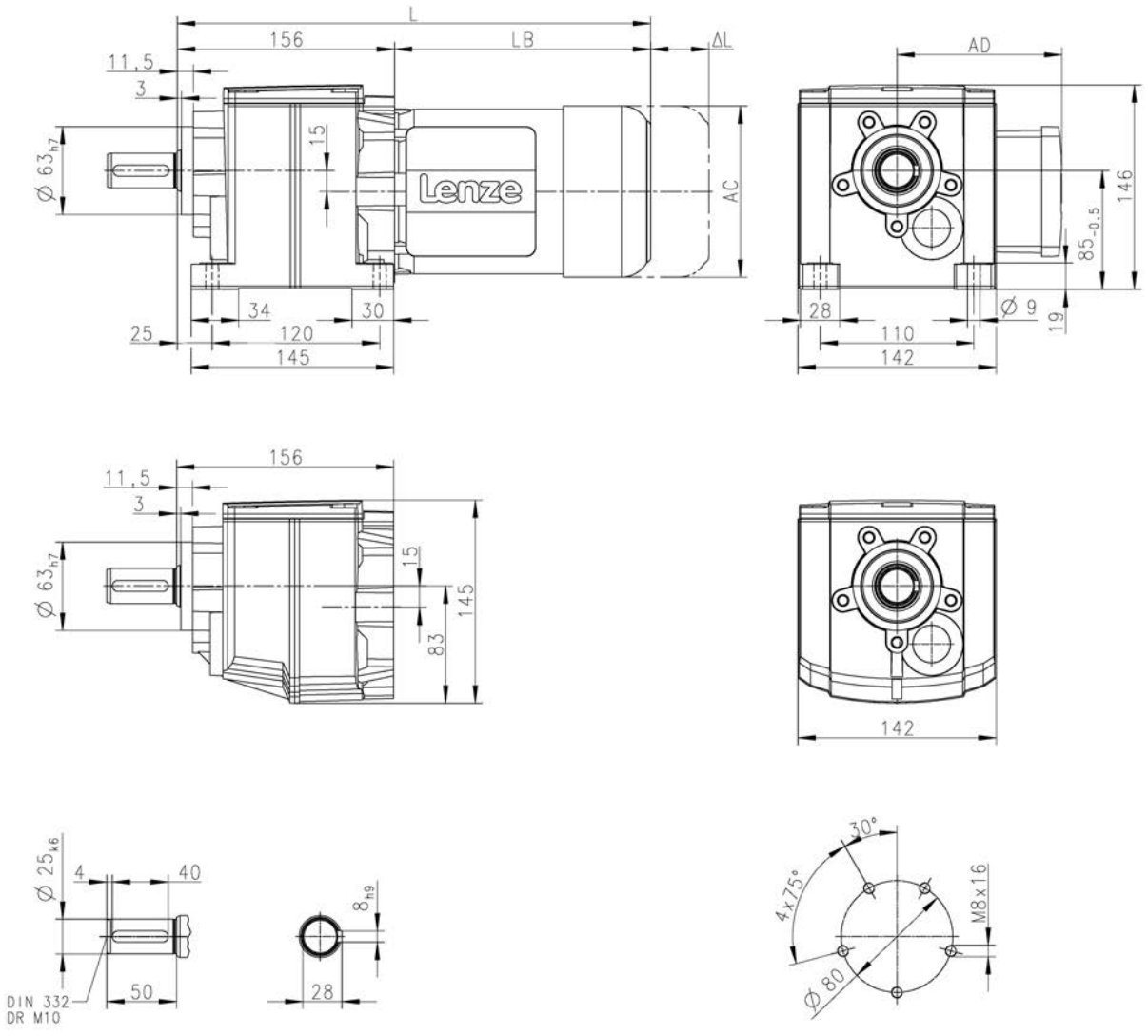

			m550		
			-P80/M4	-P90/M4	-P90/L4
Total length	L	[mm]	416	480	
Motor length	LB	[mm]	260	324	
Length of motor options	Δ L	[mm]	183	175	
Motor diameter	AC	[mm]	157	177	
Distance motor/connection	AD	[mm]	148	154	

L = length of the motor without built-on accessories
ΔL = additional length of the built-on accessories (longest type)

Dimensions, 4-pole motors

g500-H140

Dimensions with solid shaft and flange
Gearbox design: VAK, VCK

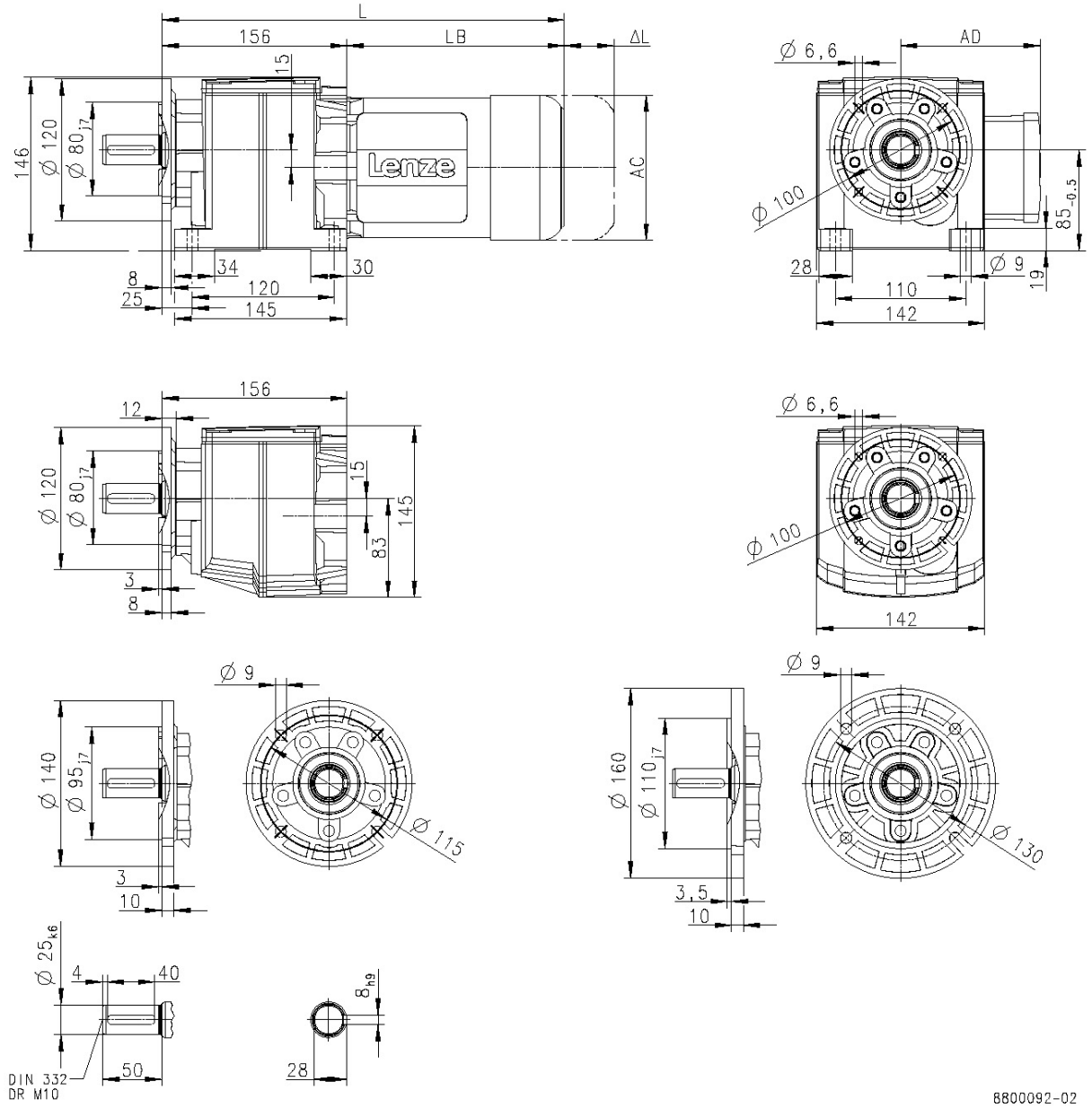

			MD□MA□□				
			063-12	063-32	063-42	071-32	071-42
Total length	L	[mm]	339			359	
Motor length	LB	[mm]	183			203	
Length of motor options	Δ L	[mm]	170			165	
Motor diameter	AC	[mm]	123			139	
Distance motor/connection	AD	[mm]	100			109	

L = length of the motor without built-on accessories
ΔL = additional length of the built-on accessories (longest type)

Dimensions, 4-pole motors

g500-H140

Dimensions with solid shaft and flange
Gearbox design: VAK, VCK

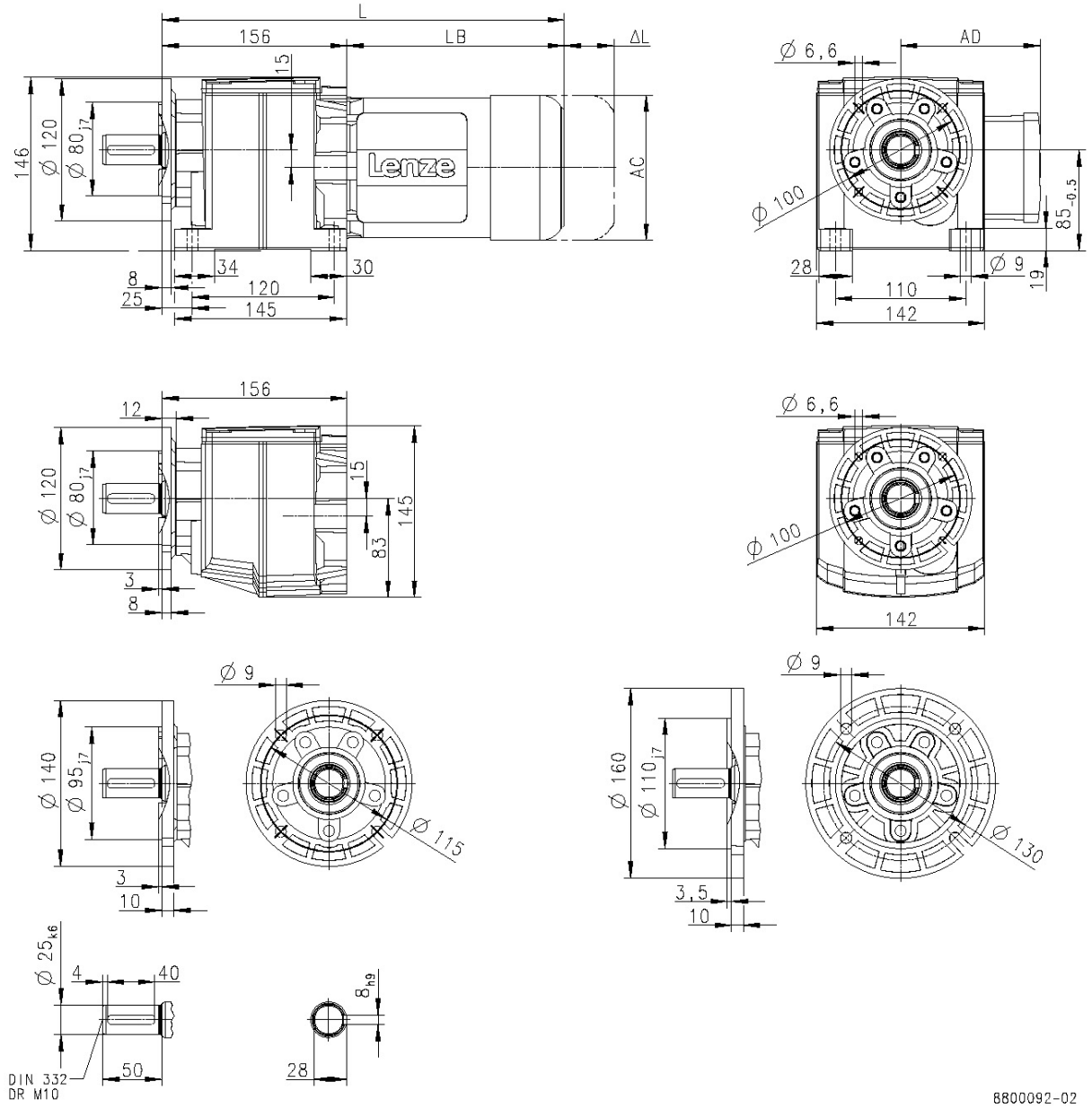

			m550		
			-P80/M4	-P90/M4	-P90/L4
Total length	L	[mm]	416	480	
Motor length	LB	[mm]	260	324	
Length of motor options	Δ L	[mm]	183	175	
Motor diameter	AC	[mm]	157	177	
Distance motor/connection	AD	[mm]	148	154	

L = length of the motor without built-on accessories
ΔL = additional length of the built-on accessories (longest type)

Dimensions, 4-pole motors

g500-H140

Dimensions with solid shaft and flange
Gearbox design: VCP

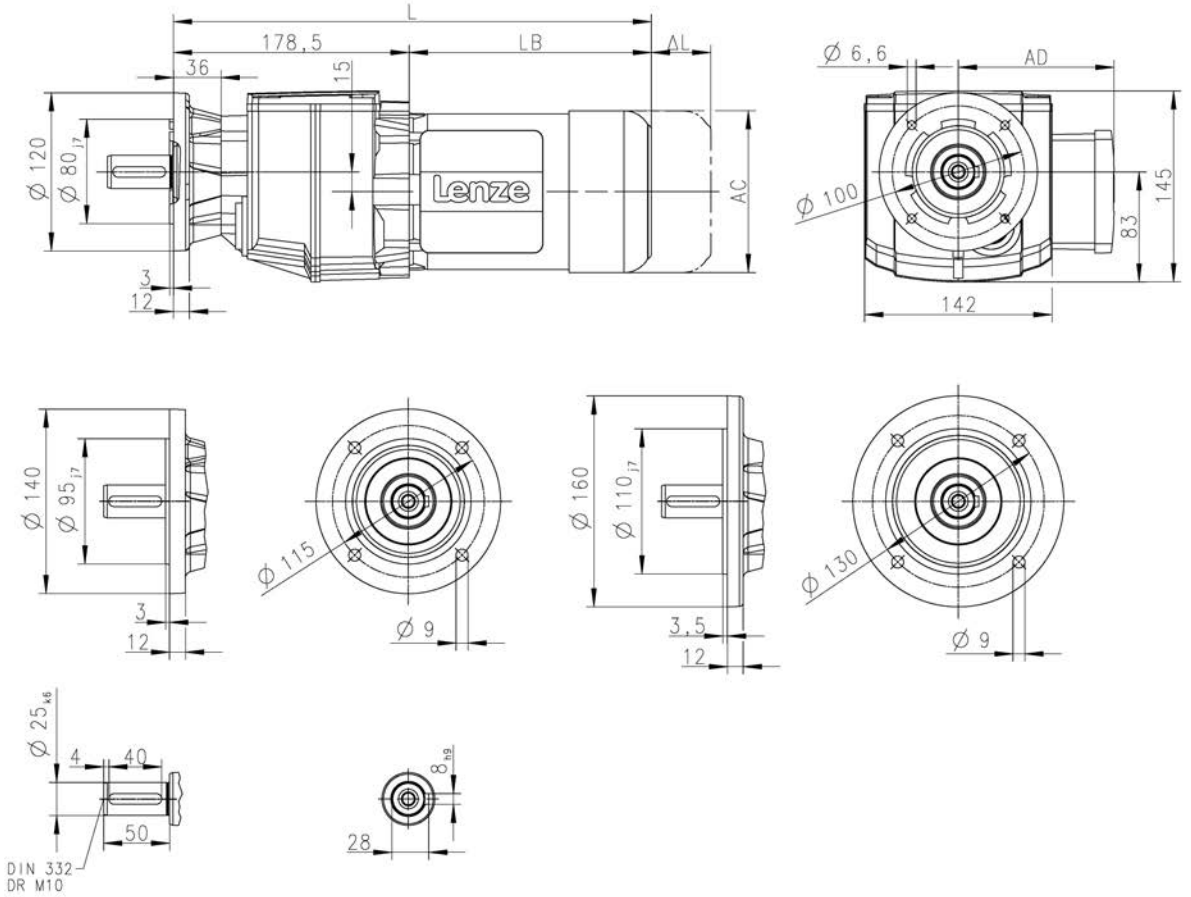

			MD□MA□□				
			063-12	063-32	063-42	071-32	071-42
Total length	L	[mm]	362			382	
Motor length	LB	[mm]	183			203	
Length of motor options	Δ L	[mm]	170			165	
Motor diameter	AC	[mm]	123			139	
Distance motor/connection	AD	[mm]	100			109	

L = length of the motor without built-on accessories
ΔL = additional length of the built-on accessories (longest type)

Dimensions, 4-pole motors

g500-H140

Dimensions with solid shaft and flange
Gearbox design: VCP

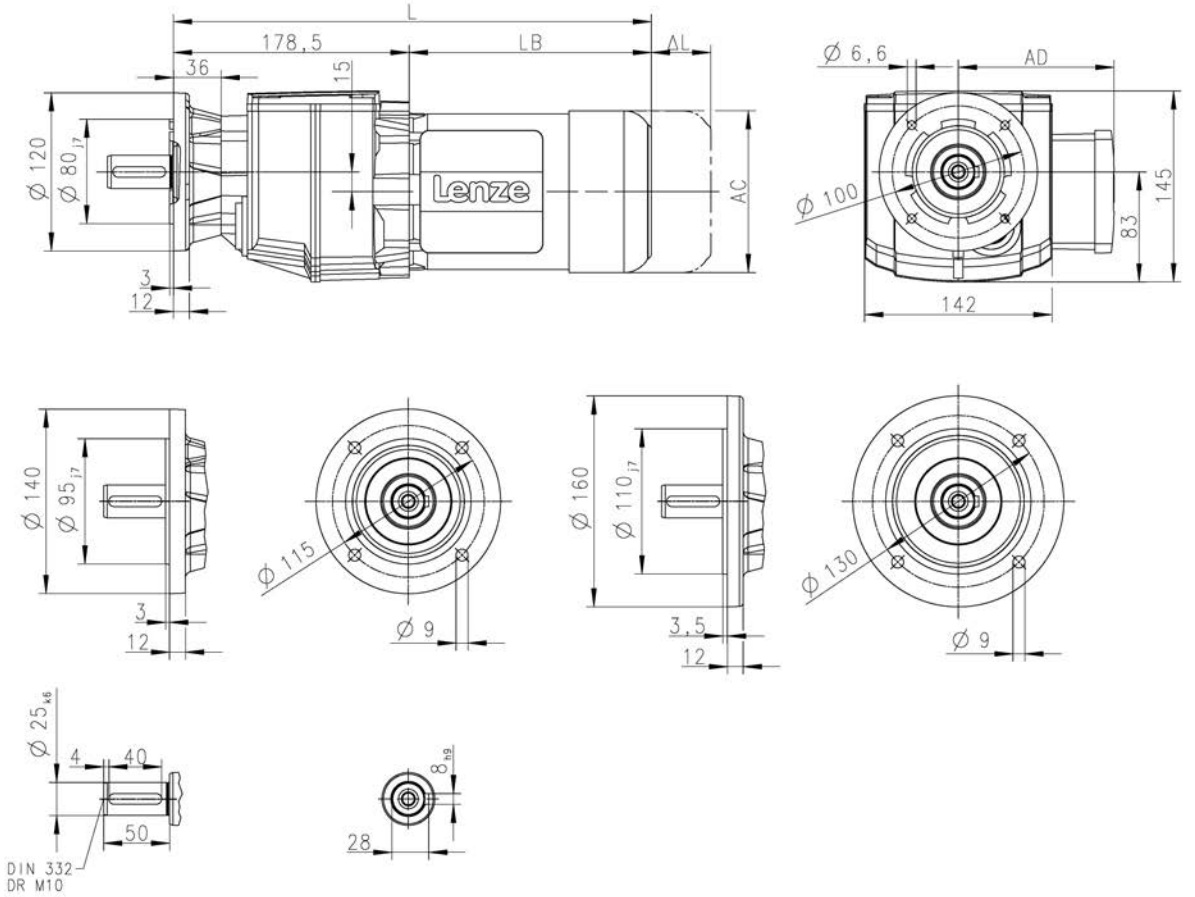

			m550		
			-P80/M4	-P90/M4	-P90/L4
Total length	L	[mm]	439	503	
Motor length	LB	[mm]	260	324	
Length of motor options	Δ L	[mm]	183	175	
Motor diameter	AC	[mm]	157	177	
Distance motor/connection	AD	[mm]	148	154	

L = length of the motor without built-on accessories
ΔL = additional length of the built-on accessories (longest type)

Dimensions, 4-pole motors

g500-H210

Dimensions with solid shaft
Gearbox design: VBR

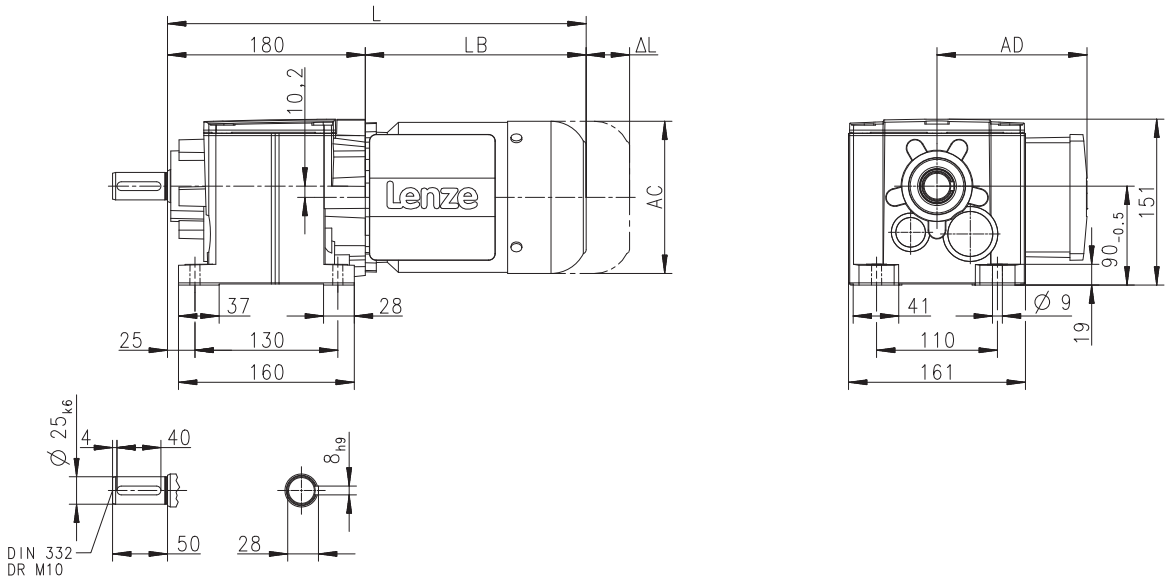

			MD□MA□□				
			063-12	063-32	063-42	071-32	071-42
Total length	L	[mm]	363			383	
Motor length	LB	[mm]	183			203	
Length of motor options	Δ L	[mm]	170			165	
Motor diameter	AC	[mm]	123			139	
Distance motor/connection	AD	[mm]	100			109	

L = length of the motor without built-on accessories
ΔL = additional length of the built-on accessories (longest type)

Dimensions, 4-pole motors

g500-H210

Dimensions with solid shaft
Gearbox design: VBR

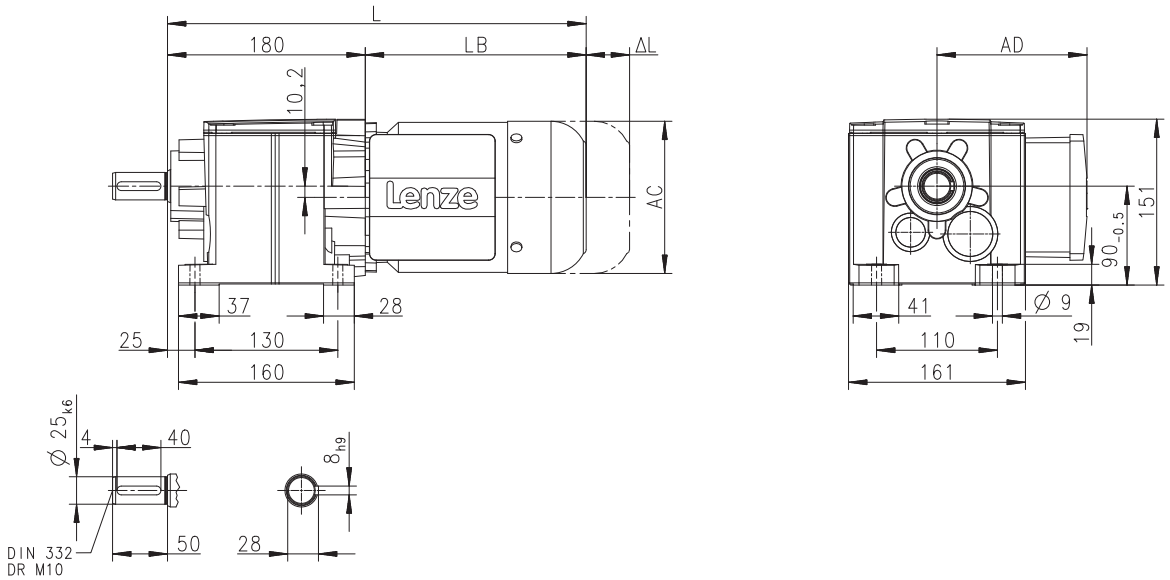

			m550				
			-P80/M4	-P90/M4	-P90/L4	-P100/M4	-P100/L4
Total length	L	[mm]	440	504		564	
Motor length	LB	[mm]	260	324		384	
Length of motor options	Δ L	[mm]	183	175		170	
Motor diameter	AC	[mm]	157	177		195	
Distance motor/connection	AD	[mm]	148	154		164	

L = length of the motor without built-on accessories
ΔL = additional length of the built-on accessories (longest type)

Dimensions, 4-pole motors

g500-H210

Dimensions with solid shaft and centering
Gearbox design: VAR, VCR

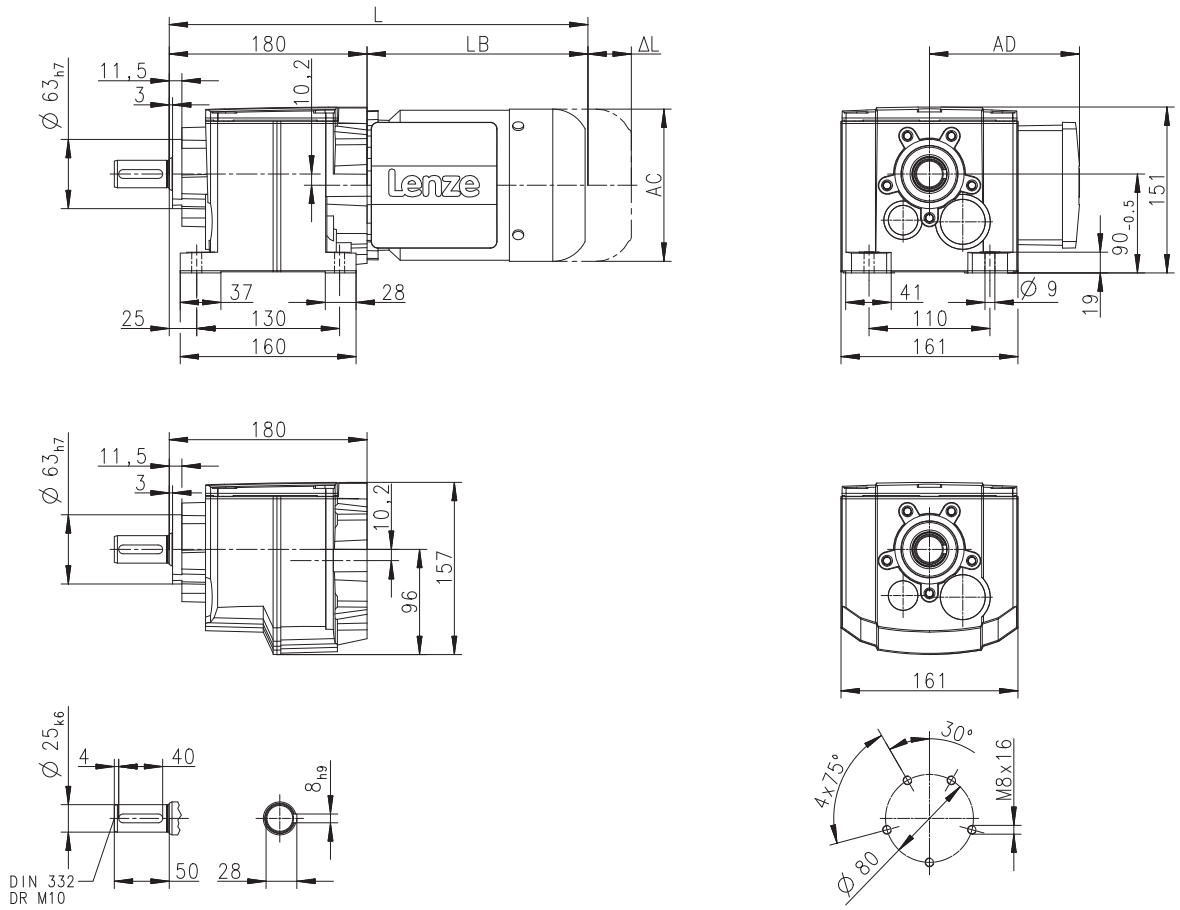

			MD□MA□□				
			063-12	063-32	063-42	071-32	071-42
Total length	L	[mm]	363			383	
Motor length	LB	[mm]	183			203	
Length of motor options	Δ L	[mm]	170			165	
Motor diameter	AC	[mm]	123			139	
Distance motor/connection	AD	[mm]	100			109	

L = length of the motor without built-on accessories
ΔL = additional length of the built-on accessories (longest type)

Dimensions, 4-pole motors

g500-H210

Dimensions with solid shaft and centering
Gearbox design: VAR, VCR

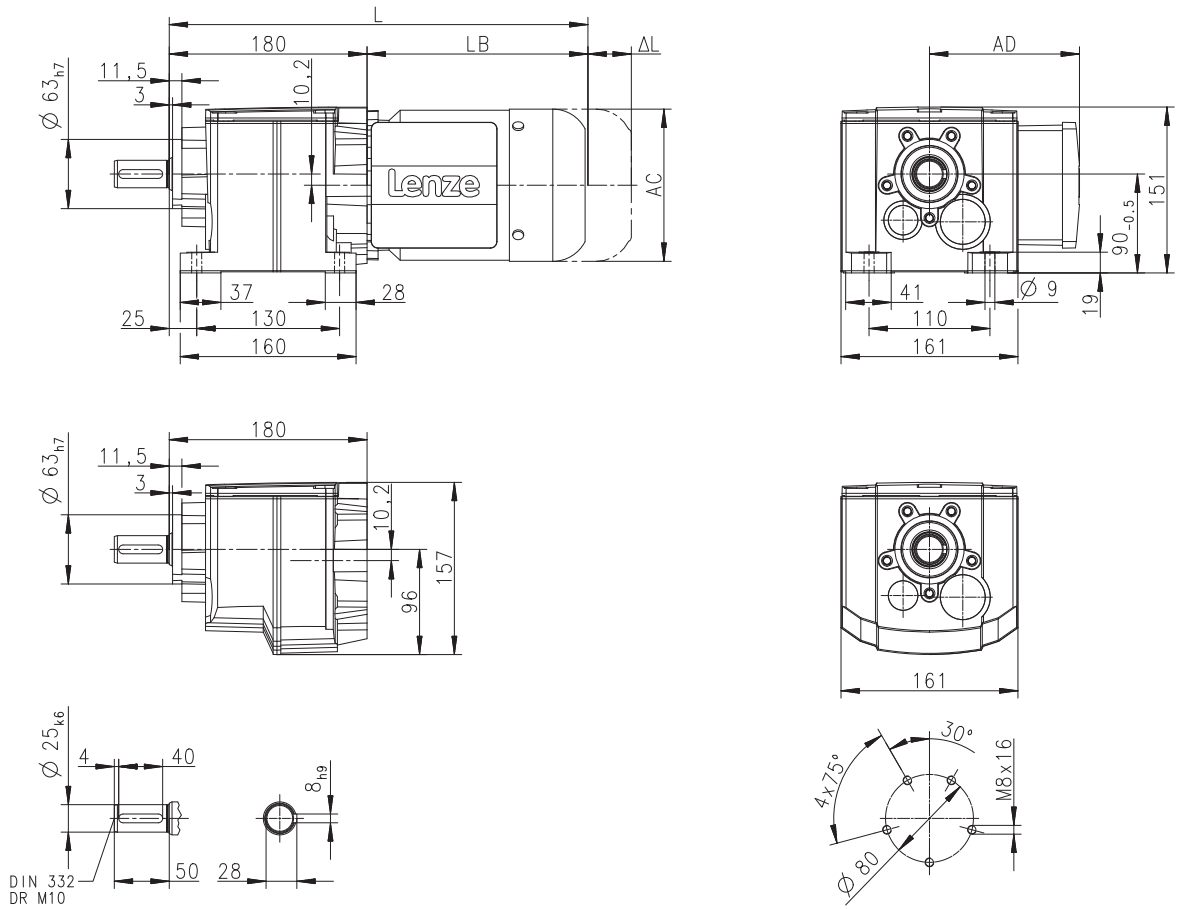

			m550				
			-P80/M4	-P90/M4	-P90/L4	-P100/M4	-P100/L4
Total length	L	[mm]	440	504		564	
Motor length	LB	[mm]	260	324		384	
Length of motor options	Δ L	[mm]	183	175		170	
Motor diameter	AC	[mm]	157	177		195	
Distance motor/connection	AD	[mm]	148	154		164	

L = length of the motor without built-on accessories
ΔL = additional length of the built-on accessories (longest type)

Dimensions, 4-pole motors

g500-H210

Dimensions with solid shaft and flange
Gearbox design: VAK, VCK

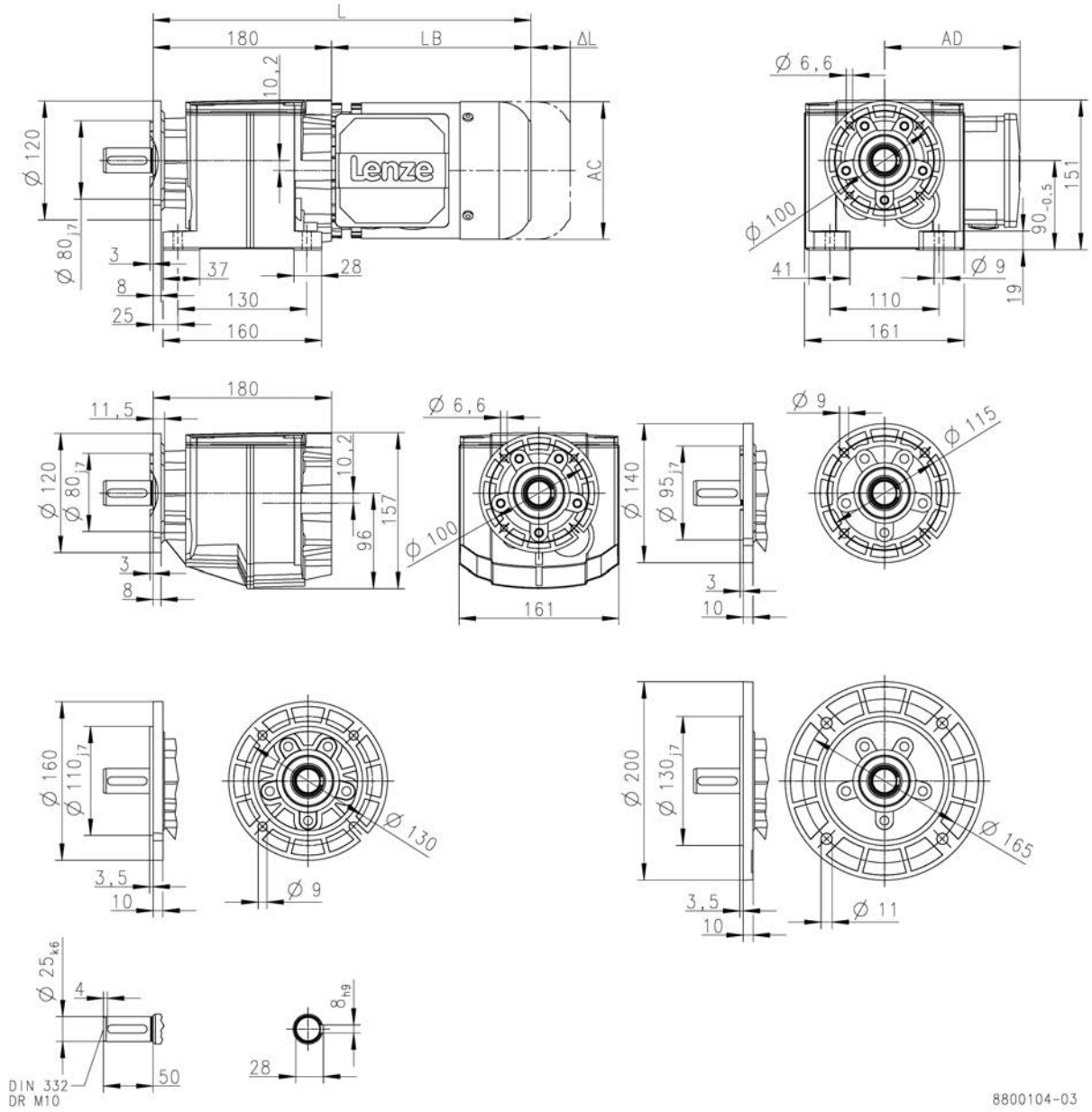

			MD□MA□□				
			063-12	063-32	063-42	071-32	071-42
Total length	L	[mm]	363			383	
Motor length	LB	[mm]	183			203	
Length of motor options	Δ L	[mm]	170			165	
Motor diameter	AC	[mm]	123			139	
Distance motor/connection	AD	[mm]	100			109	

L = length of the motor without built-on accessories
ΔL = additional length of the built-on accessories (longest type)

Dimensions, 4-pole motors

g500-H210

Dimensions with solid shaft and flange
Gearbox design: VAK, VCK

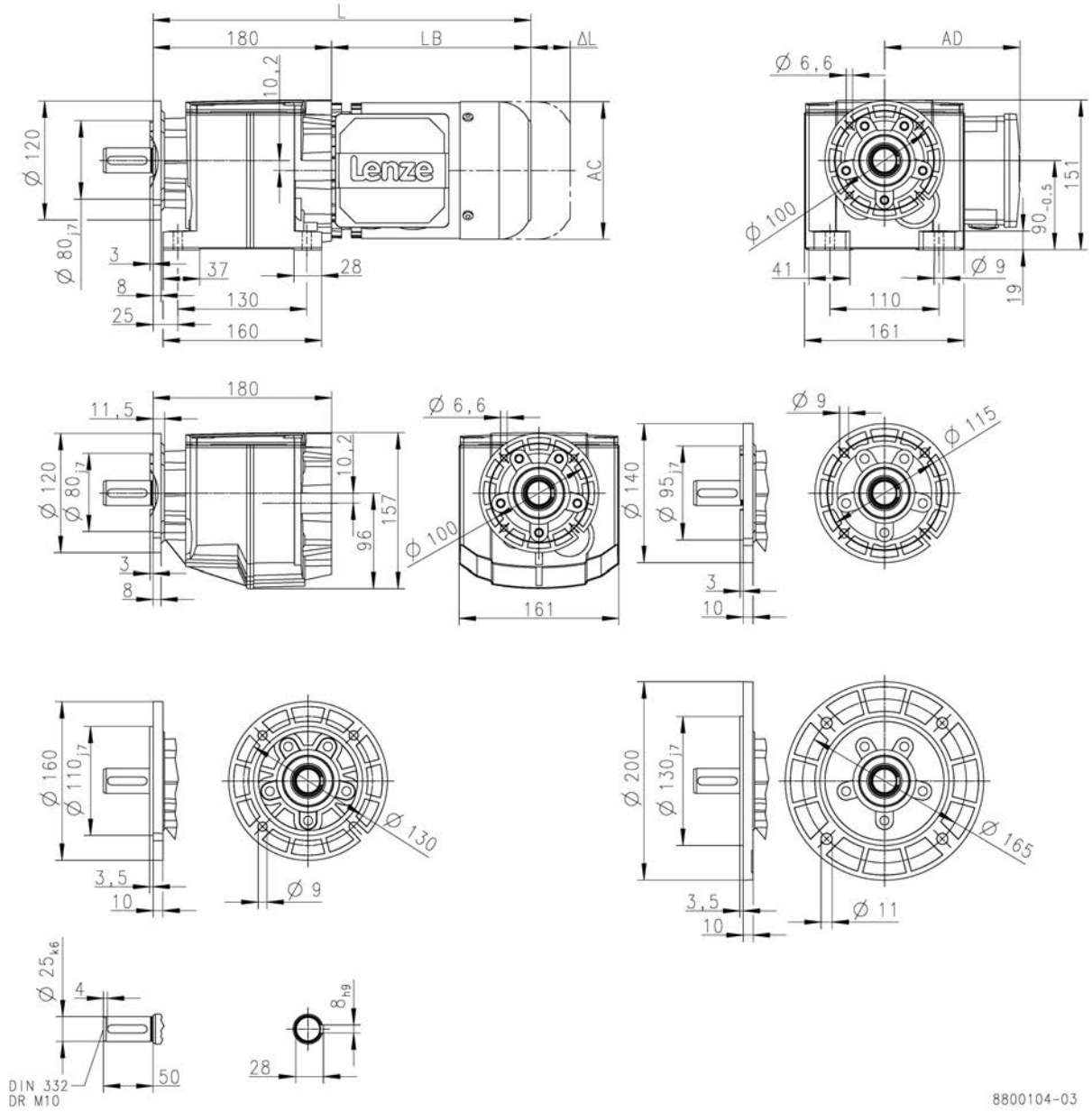

			m550				
			-P80/M4	-P90/M4	-P90/L4	-P100/M4	-P100/L4
Total length	L	[mm]	440	504		564	
Motor length	LB	[mm]	260	324		384	
Length of motor options	Δ L	[mm]	183	175		170	
Motor diameter	AC	[mm]	157	177		195	
Distance motor/connection	AD	[mm]	148	154		164	

L = length of the motor without built-on accessories
ΔL = additional length of the built-on accessories (longest type)

Dimensions, 4-pole motors

g500-H210

Dimensions with solid shaft and flange
Gearbox design: VCP

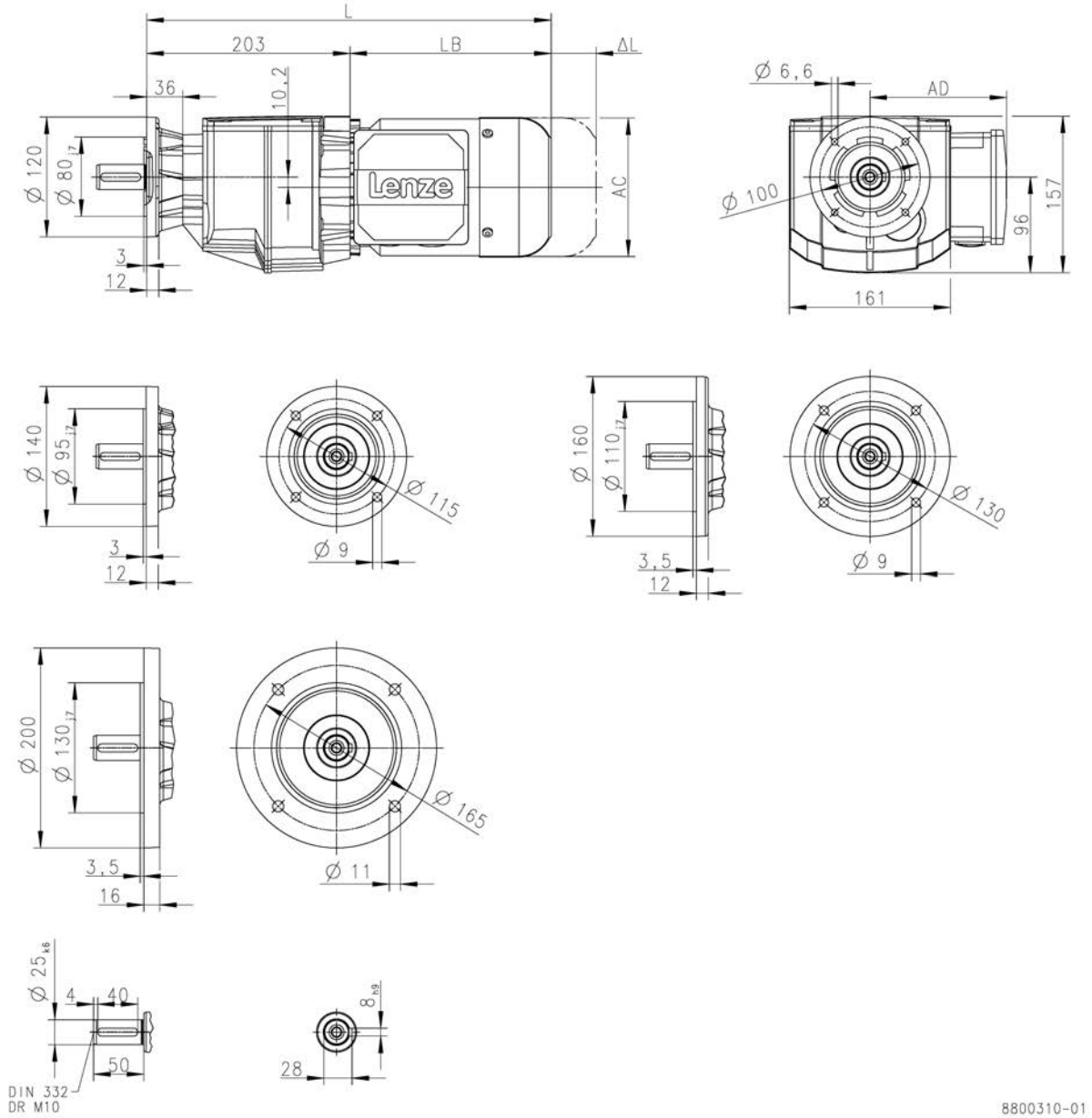

			MD□MA□□				
			063-12	063-32	063-42	071-32	071-42
Total length	L	[mm]	386			406	
Motor length	LB	[mm]	183			203	
Length of motor options	Δ L	[mm]	170			165	
Motor diameter	AC	[mm]	123			139	
Distance motor/connection	AD	[mm]	100			109	

L = length of the motor without built-on accessories
ΔL = additional length of the built-on accessories (longest type)

Dimensions, 4-pole motors

g500-H210

Dimensions with solid shaft and flange
Gearbox design: VCP

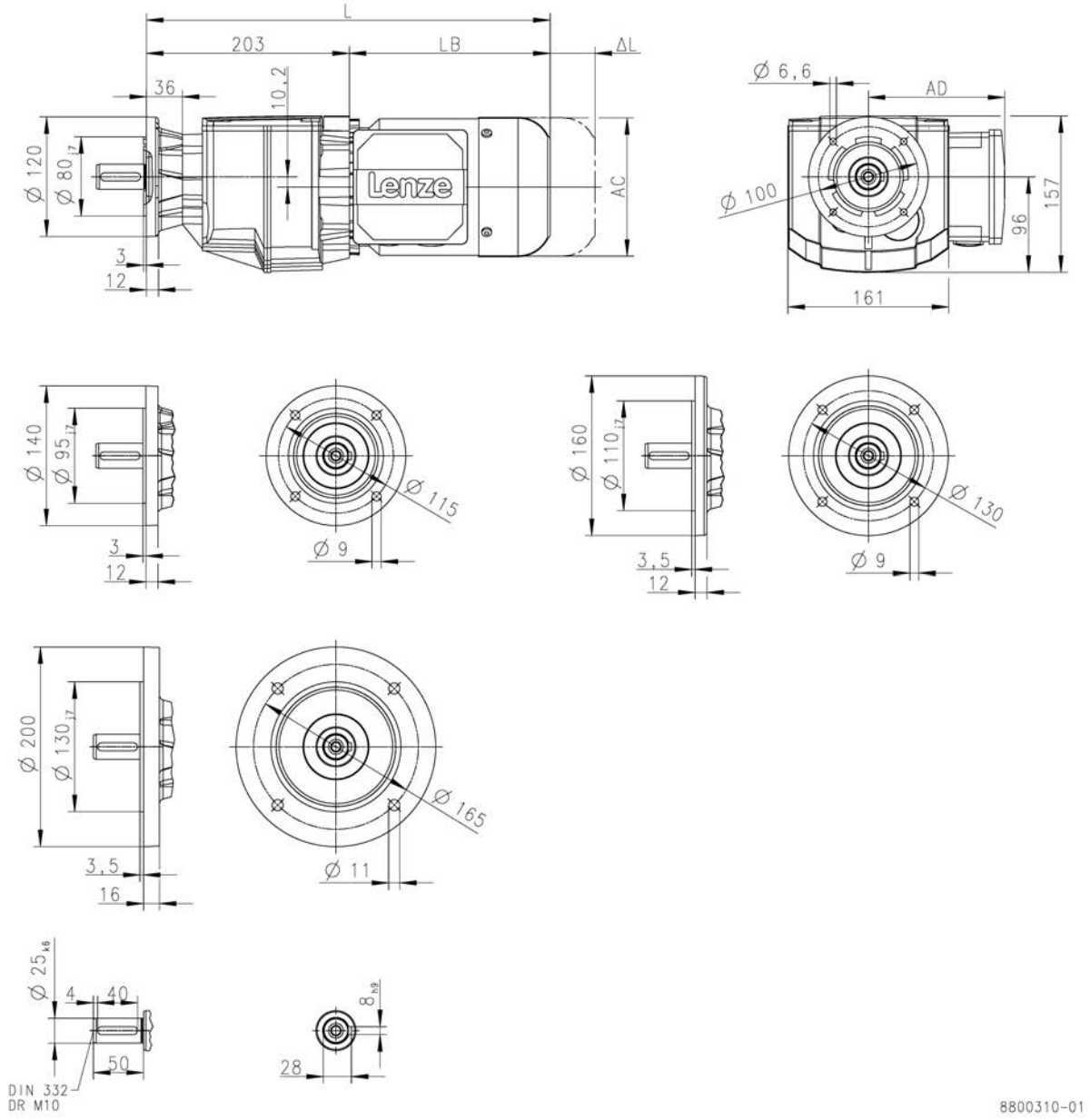

			m550				
			-P80/M4	-P90/M4	-P90/L4	-P100/M4	-P100/L4
Total length	L	[mm]	463	527		587	
Motor length	LB	[mm]	260	324		384	
Length of motor options	Δ L	[mm]	183	175		170	
Motor diameter	AC	[mm]	157	177		195	
Distance motor/connection	AD	[mm]	148	154		164	

L = length of the motor without built-on accessories
ΔL = additional length of the built-on accessories (longest type)

Dimensions, 4-pole motors

g500-H320

Dimensions with solid shaft
Gearbox design: VBR

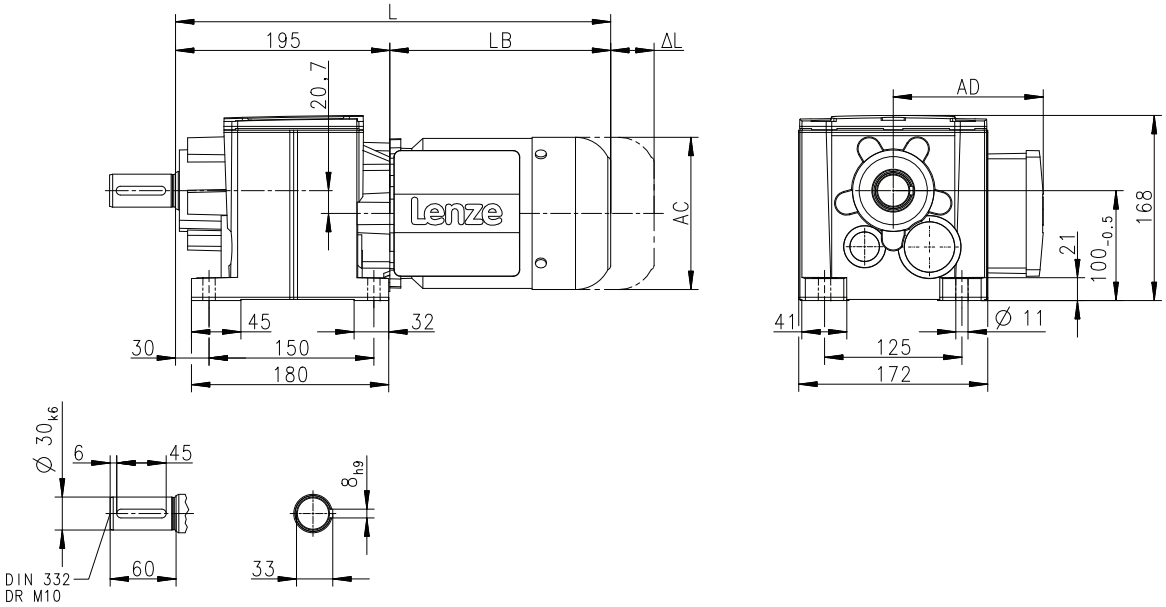

			MD□MA□□				
			063-12	063-32	063-42	071-32	071-42
Total length	L	[mm]	378			398	
Motor length	LB	[mm]	183			203	
Length of motor options	Δ L	[mm]	170			165	
Motor diameter	AC	[mm]	123			139	
Distance motor/connection	AD	[mm]	100			109	

L = length of the motor without built-on accessories
ΔL = additional length of the built-on accessories (longest type)

Dimensions, 4-pole motors

g500-H320

Dimensions with solid shaft
Gearbox design: VBR

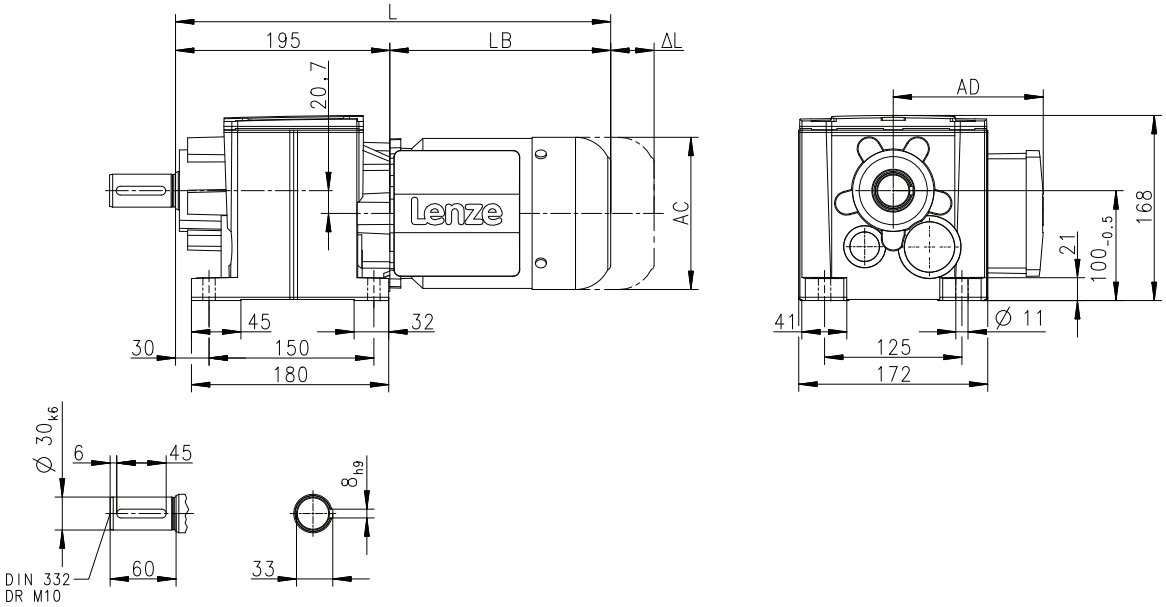

			m550					
			-P80/M4	-P90/M4	-P90/L4	-P100/M4	-P100/L4	-P112/M4
Total length	L	[mm]	455	519		579		586
Motor length	LB	[mm]	260	324		384		391
Length of motor options	Δ L	[mm]	183	175		170		183
Motor diameter	AC	[mm]	157	177		195		219
Distance motor/connection	AD	[mm]	148	154		164		171

L = length of the motor without built-on accessories
ΔL = additional length of the built-on accessories (longest type)

Dimensions, 4-pole motors

g500-H320

Dimensions with solid shaft and centering
Gearbox design: VAR, VCR

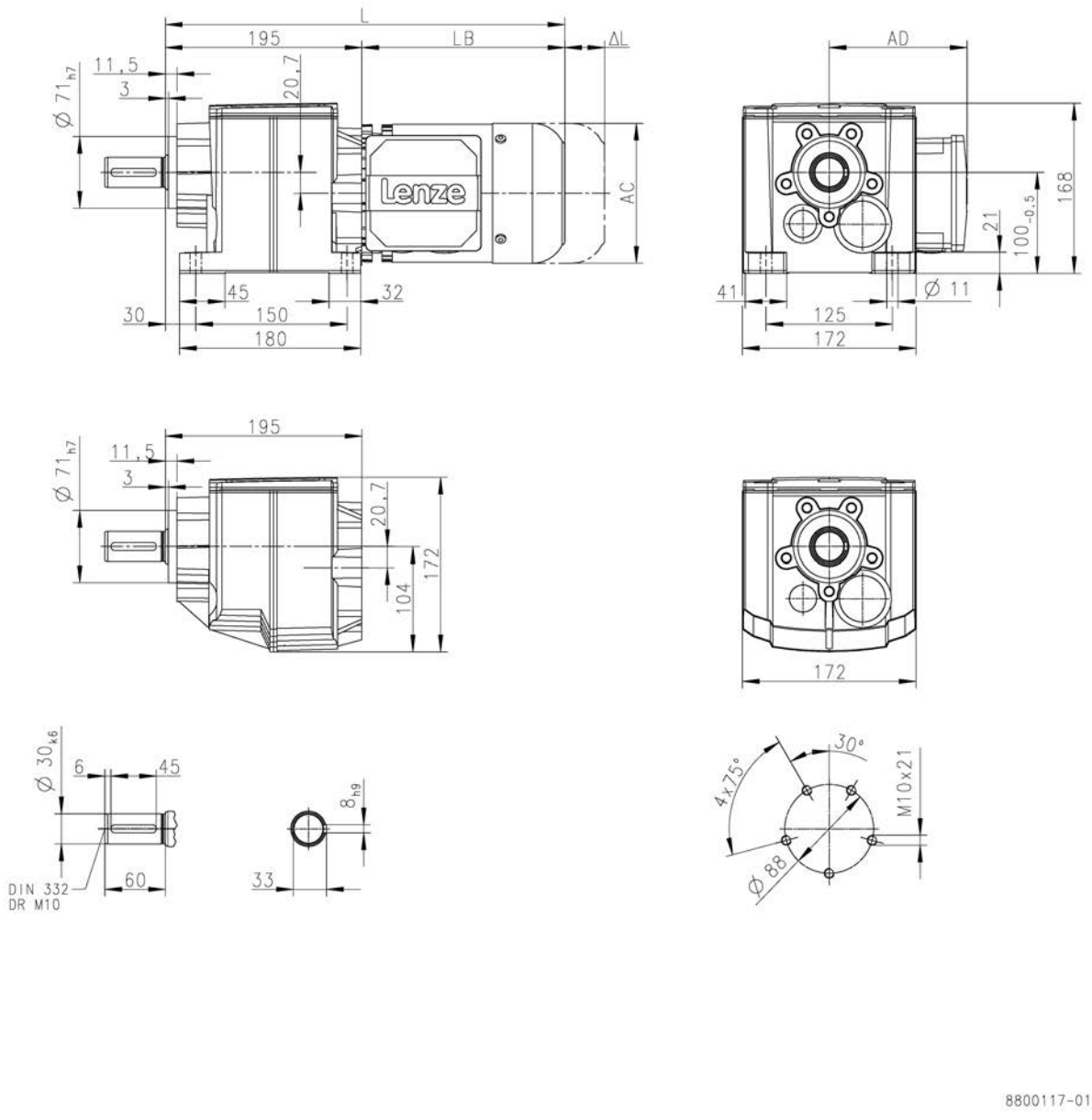

			MD□MA□□				
			063-12	063-32	063-42	071-32	071-42
Total length	L	[mm]	378			398	
Motor length	LB	[mm]	183			203	
Length of motor options	Δ L	[mm]	170			165	
Motor diameter	AC	[mm]	123			139	
Distance motor/connection	AD	[mm]	100			109	

L = length of the motor without built-on accessories
ΔL = additional length of the built-on accessories (longest type)

Dimensions, 4-pole motors

g500-H320

Dimensions with solid shaft and centering
Gearbox design: VAR, VCR

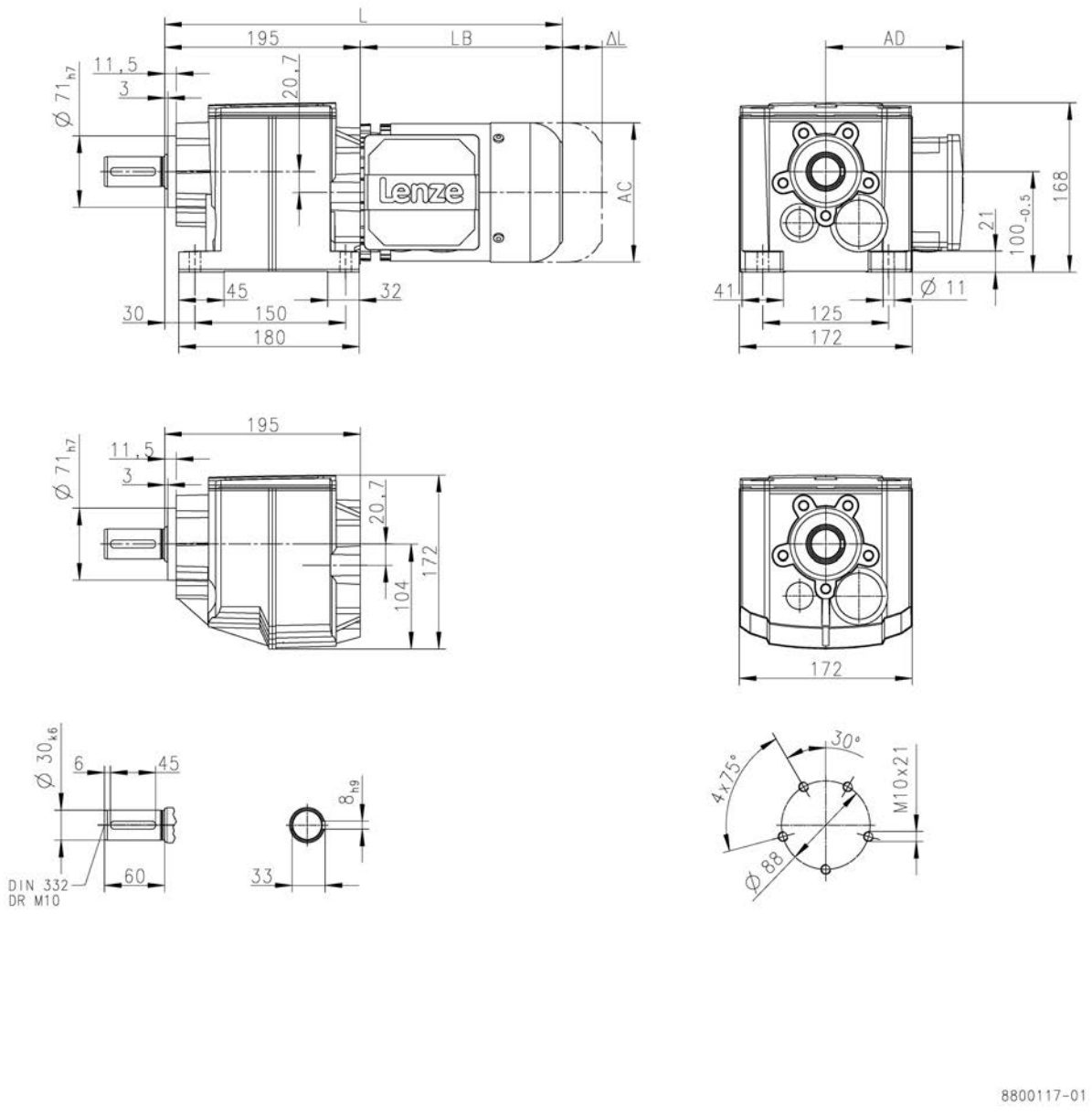

			m550					
			-P80/M4	-P90/M4	-P90/L4	-P100/M4	-P100/L4	-P112/M4
Total length	L	[mm]	455	519		579		586
Motor length	LB	[mm]	260	324		384		391
Length of motor options	Δ L	[mm]	183	175		170		183
Motor diameter	AC	[mm]	157	177		195		219
Distance motor/connection	AD	[mm]	148	154		164		171

L = length of the motor without built-on accessories
ΔL = additional length of the built-on accessories (longest type)

Dimensions, 4-pole motors

g500-H320

Dimensions with solid shaft and flange
Gearbox design: VAK, VCK

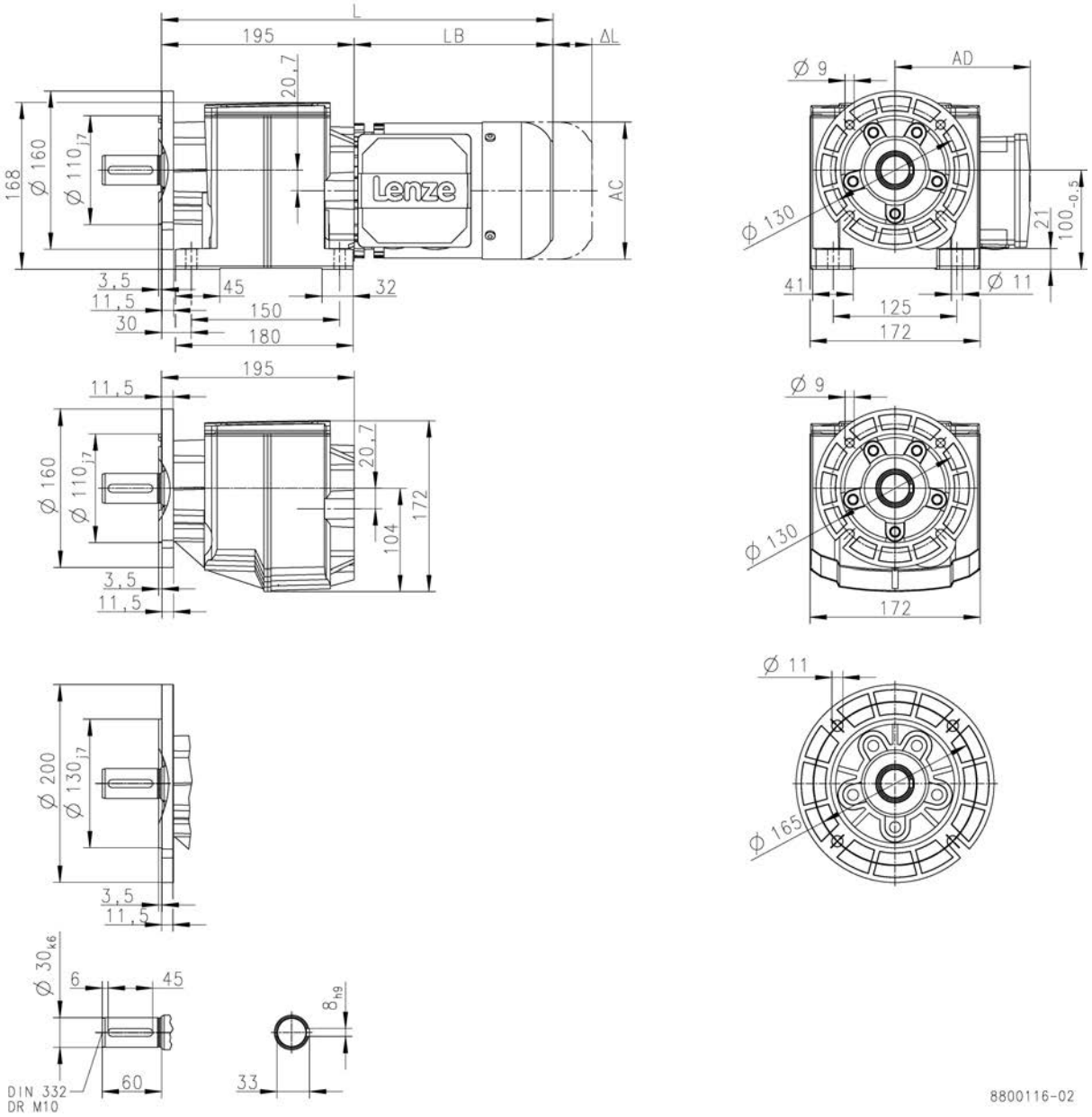

			MD□MA□□				
			063-12	063-32	063-42	071-32	071-42
Total length	L	[mm]	378			398	
Motor length	LB	[mm]	183			203	
Length of motor options	Δ L	[mm]	170			165	
Motor diameter	AC	[mm]	123			139	
Distance motor/connection	AD	[mm]	100			109	

L = length of the motor without built-on accessories
ΔL = additional length of the built-on accessories (longest type)

Dimensions, 4-pole motors

g500-H320

Dimensions with solid shaft and flange
Gearbox design: VAK, VCK

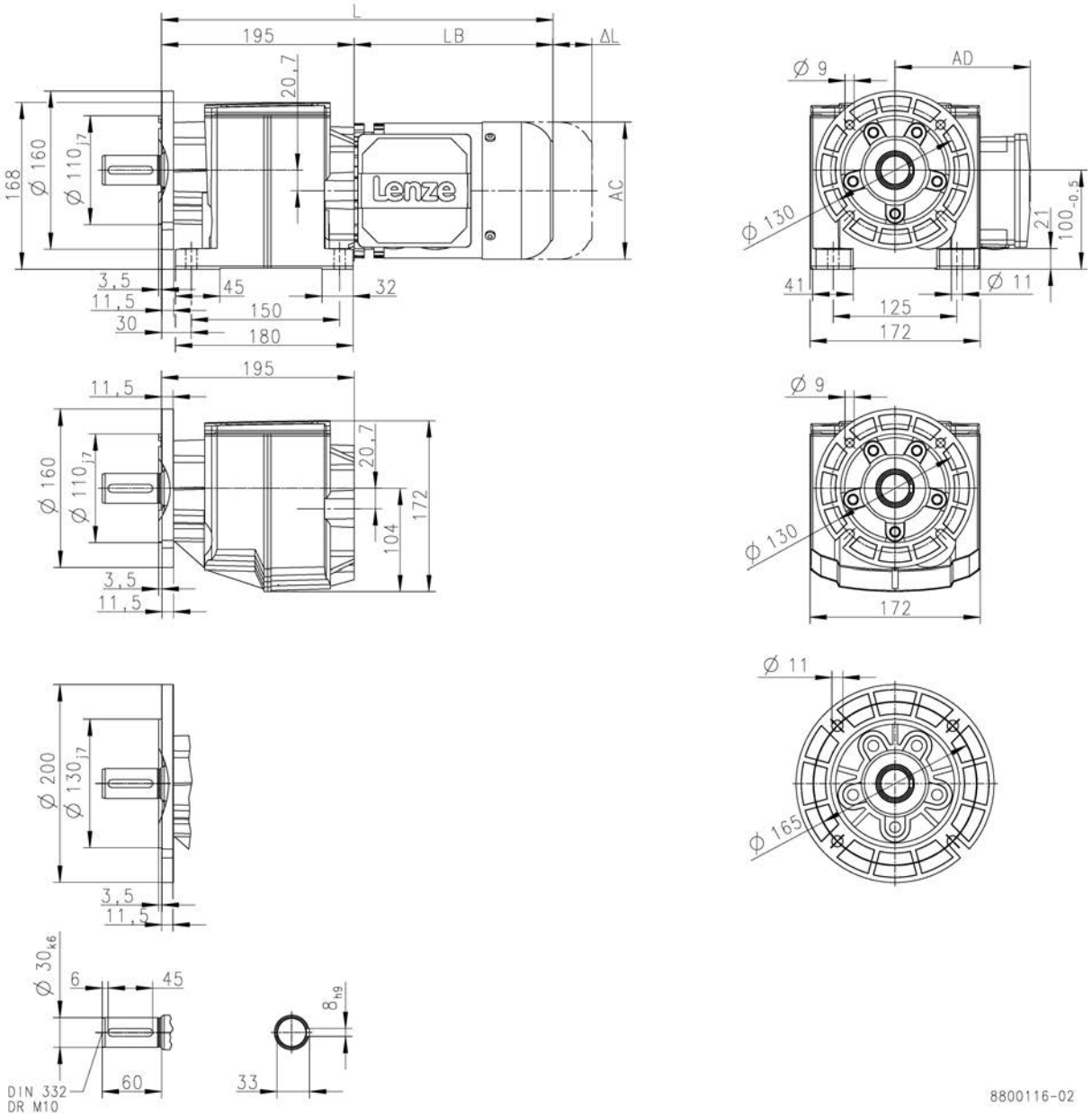

			m550					
			-P80/M4	-P90/M4	-P90/L4	-P100/M4	-P100/L4	-P112/M4
Total length	L	[mm]	455	519		579		586
Motor length	LB	[mm]	260	324		384		391
Length of motor options	Δ L	[mm]	183	175		170		183
Motor diameter	AC	[mm]	157	177		195		219
Distance motor/connection	AD	[mm]	148	154		164		171

L = length of the motor without built-on accessories
ΔL = additional length of the built-on accessories (longest type)

Dimensions, 4-pole motors

g500-H320

Dimensions with solid shaft and flange
Gearbox design: VCP

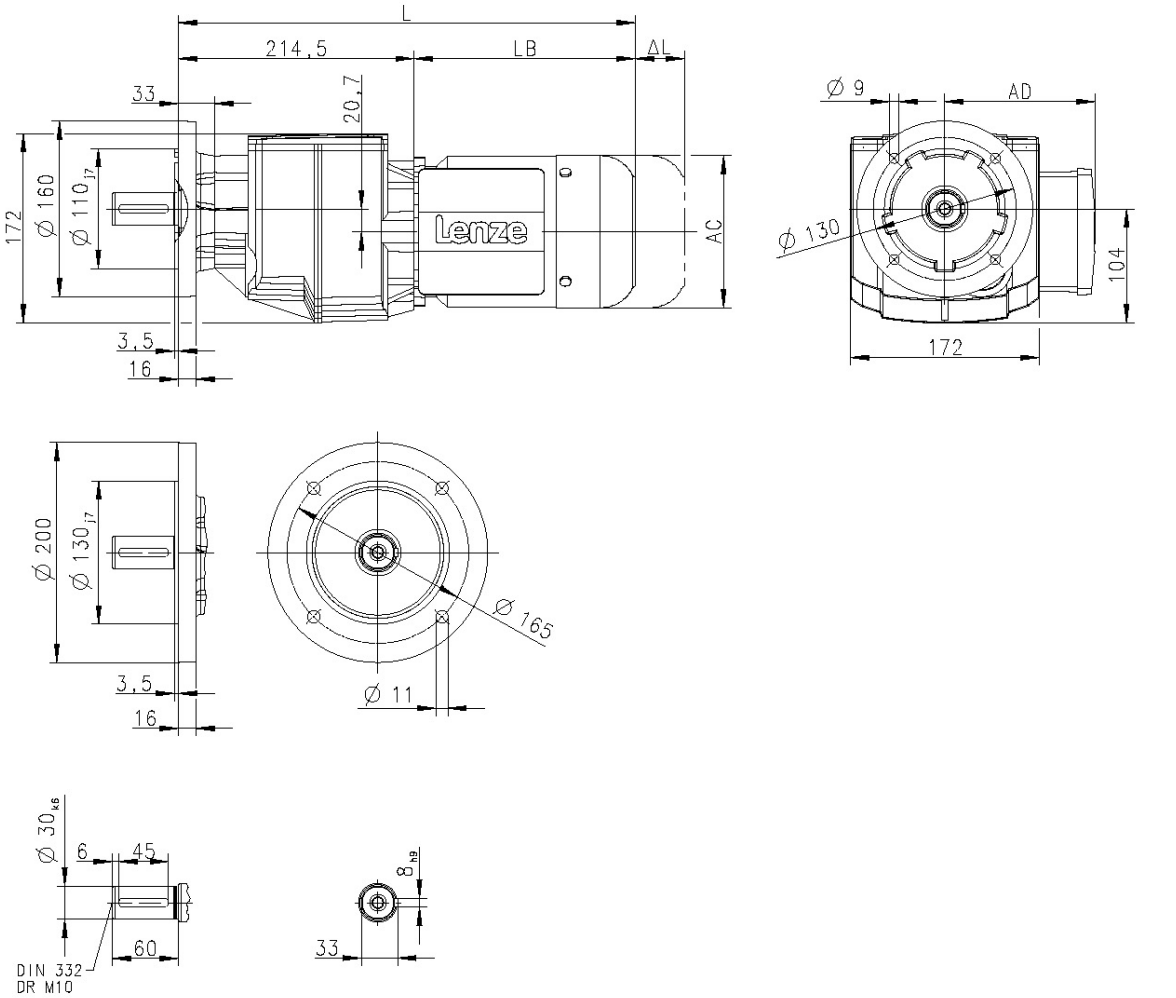

			MD□MA□□				
			063-12	063-32	063-42	071-32	071-42
Total length	L	[mm]	398			418	
Motor length	LB	[mm]	183			203	
Length of motor options	Δ L	[mm]	170			165	
Motor diameter	AC	[mm]	123			139	
Distance motor/connection	AD	[mm]	100			109	

L = length of the motor without built-on accessories
ΔL = additional length of the built-on accessories (longest type)

Dimensions, 4-pole motors

g500-H320

Dimensions with solid shaft and flange
Gearbox design: VCP

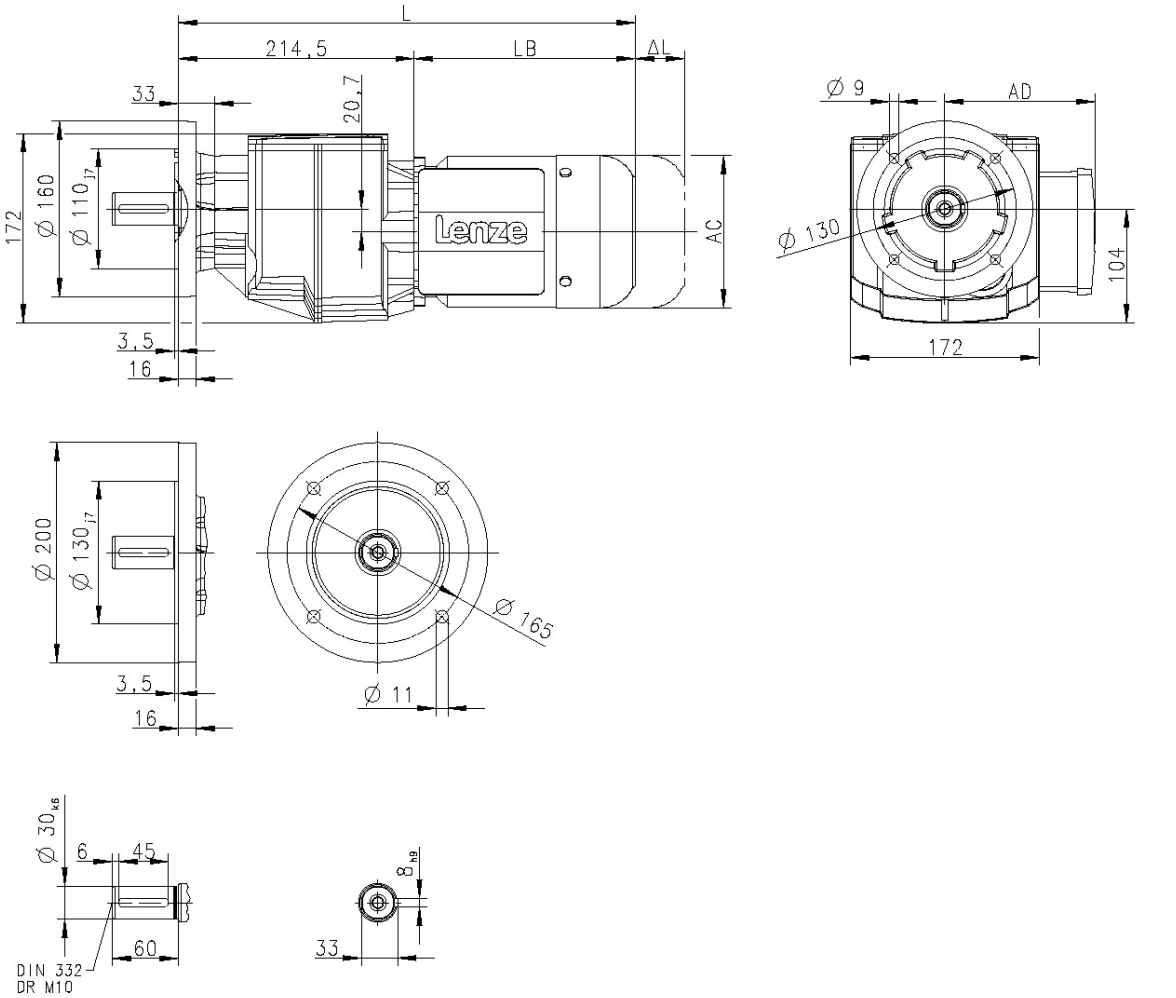

			m550					
			-P80/M4	-P90/M4	-P90/L4	-P100/M4	-P100/L4	-P112/M4
Total length	L	[mm]	475	539		599		606
Motor length	LB	[mm]	260	324		384		391
Length of motor options	Δ L	[mm]	183	175		170		183
Motor diameter	AC	[mm]	157	177		195		219
Distance motor/connection	AD	[mm]	148	154		164		171

L = length of the motor without built-on accessories
ΔL = additional length of the built-on accessories (longest type)

Dimensions, 4-pole motors

g500-H450

Dimensions with solid shaft
Gearbox design: VBR

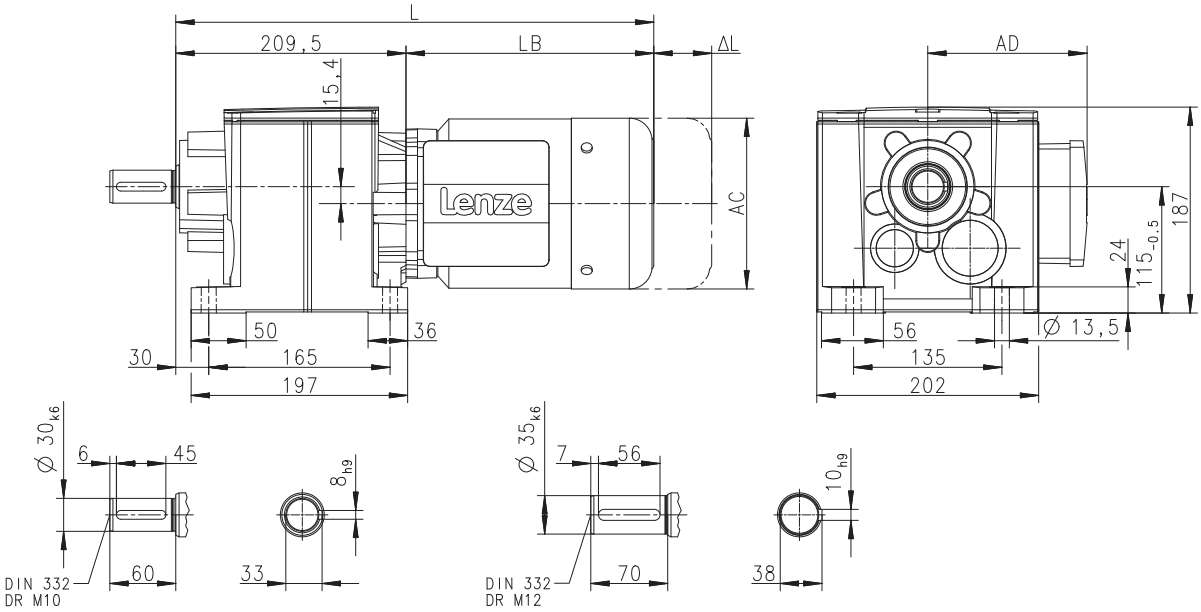

			MD□MA□□				
			063-12	063-32	063-42	071-32	071-42
Total length	L	[mm]	393			413	
Motor length	LB	[mm]	183			203	
Length of motor options	Δ L	[mm]	170			165	
Motor diameter	AC	[mm]	123			139	
Distance motor/connection	AD	[mm]	100			109	

L = length of the motor without built-on accessories
ΔL = additional length of the built-on accessories (longest type)

Dimensions, 4-pole motors

g500-H450

Dimensions with solid shaft
Gearbox design: VBR

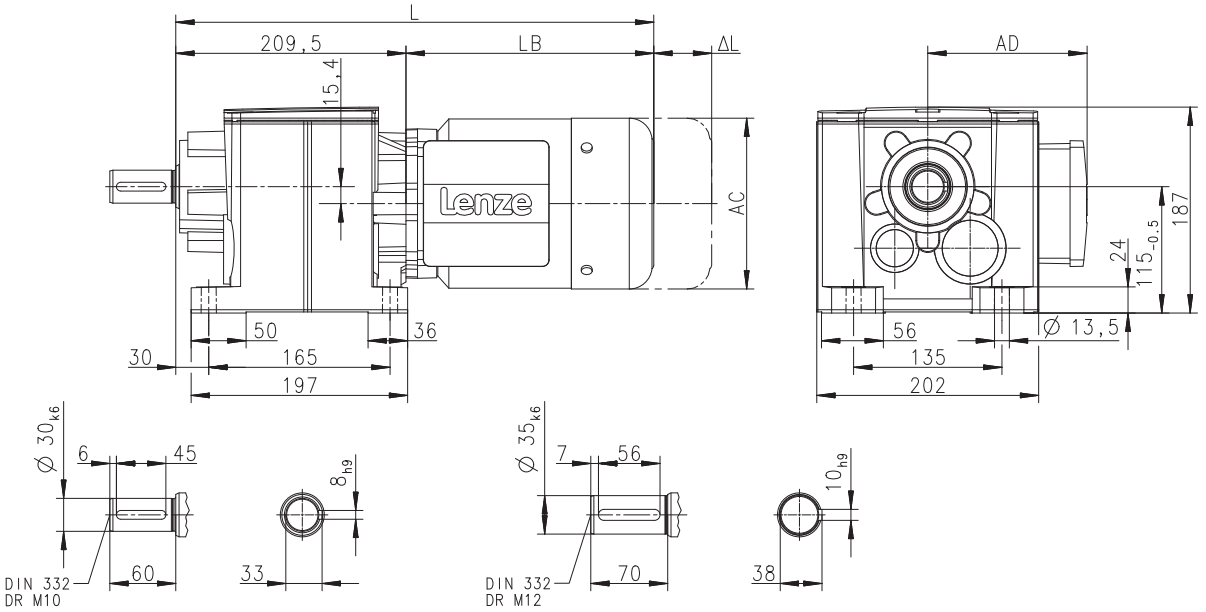

			m550							
			-P80/M4	-P90/M4	-P90/L4	-P100/M4	-P100/L4	-P112/M4	-P132/M4	-P132/L4
Total length	L	[mm]	470	534		594		601	668	
Motor length	LB	[mm]	260	324		384		391	458	
Length of motor options	Δ L	[mm]	183	175		170		183	201	
Motor diameter	AC	[mm]	157	177		195		219	261	
Distance motor/connection	AD	[mm]	148	154		164		171	182	

L = length of the motor without built-on accessories
ΔL = additional length of the built-on accessories (longest type)

Dimensions, 4-pole motors

g500-H450

Dimensions with solid shaft and centering
Gearbox design: VAR, VCR

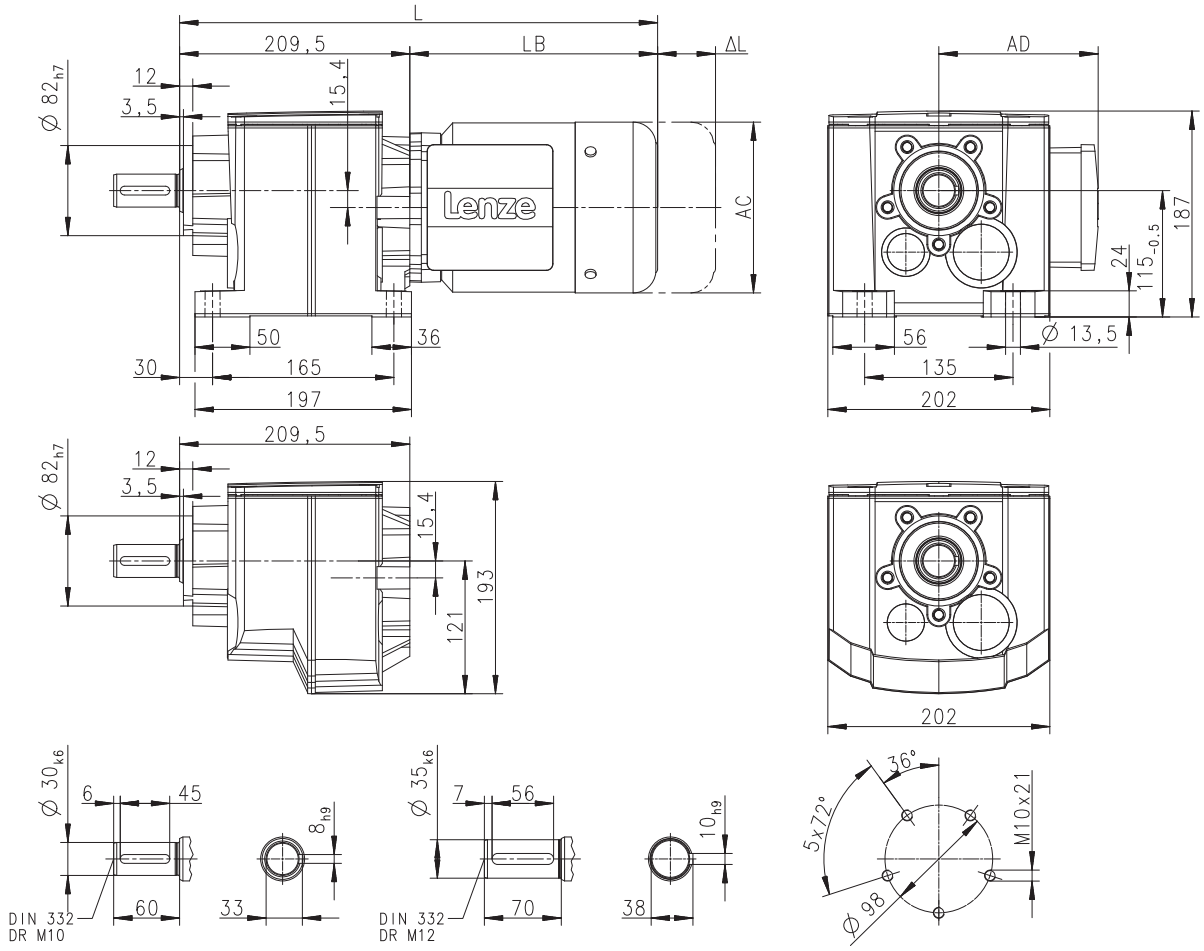

			MD□MA□□				
			063-12	063-32	063-42	071-32	071-42
Total length	L	[mm]	393			413	
Motor length	LB	[mm]	183			203	
Length of motor options	Δ L	[mm]	170			165	
Motor diameter	AC	[mm]	123			139	
Distance motor/connection	AD	[mm]	100			109	

L = length of the motor without built-on accessories
ΔL = additional length of the built-on accessories (longest type)

Dimensions, 4-pole motors

g500-H450

Dimensions with solid shaft and centering
Gearbox design: VAR, VCR

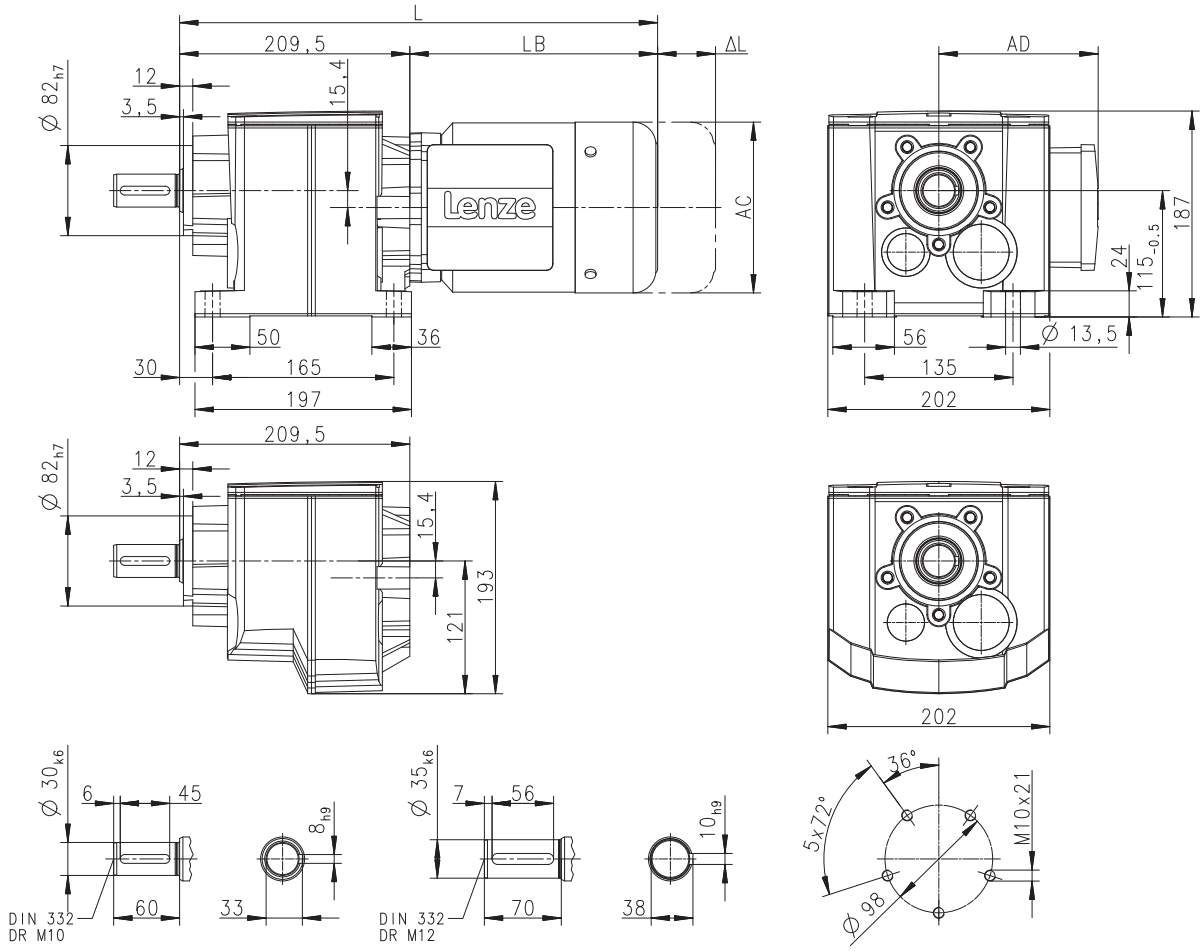

			m550							
			-P80/M4	-P90/M4	-P90/L4	-P100/M4	-P100/L4	-P112/M4	-P132/M4	-P132/L4
Total length	L	[mm]	470	534		594		601	668	
Motor length	LB	[mm]	260	324		384		391	458	
Length of motor options	Δ L	[mm]	183	175		170		183	201	
Motor diameter	AC	[mm]	157	177		195		219	261	
Distance motor/connection	AD	[mm]	148	154		164		171	182	

L = length of the motor without built-on accessories
ΔL = additional length of the built-on accessories (longest type)

Dimensions, 4-pole motors

g500-H450

Dimensions with solid shaft and flange
Gearbox design: VAK, VCK

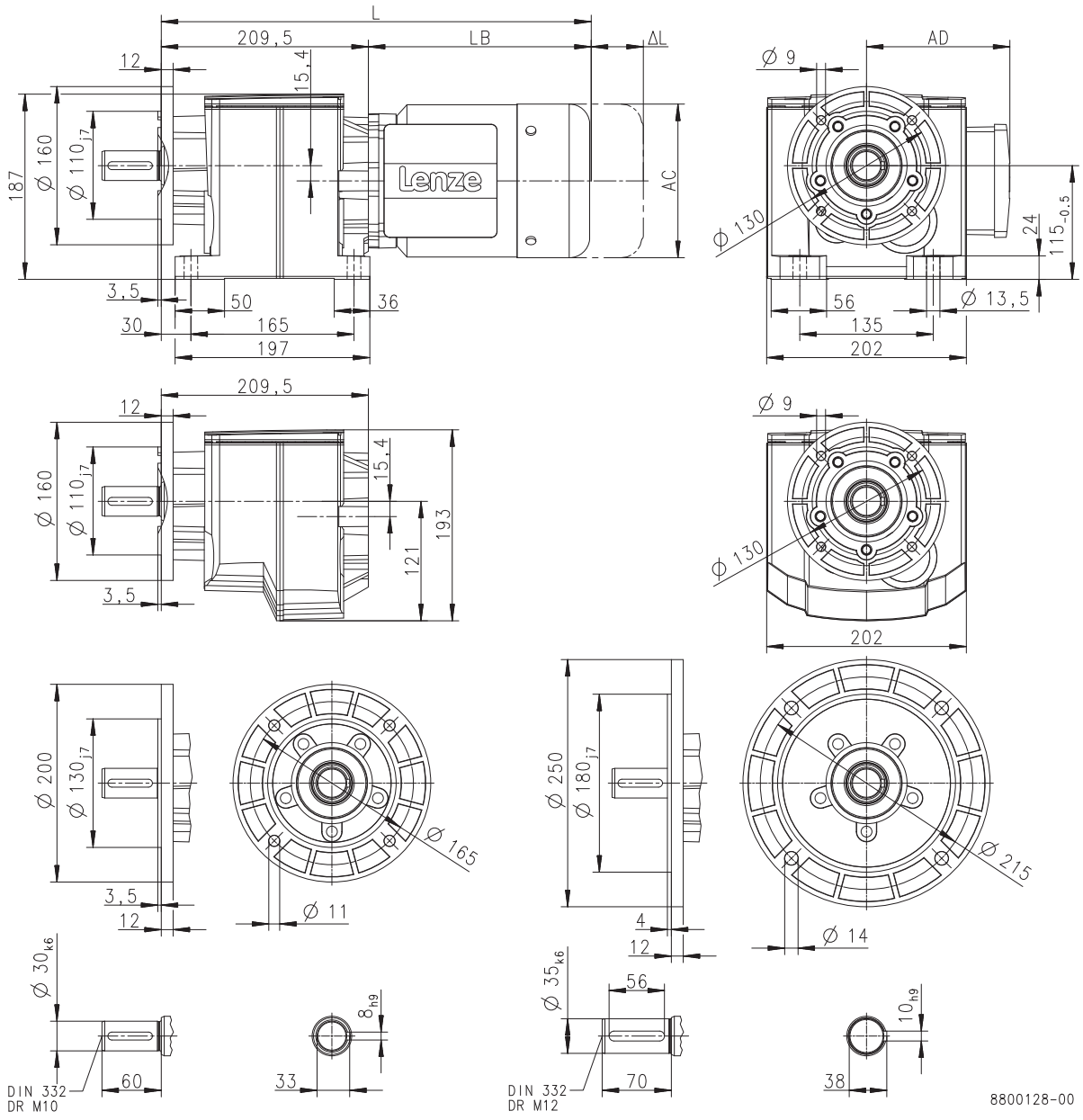

			MD□MA□□				
			063-12	063-32	063-42	071-32	071-42
Total length	L	[mm]	393			413	
Motor length	LB	[mm]	183			203	
Length of motor options	Δ L	[mm]	170			165	
Motor diameter	AC	[mm]	123			139	
Distance motor/connection	AD	[mm]	100			109	

L = length of the motor without built-on accessories
ΔL = additional length of the built-on accessories (longest type)

Dimensions, 4-pole motors

g500-H450

Dimensions with solid shaft and flange
Gearbox design: VAK, VCK

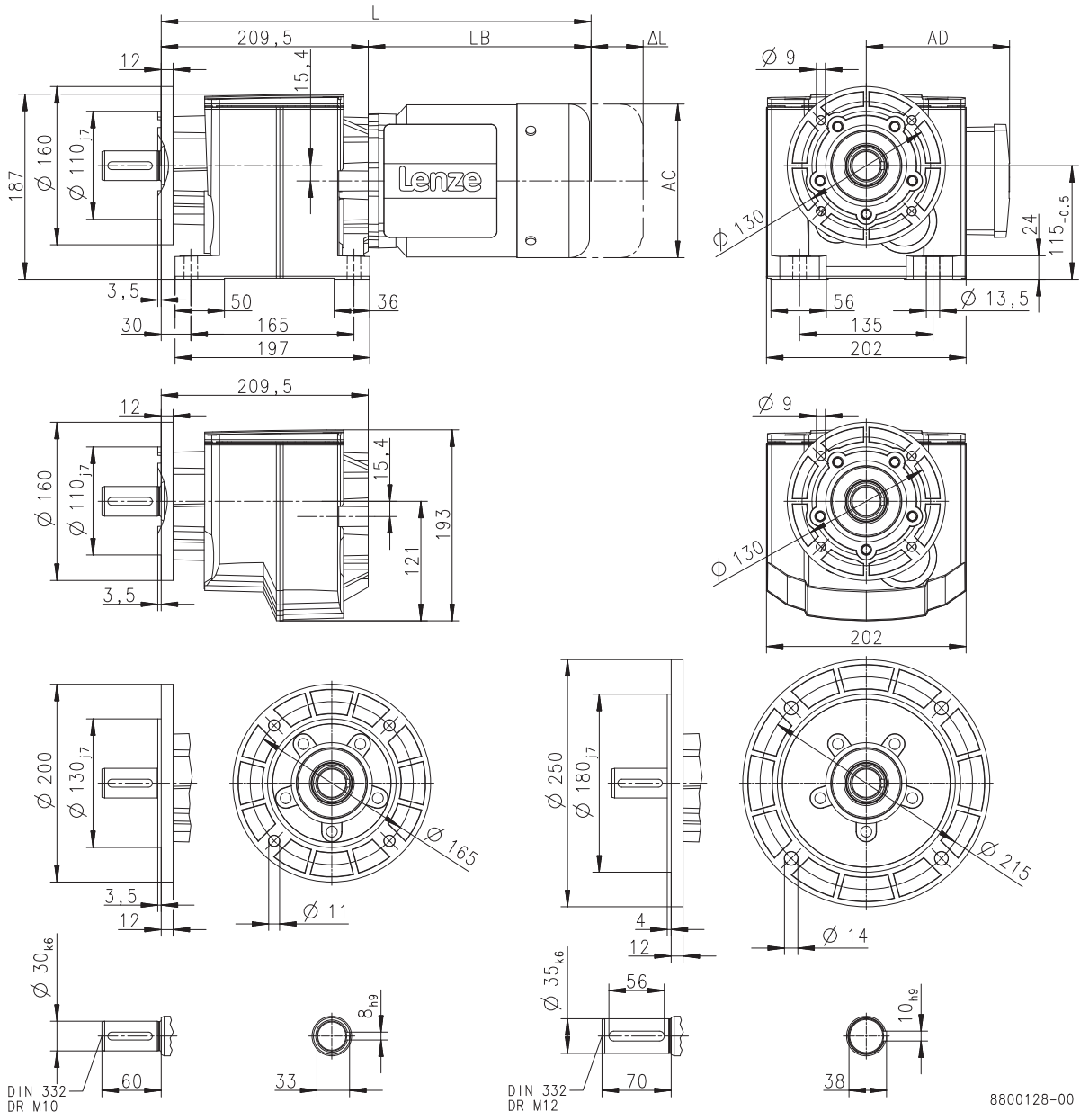

			m550							
			-P80/M4	-P90/M4	-P90/L4	-P100/M4	-P100/L4	-P112/M4	-P132/M4	-P132/L4
Total length	L	[mm]	470	534		594		601	668	
Motor length	LB	[mm]	260	324		384		391	458	
Length of motor options	Δ L	[mm]	183	175		170		183	201	
Motor diameter	AC	[mm]	157	177		195		219	261	
Distance motor/connection	AD	[mm]	148	154		164		171	182	

L = length of the motor without built-on accessories
ΔL = additional length of the built-on accessories (longest type)

Dimensions, 4-pole motors

g500-H450

Dimensions with solid shaft and flange
Gearbox design: VCP

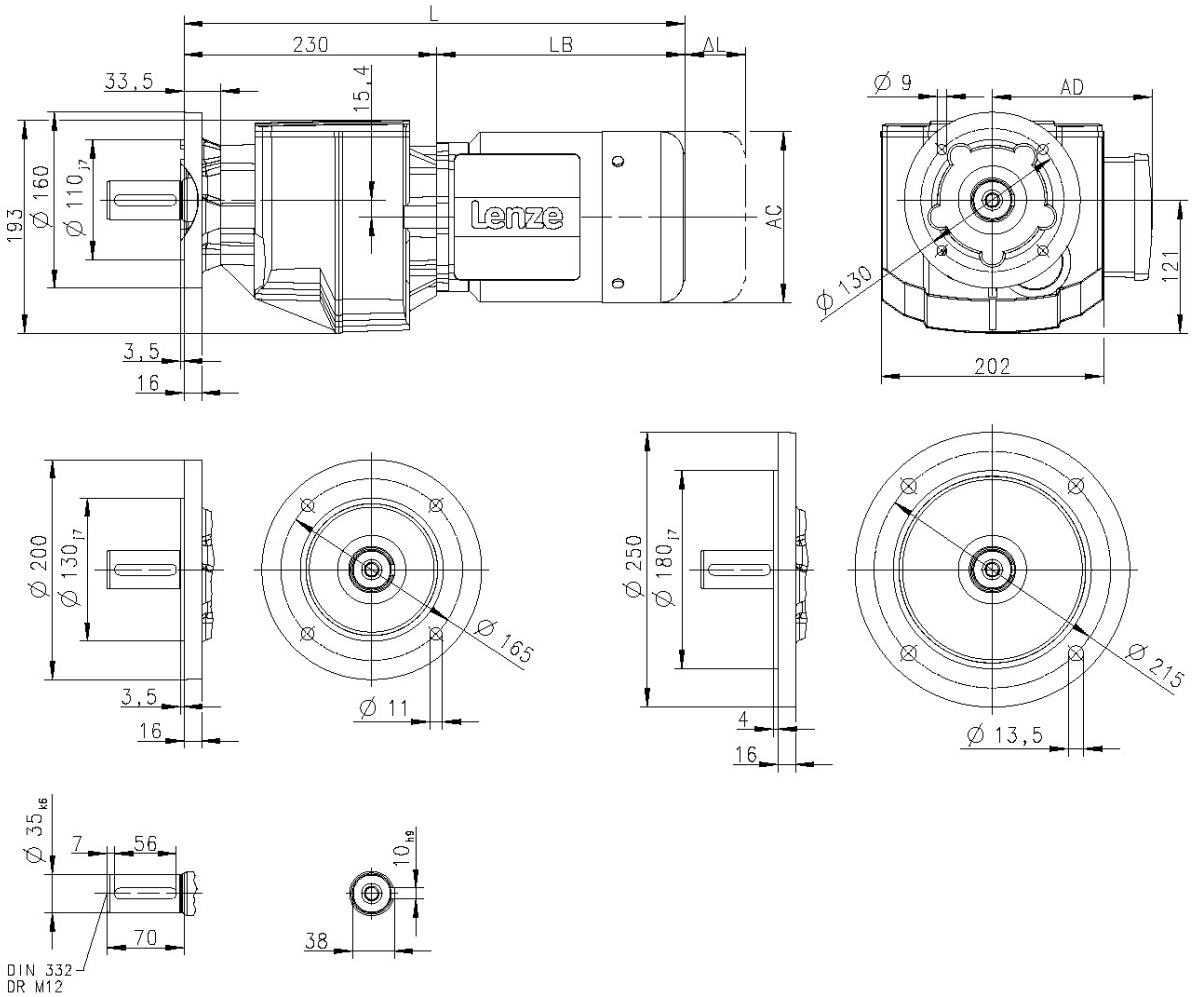

			MD□MA□□				
			063-12	063-32	063-42	071-32	071-42
Total length	L	[mm]	413			433	
Motor length	LB	[mm]	183			203	
Length of motor options	Δ L	[mm]	170			165	
Motor diameter	AC	[mm]	123			139	
Distance motor/connection	AD	[mm]	100			109	

L = length of the motor without built-on accessories
ΔL = additional length of the built-on accessories (longest type)

Dimensions, 4-pole motors

g500-H450

Dimensions with solid shaft and flange
Gearbox design: VCP

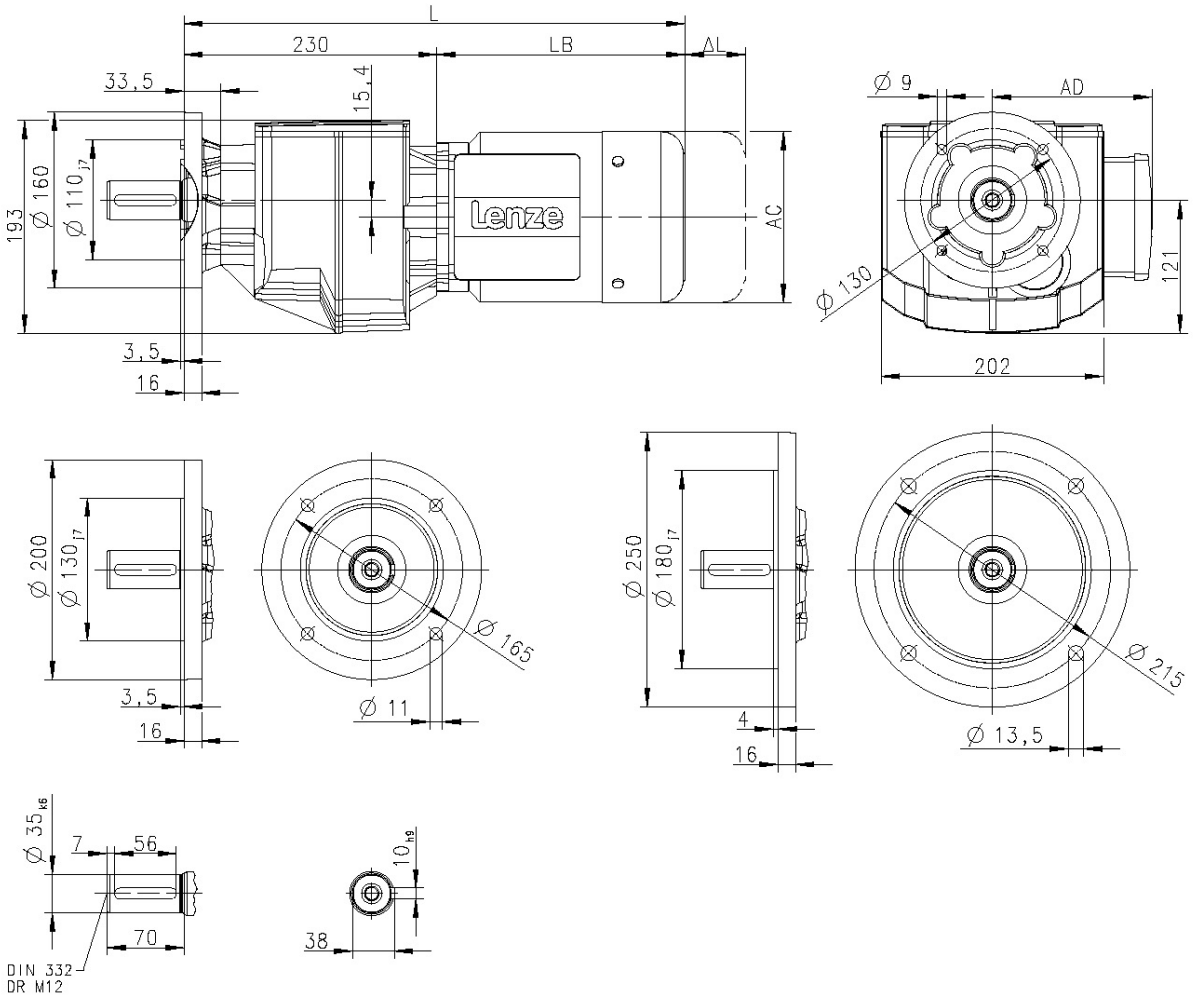

			m550							
			-P80/M4	-P90/M4	-P90/L4	-P100/M4	-P100/L4	-P112/M4	-P132/M4	-P132/L4
Total length	L	[mm]	490	554		614		621	688	
Motor length	LB	[mm]	260	324		384		391	458	
Length of motor options	Δ L	[mm]	183	175		170		183	201	
Motor diameter	AC	[mm]	157	177		195		219	261	
Distance motor/connection	AD	[mm]	148	154		164		171	182	

L = length of the motor without built-on accessories
ΔL = additional length of the built-on accessories (longest type)

Dimensions, 4-pole motors

g500-H600

Dimensions with solid shaft
Gearbox design: VBR

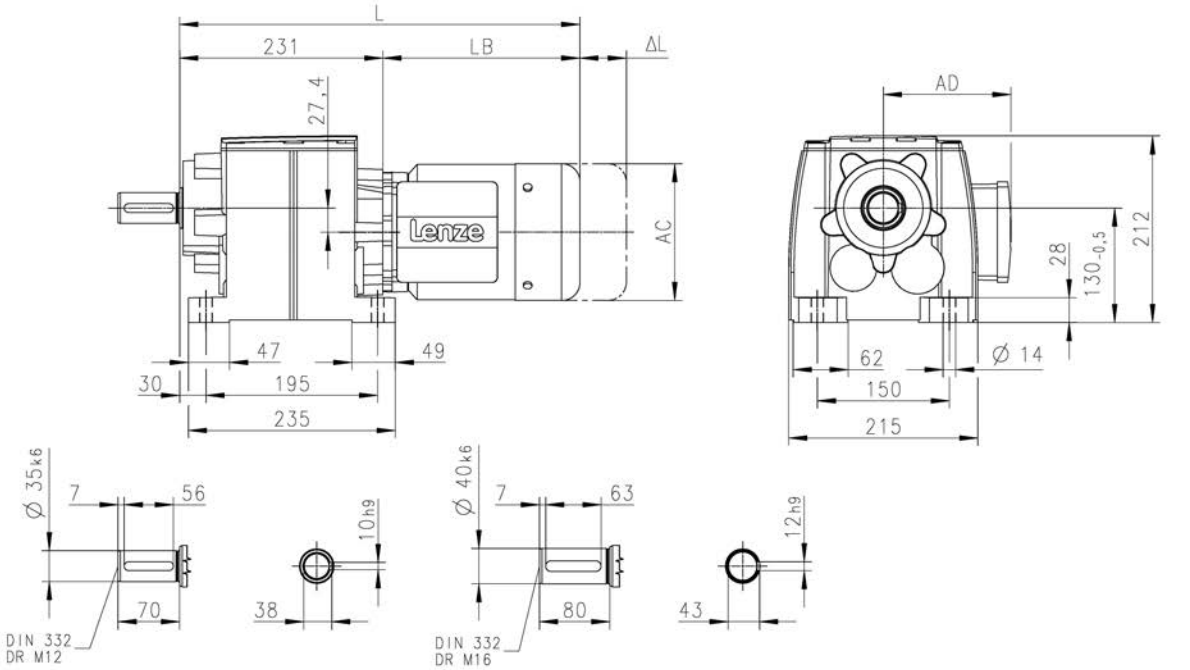

			MD□MA□□				
			063-12	063-32	063-42	071-32	071-42
Total length	L	[mm]	414			434	
Motor length	LB	[mm]	183			203	
Length of motor options	Δ L	[mm]	170			165	
Motor diameter	AC	[mm]	123			139	
Distance motor/connection	AD	[mm]	100			109	

L = length of the motor without built-on accessories
ΔL = additional length of the built-on accessories (longest type)

Dimensions, 4-pole motors

g500-H600

Dimensions with solid shaft
Gearbox design: VBR

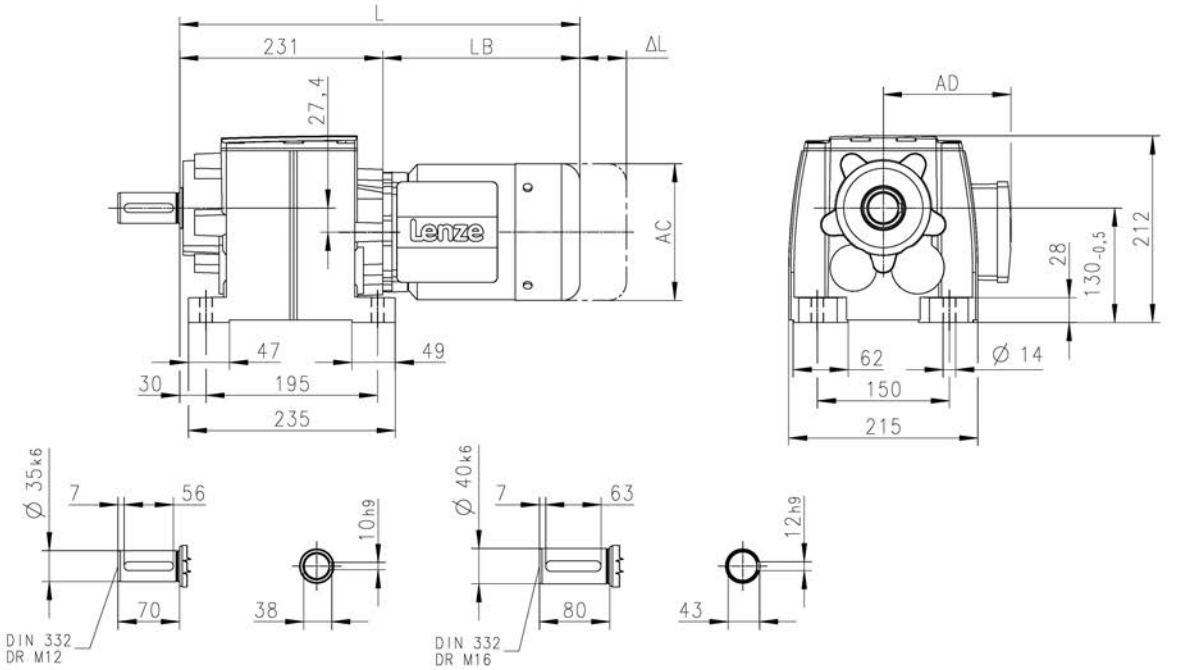

			m550							
			-P80/M4	-P90/M4	-P90/L4	-P100/M4	-P100/L4	-P112/M4	-P132/M4	-P132/L4
Total length	L	[mm]	491	555		615		622	689	
Motor length	LB	[mm]	260	324		384		391	458	
Length of motor options	Δ L	[mm]	183	175		170		183	201	
Motor diameter	AC	[mm]	157	177		195		219	261	
Distance motor/connection	AD	[mm]	148	154		164		171	182	

L = length of the motor without built-on accessories
ΔL = additional length of the built-on accessories (longest type)

Dimensions, 4-pole motors

g500-H600

Dimensions with solid shaft and centering
Gearbox design: VAR, VCR

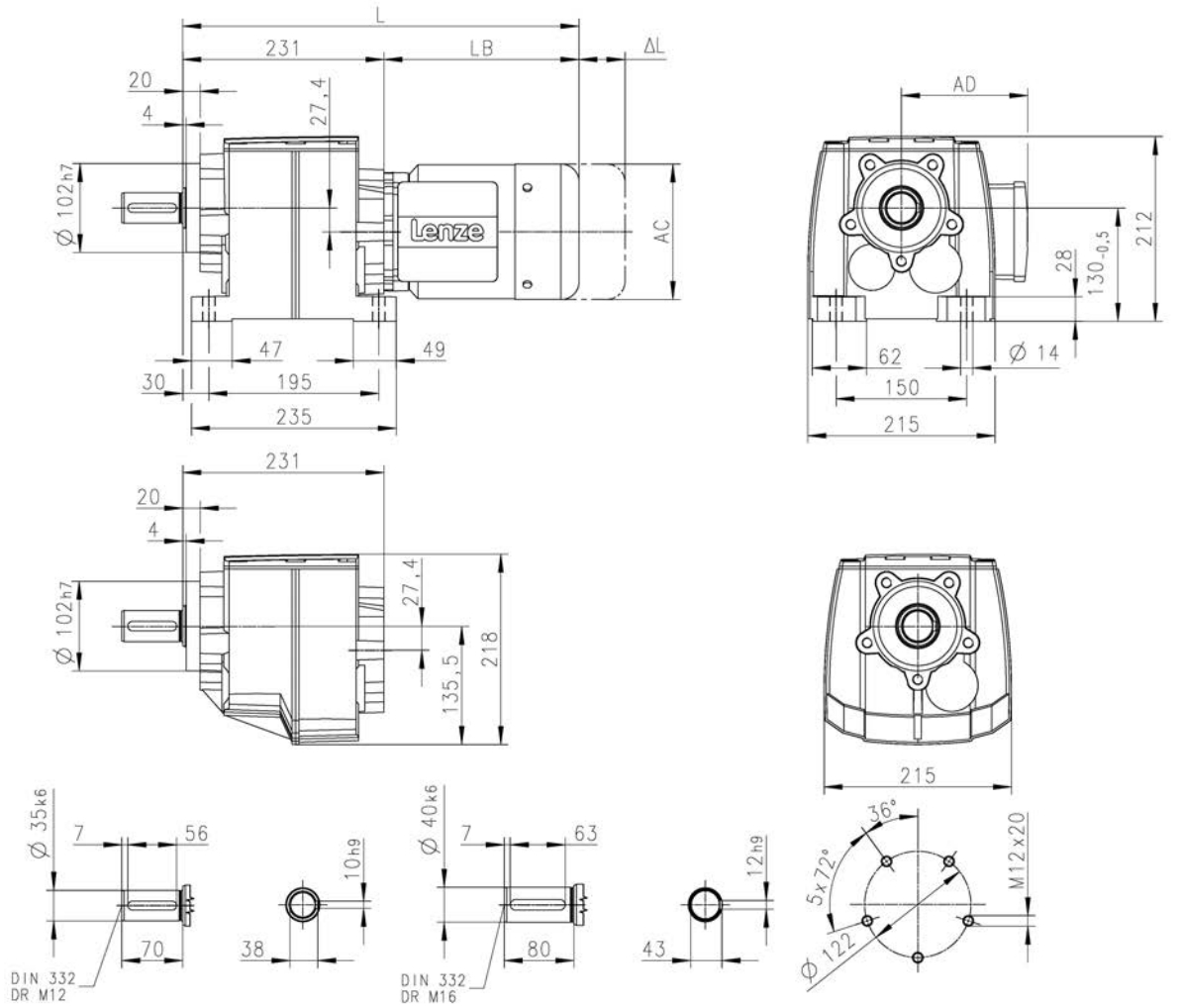

			MD□MA□□				
			063-12	063-32	063-42	071-32	071-42
Total length	L	[mm]	414			434	
Motor length	LB	[mm]	183			203	
Length of motor options	Δ L	[mm]	170			165	
Motor diameter	AC	[mm]	123			139	
Distance motor/connection	AD	[mm]	100			109	

L = length of the motor without built-on accessories
ΔL = additional length of the built-on accessories (longest type)

Dimensions, 4-pole motors

g500-H600

Dimensions with solid shaft and centering
Gearbox design: VAR, VCR

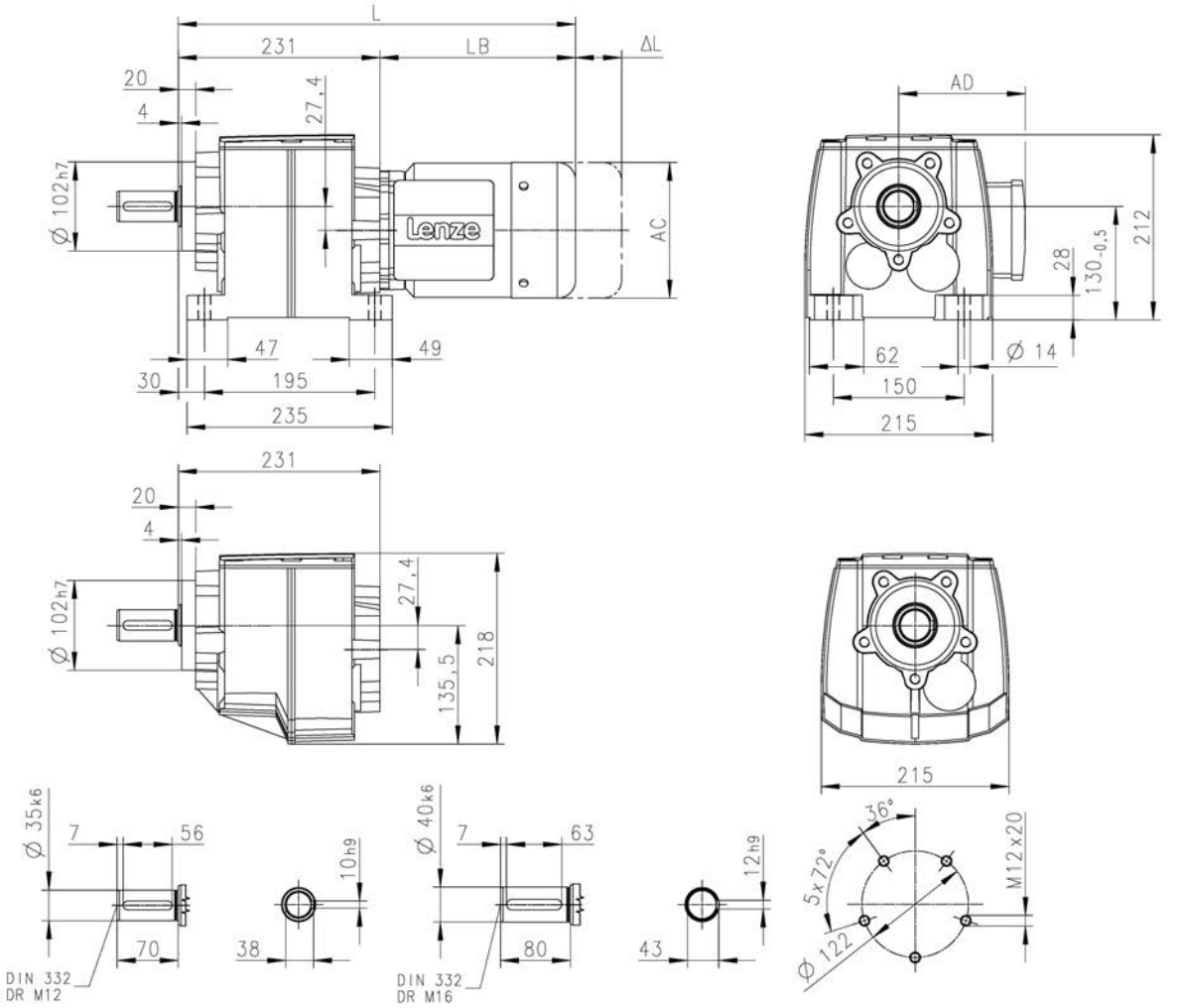

			m550							
			-P80/M4	-P90/M4	-P90/L4	-P100/M4	-P100/L4	-P112/M4	-P132/M4	-P132/L4
Total length	L	[mm]	491	555		615		622	689	
Motor length	LB	[mm]	260	324		384		391	458	
Length of motor options	Δ L	[mm]	183	175		170		183	201	
Motor diameter	AC	[mm]	157	177		195		219	261	
Distance motor/connection	AD	[mm]	148	154		164		171	182	

L = length of the motor without built-on accessories
ΔL = additional length of the built-on accessories (longest type)

Dimensions, 4-pole motors

g500-H600

Dimensions with solid shaft and flange
Gearbox design: VAK, VCK

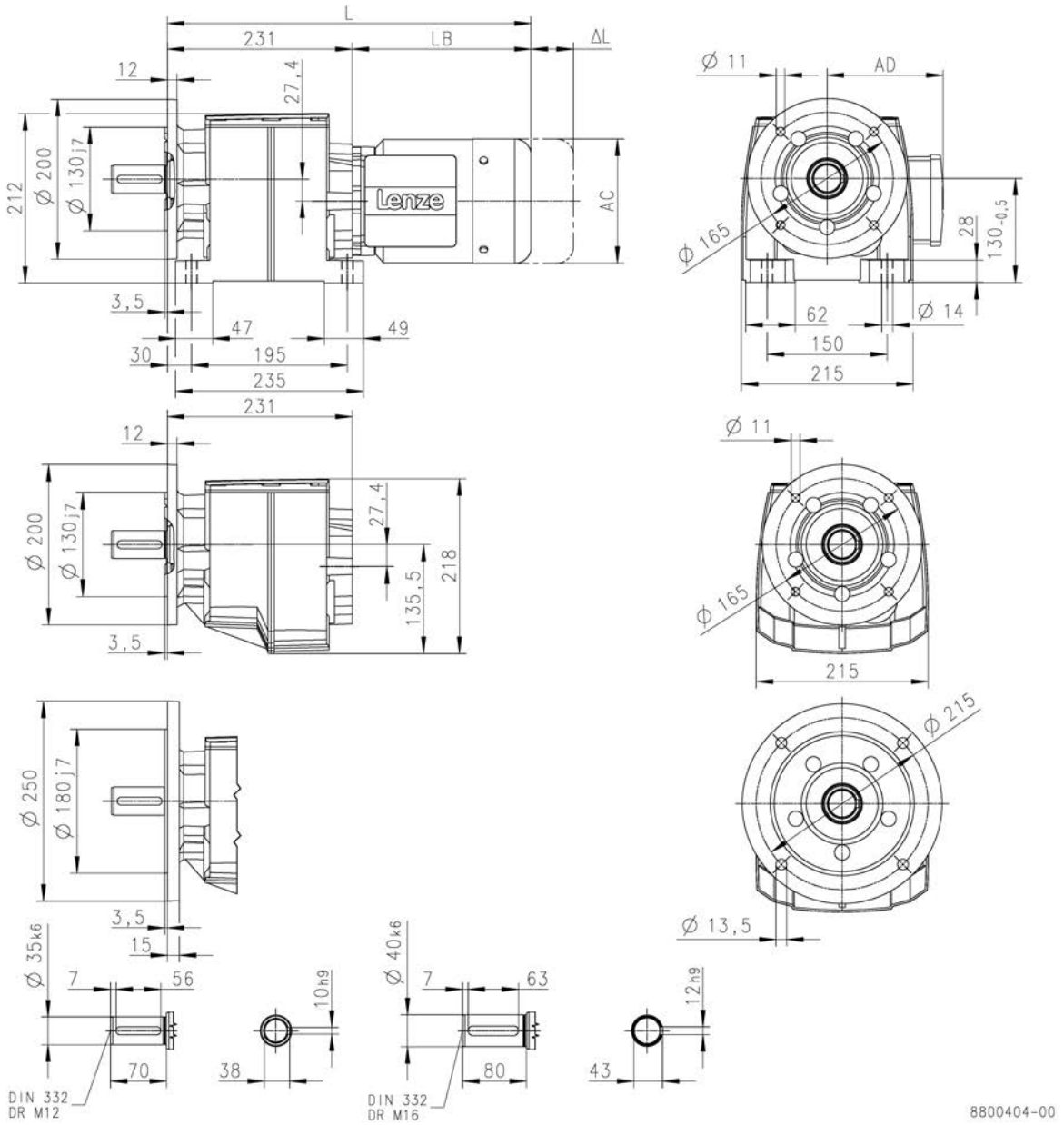

			MD□MA□□				
			063-12	063-32	063-42	071-32	071-42
Total length	L	[mm]	414			434	
Motor length	LB	[mm]	183			203	
Length of motor options	Δ L	[mm]	170			165	
Motor diameter	AC	[mm]	123			139	
Distance motor/connection	AD	[mm]	100			109	

L = length of the motor without built-on accessories
ΔL = additional length of the built-on accessories (longest type)

Dimensions, 4-pole motors

g500-H600

Dimensions with solid shaft and flange
Gearbox design: VAK, VCK

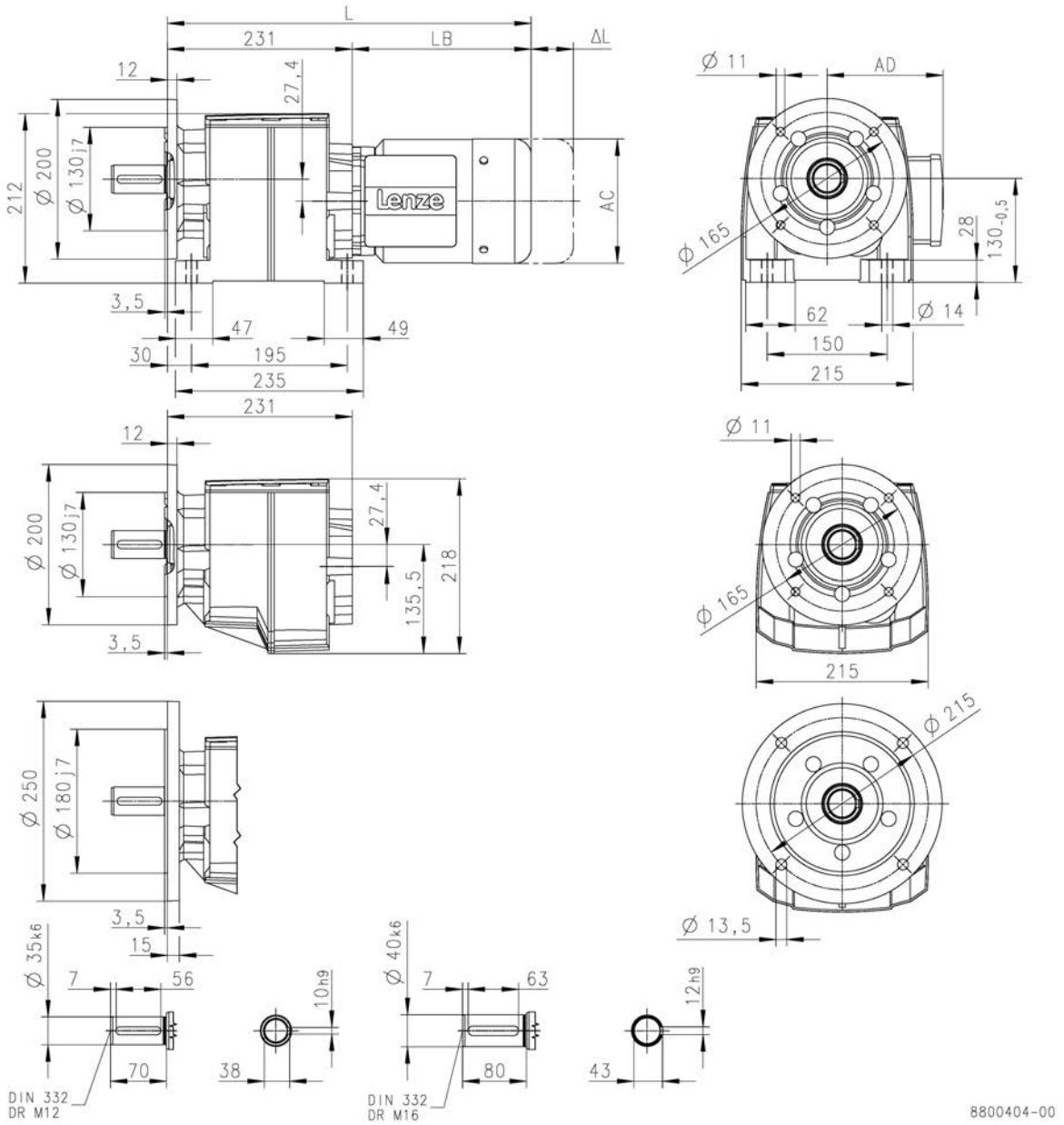

			m550							
			-P80/M4	-P90/M4	-P90/L4	-P100/M4	-P100/L4	-P112/M4	-P132/M4	-P132/L4
Total length	L	[mm]	491	555		615		622	689	
Motor length	LB	[mm]	260	324		384		391	458	
Length of motor options	Δ L	[mm]	183	175		170		183	201	
Motor diameter	AC	[mm]	157	177		195		219	261	
Distance motor/connection	AD	[mm]	148	154		164		171	182	

L = length of the motor without built-on accessories
ΔL = additional length of the built-on accessories (longest type)

Dimensions, 4-pole motors

g500-H850

Dimensions with solid shaft
Gearbox design: VBR

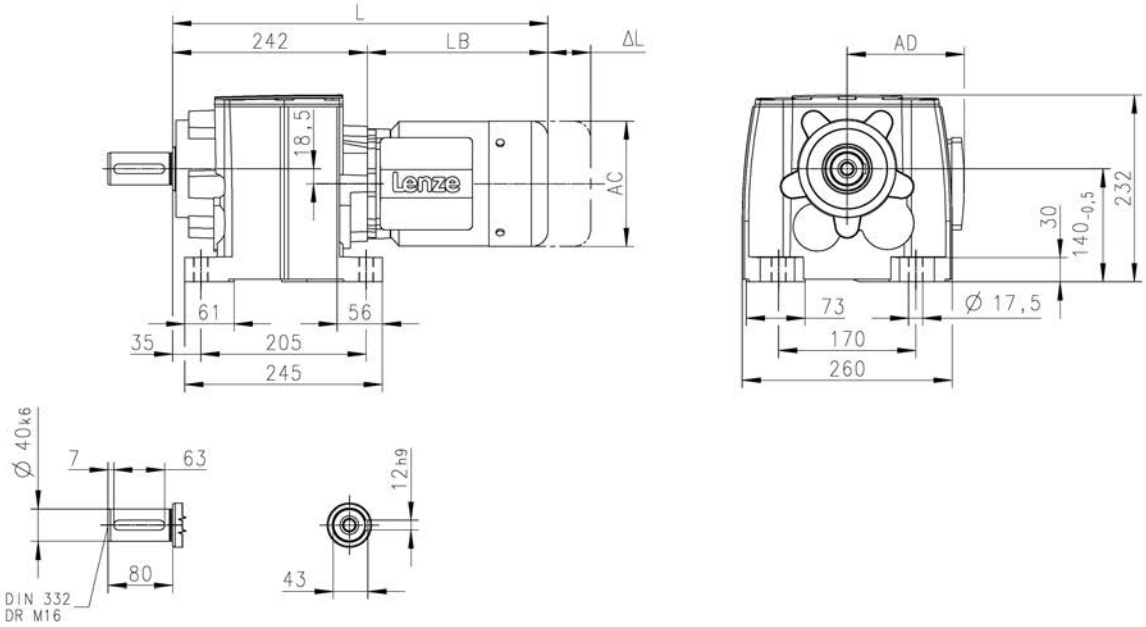

			MD□MA□□		
			063-42	071-32	071-42
Total length	L	[mm]	425	445	
Motor length	LB	[mm]	183	203	
Length of motor options	Δ L	[mm]	170	165	
Motor diameter	AC	[mm]	123	139	
Distance motor/connection	AD	[mm]	100	109	

L = length of the motor without built-on accessories
ΔL = additional length of the built-on accessories (longest type)

Dimensions, 4-pole motors

g500-H850

Dimensions with solid shaft
Gearbox design: VBR

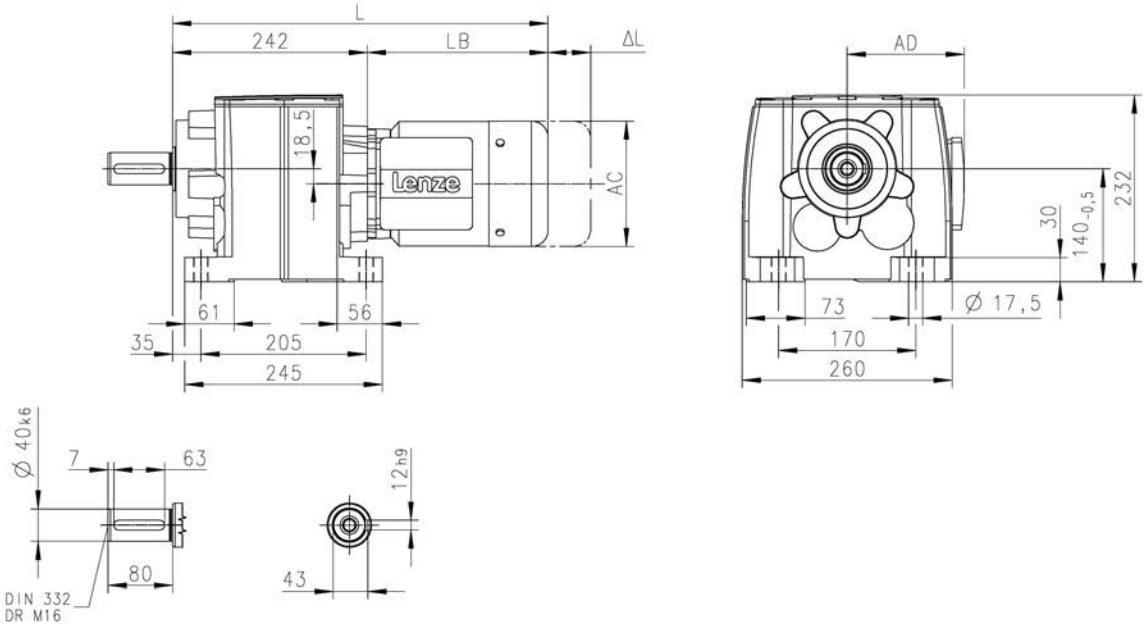

			m550							
			-P80/M4	-P90/M4	-P90/L4	-P100/M4	-P100/L4	-P112/M4	-P132/M4	-P132/L4
Total length	L	[mm]	502	566		626		633	700	
Motor length	LB	[mm]	260	324		384		391	458	
Length of motor options	Δ L	[mm]	183	175		170		183	201	
Motor diameter	AC	[mm]	157	177		195		219	261	
Distance motor/connection	AD	[mm]	148	154		164		171	182	

L = length of the motor without built-on accessories
ΔL = additional length of the built-on accessories (longest type)

Dimensions, 4-pole motors

g500-H850

Dimensions with solid shaft and centering
Gearbox design: VAR, VCR

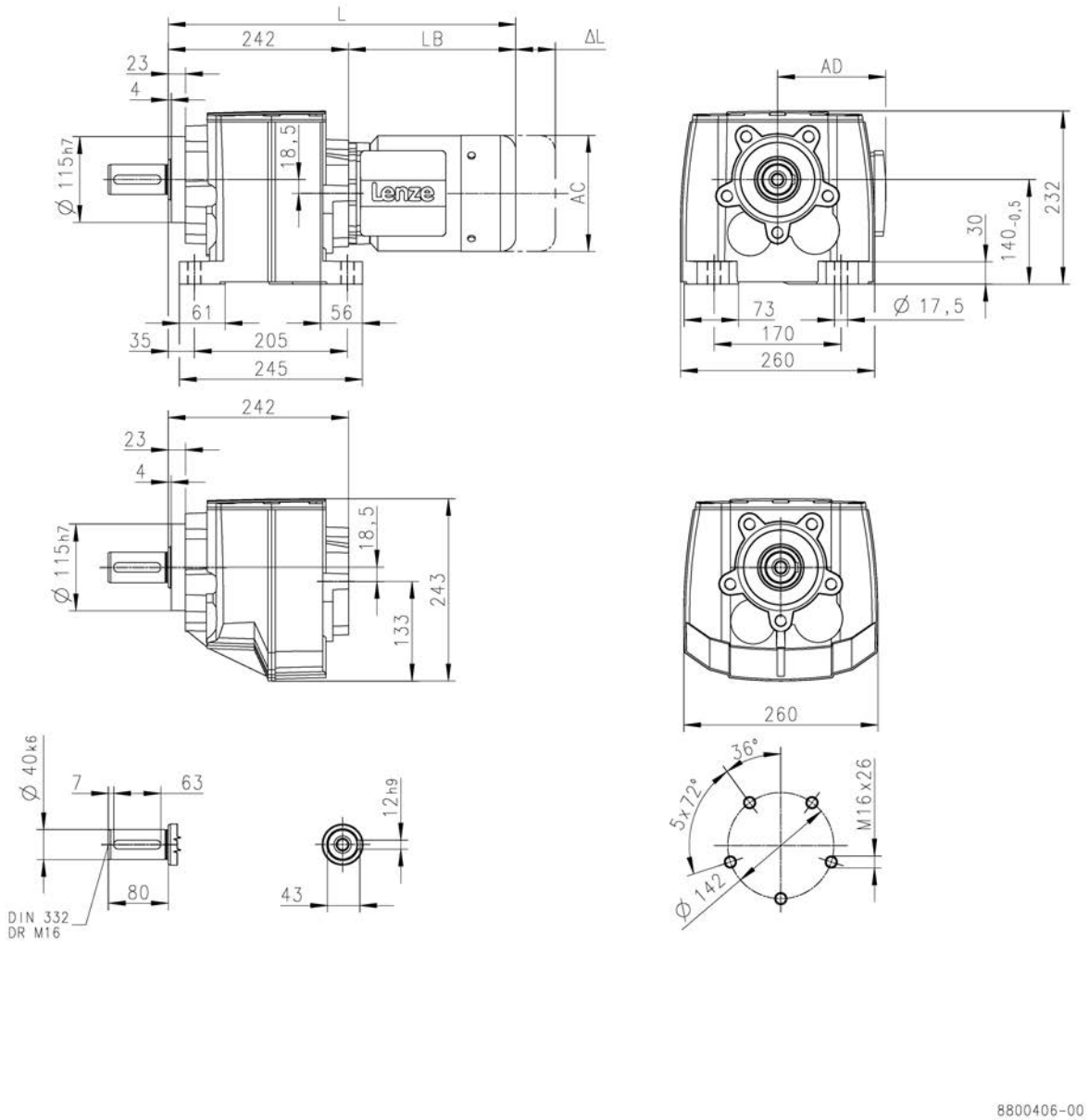

			MD□MA□□		
			063-42	071-32	071-42
Total length	L	[mm]	425	445	
Motor length	LB	[mm]	183	203	
Length of motor options	Δ L	[mm]	170	165	
Motor diameter	AC	[mm]	123	139	
Distance motor/connection	AD	[mm]	100	109	

L = length of the motor without built-on accessories
ΔL = additional length of the built-on accessories (longest type)

Dimensions, 4-pole motors

g500-H850

Dimensions with solid shaft and centering
Gearbox design: VAR, VCR

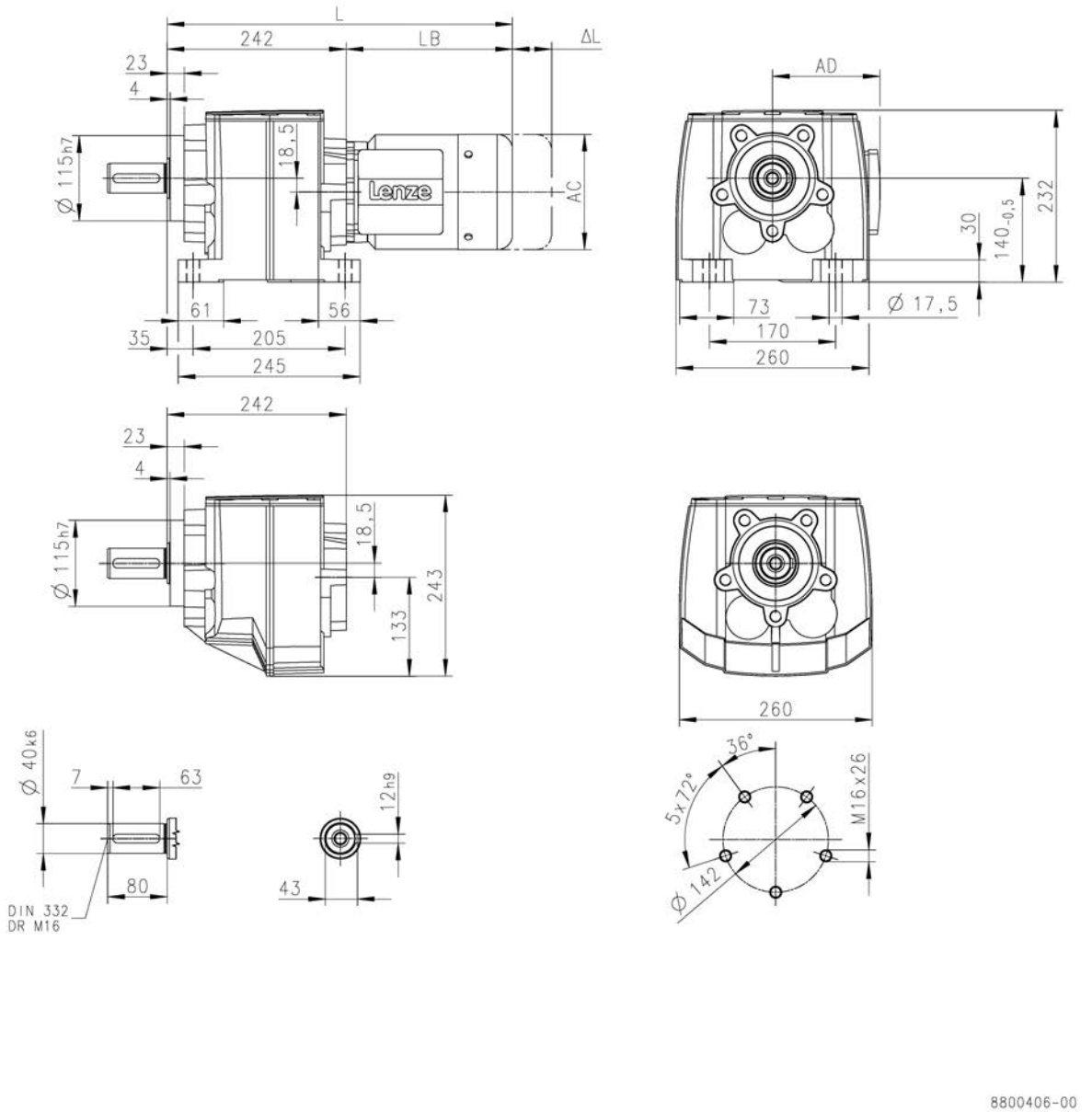

			m550							
			-P80/M4	-P90/M4	-P90/L4	-P100/M4	-P100/L4	-P112/M4	-P132/M4	-P132/L4
Total length	L	[mm]	502	566		626		633	700	
Motor length	LB	[mm]	260	324		384		391	458	
Length of motor options	Δ L	[mm]	183	175		170		183	201	
Motor diameter	AC	[mm]	157	177		195		219	261	
Distance motor/connection	AD	[mm]	148	154		164		171	182	

L = length of the motor without built-on accessories
ΔL = additional length of the built-on accessories (longest type)

Dimensions, 4-pole motors

g500-H850

Dimensions with solid shaft and flange
Gearbox design: VAK, VCK

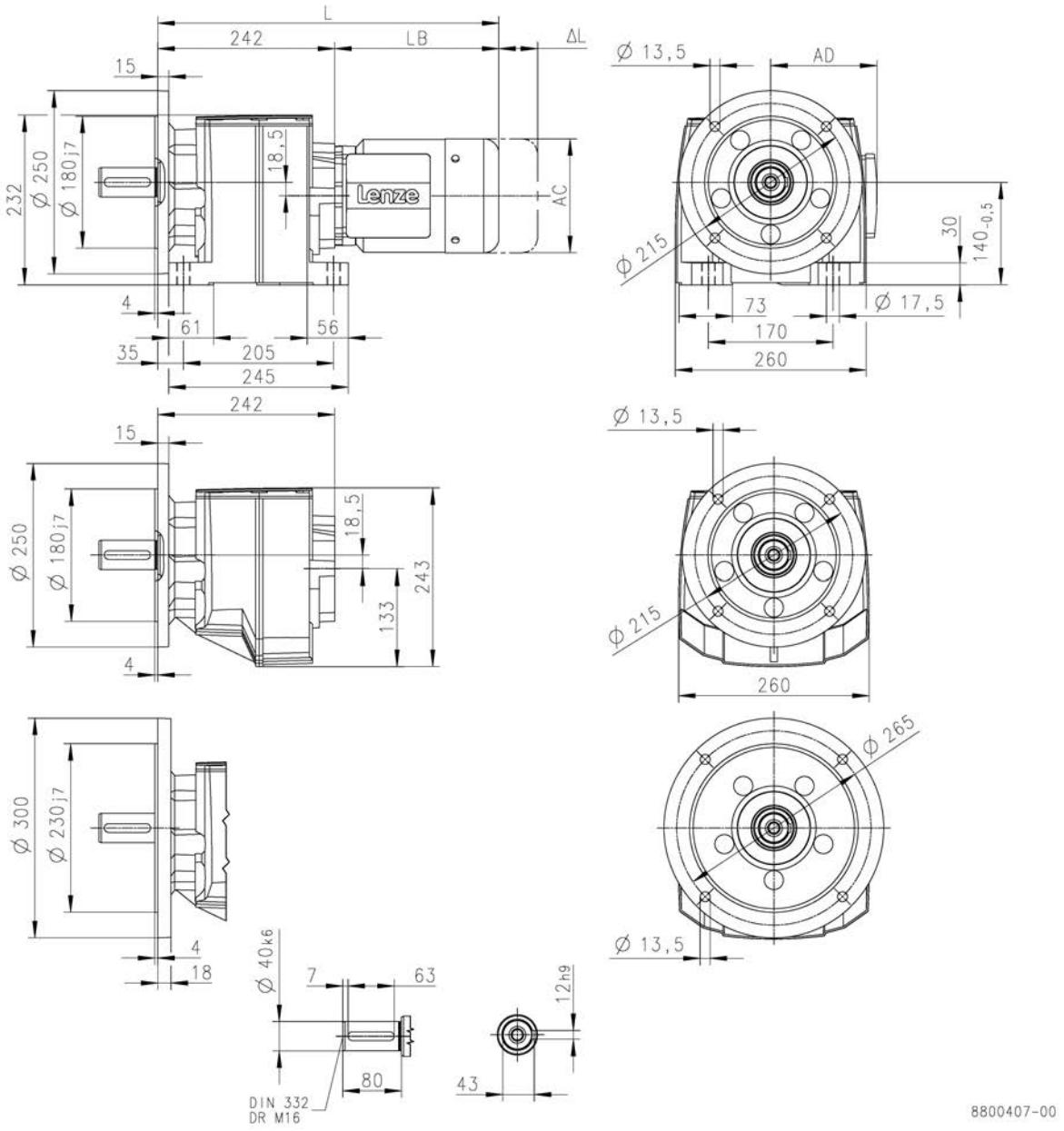

			MD□MA□□		
			063-42	071-32	071-42
Total length	L	[mm]	425	445	
Motor length	LB	[mm]	183	203	
Length of motor options	Δ L	[mm]	170	165	
Motor diameter	AC	[mm]	123	139	
Distance motor/connection	AD	[mm]	100	109	

L = length of the motor without built-on accessories
ΔL = additional length of the built-on accessories (longest type)

Dimensions, 4-pole motors

g500-H850

Dimensions with solid shaft and flange
Gearbox design: VAK, VCK

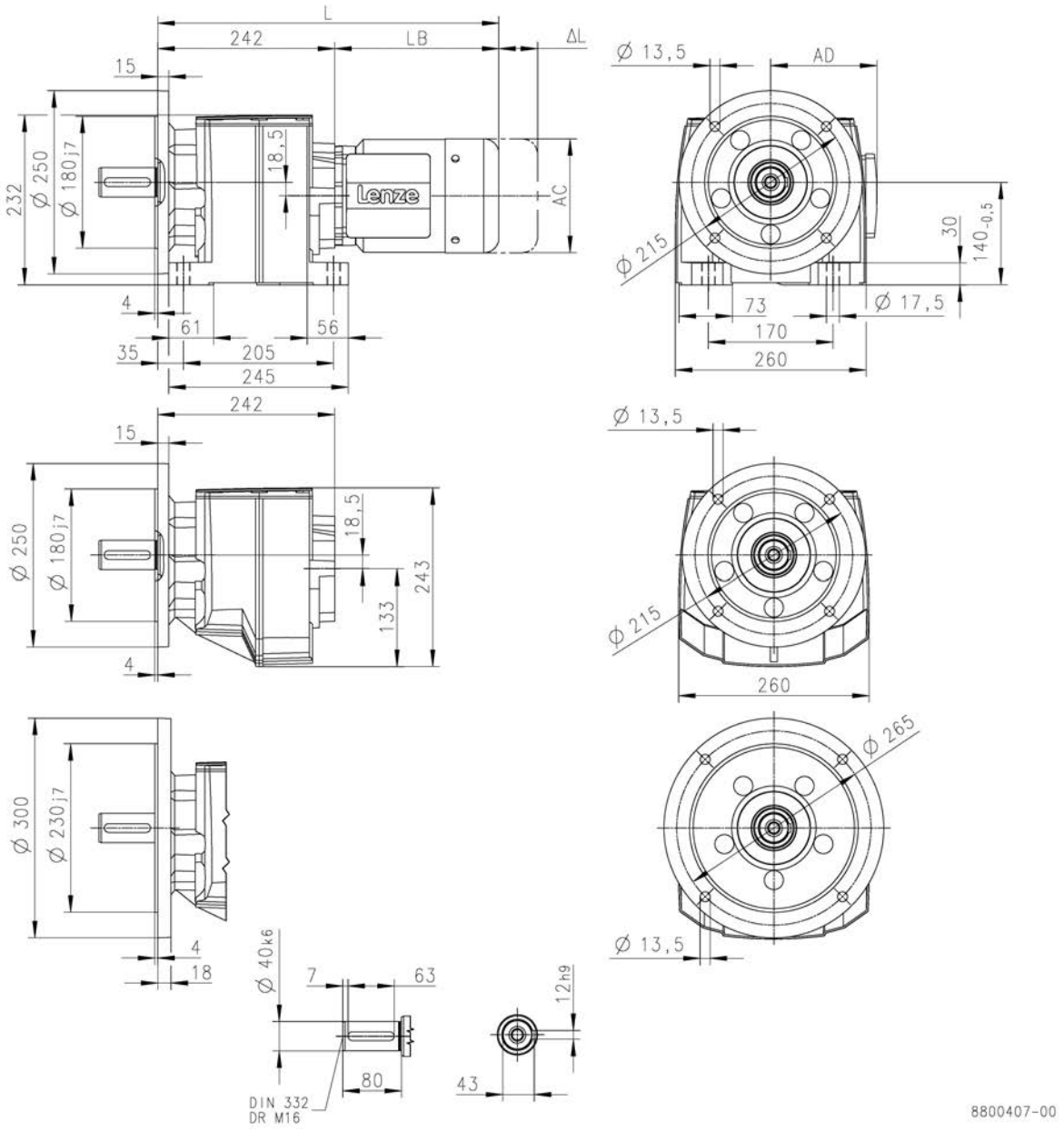

			m550							
			-P80/M4	-P90/M4	-P90/L4	-P100/M4	-P100/L4	-P112/M4	-P132/M4	-P132/L4
Total length	L	[mm]	502	566		626		633	700	
Motor length	LB	[mm]	260	324		384		391	458	
Length of motor options	Δ L	[mm]	183	175		170		183	201	
Motor diameter	AC	[mm]	157	177		195		219	261	
Distance motor/connection	AD	[mm]	148	154		164		171	182	

L = length of the motor without built-on accessories
ΔL = additional length of the built-on accessories (longest type)

Dimensions, 4-pole motors

g500-H1500

Dimensions with solid shaft
Gearbox design: VBR

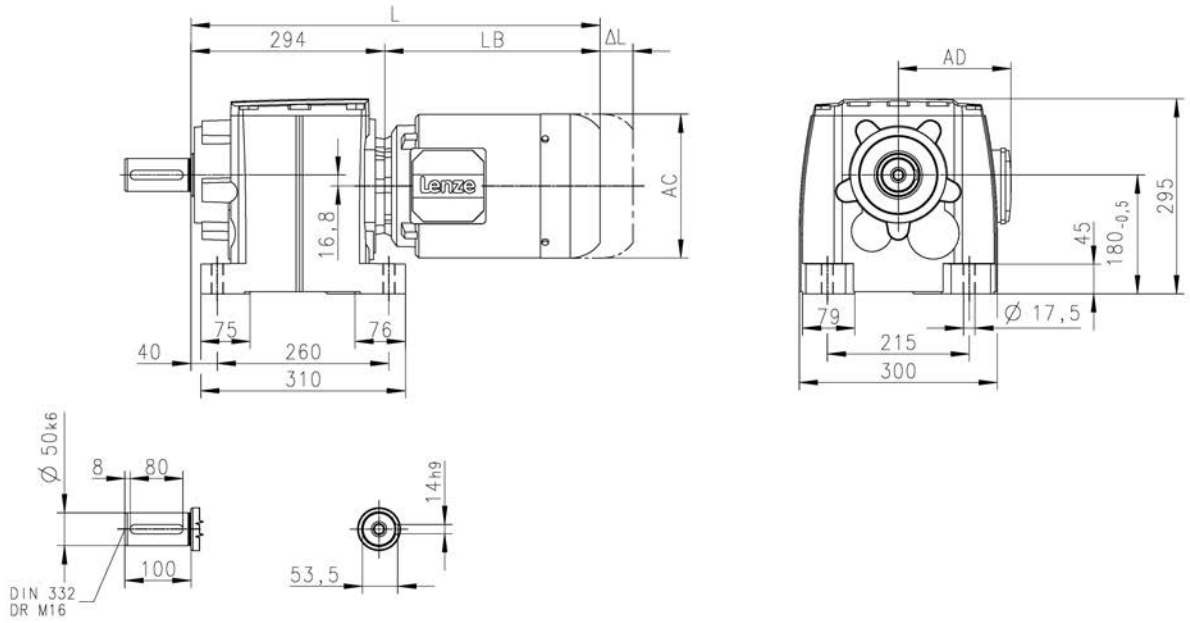

			MD□MA□□	m550				
			071-42	-P80/M4	-P90/M4	-P90/L4	-P100/M4	-P100/L4
Total length	L	[mm]	497	554	618		678	
Motor length	LB	[mm]	203	260	324		384	
Length of motor options	Δ L	[mm]	165	183	175		170	
Motor diameter	AC	[mm]	139	157	177		195	
Distance motor/connection	AD	[mm]	109	148	154		164	

L = length of the motor without built-on accessories
ΔL = additional length of the built-on accessories (longest type)

Dimensions, 4-pole motors

g500-H1500

Dimensions with solid shaft
Gearbox design: VBR

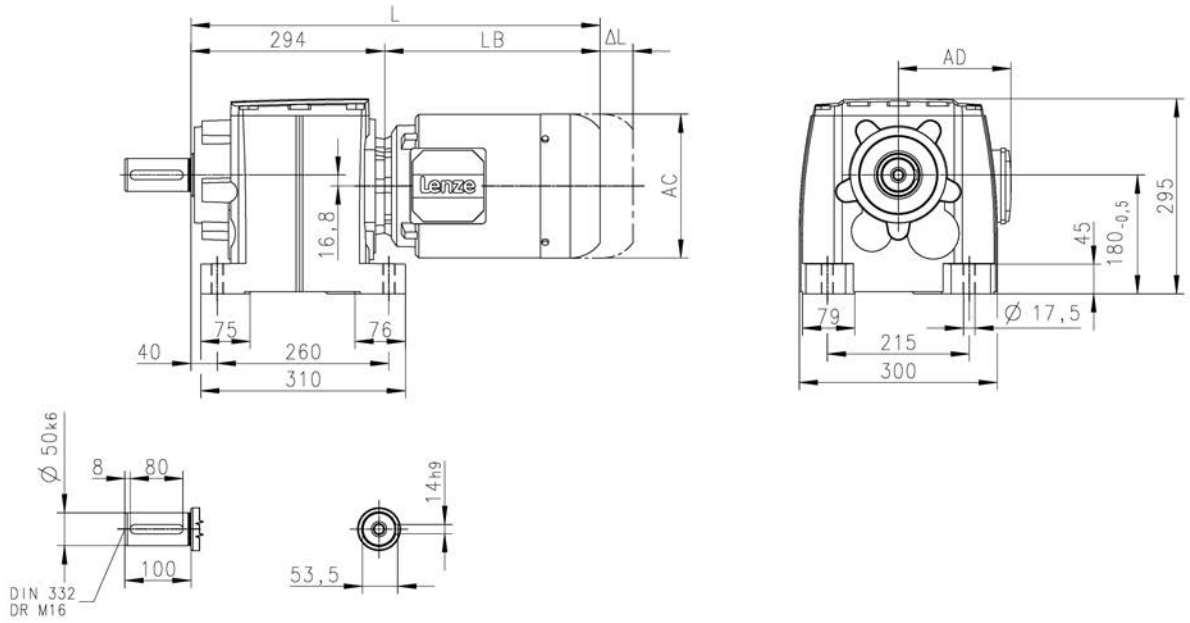

			m550					
			-P112/M4	-P132/M4	-P132/L4	-P160/M4	-P160/L4	-P180/M4
Total length	L	[mm]	685	752		863		939
Motor length	LB	[mm]	391	458		569		645
Length of motor options	Δ L	[mm]	183	201		237		267
Motor diameter	AC	[mm]	219	261		313		351
Distance motor/connection	AD	[mm]	171	182		231		282

L = length of the motor without built-on accessories
ΔL = additional length of the built-on accessories (longest type)

Dimensions, 4-pole motors

g500-H1500

Dimensions with solid shaft and centering
Gearbox design: VAR, VCR

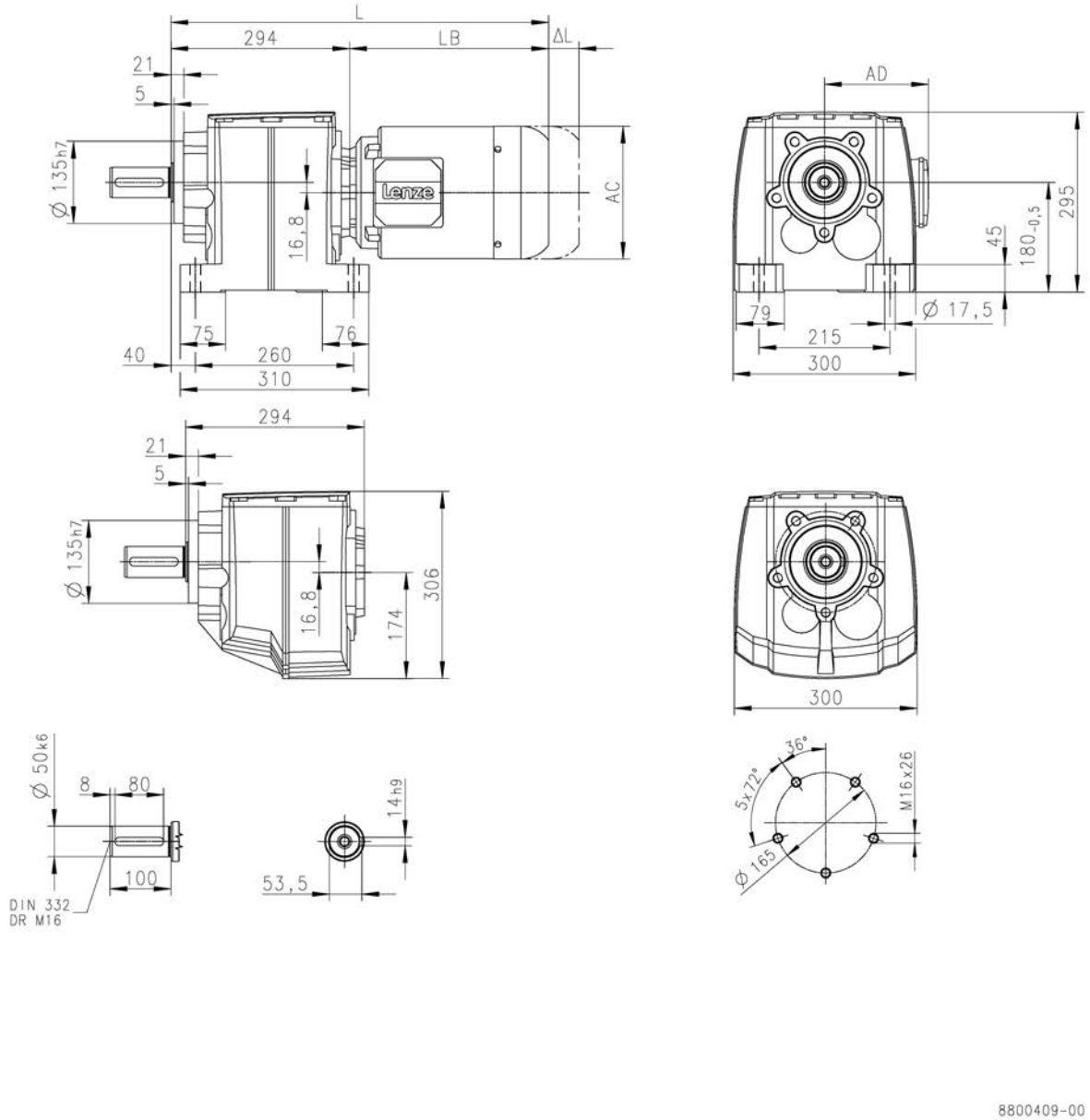

			MD□MA□□	m550				
			071-42	-P80/M4	-P90/M4	-P90/L4	-P100/M4	-P100/L4
Total length	L	[mm]	497	554	618		678	
Motor length	LB	[mm]	203	260	324		384	
Length of motor options	Δ L	[mm]	165	183	175		170	
Motor diameter	AC	[mm]	139	157	177		195	
Distance motor/connection	AD	[mm]	109	148	154		164	

L = length of the motor without built-on accessories
ΔL = additional length of the built-on accessories (longest type)

Dimensions, 4-pole motors

g500-H1500

Dimensions with solid shaft and centering
Gearbox design: VAR, VCR

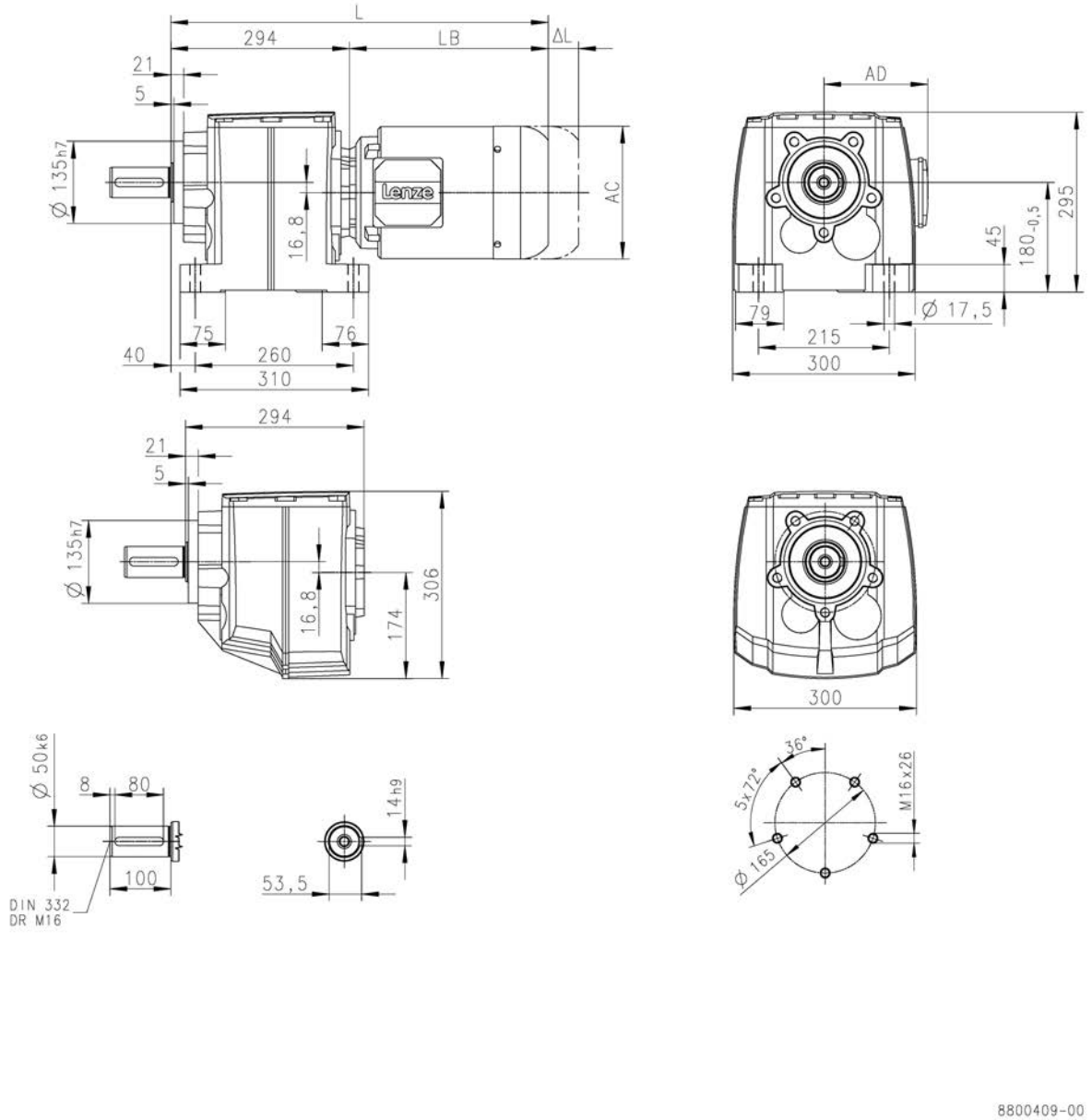

			m550					
			-P112/M4	-P132/M4	-P132/L4	-P160/M4	-P160/L4	-P180/M4
Total length	L	[mm]	685	752		863		939
Motor length	LB	[mm]	391	458		569		645
Length of motor options	Δ L	[mm]	183	201		237		267
Motor diameter	AC	[mm]	219	261		313		351
Distance motor/connection	AD	[mm]	171	182		231		282

L = length of the motor without built-on accessories
ΔL = additional length of the built-on accessories (longest type)

Dimensions, 4-pole motors

g500-H1500

Dimensions with solid shaft and flange
Gearbox design: VAK, VCK

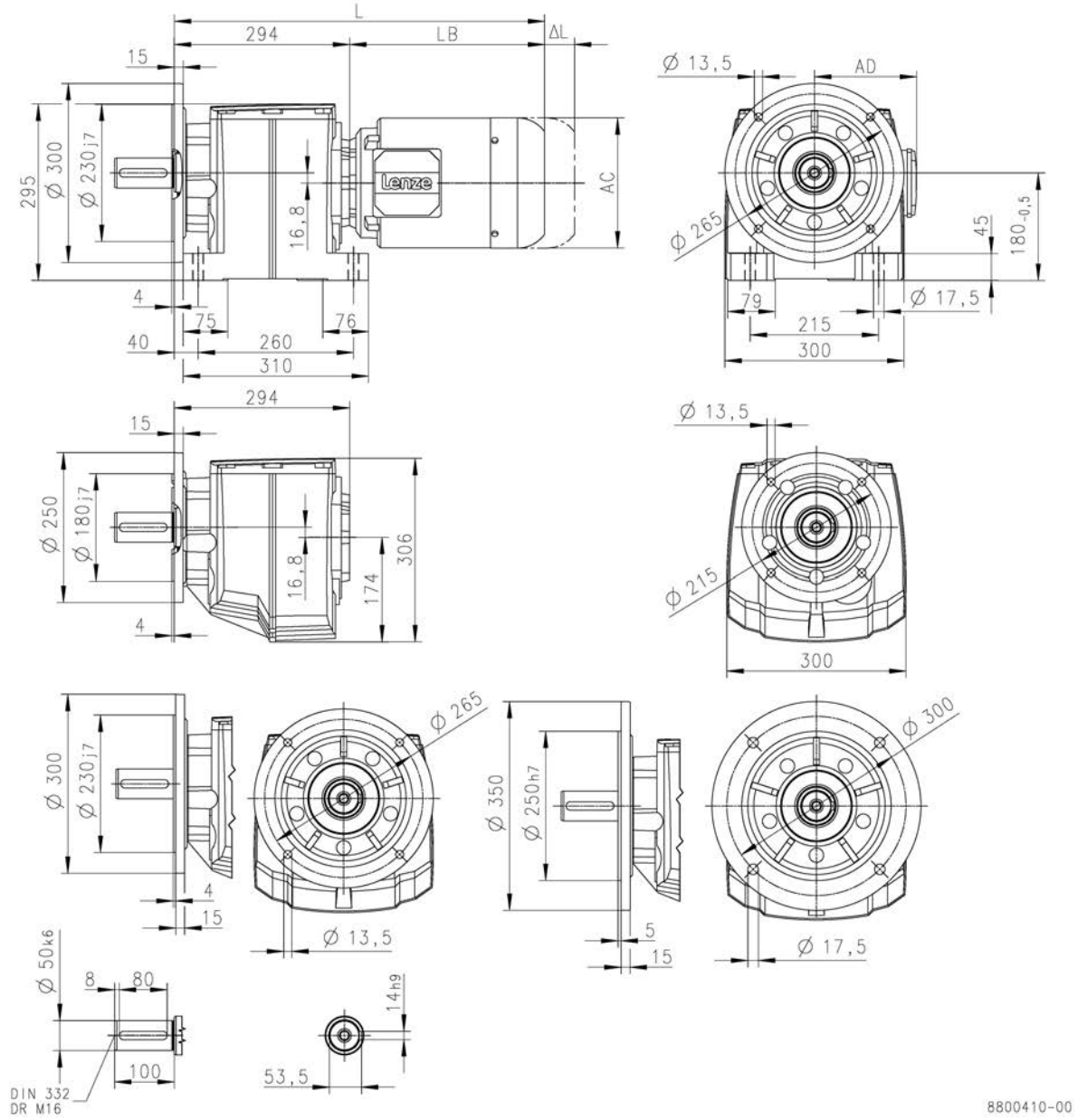

			MD□MA□□	m550				
			071-42	-P80/M4	-P90/M4	-P90/L4	-P100/M4	-P100/L4
Total length	L	[mm]	497	554	618		678	
Motor length	LB	[mm]	203	260	324		384	
Length of motor options	Δ L	[mm]	165	183	175		170	
Motor diameter	AC	[mm]	139	157	177		195	
Distance motor/connection	AD	[mm]	109	148	154		164	

L = length of the motor without built-on accessories
ΔL = additional length of the built-on accessories (longest type)

Dimensions, 4-pole motors

g500-H1500

Dimensions with solid shaft and flange
Gearbox design: VAK, VCK

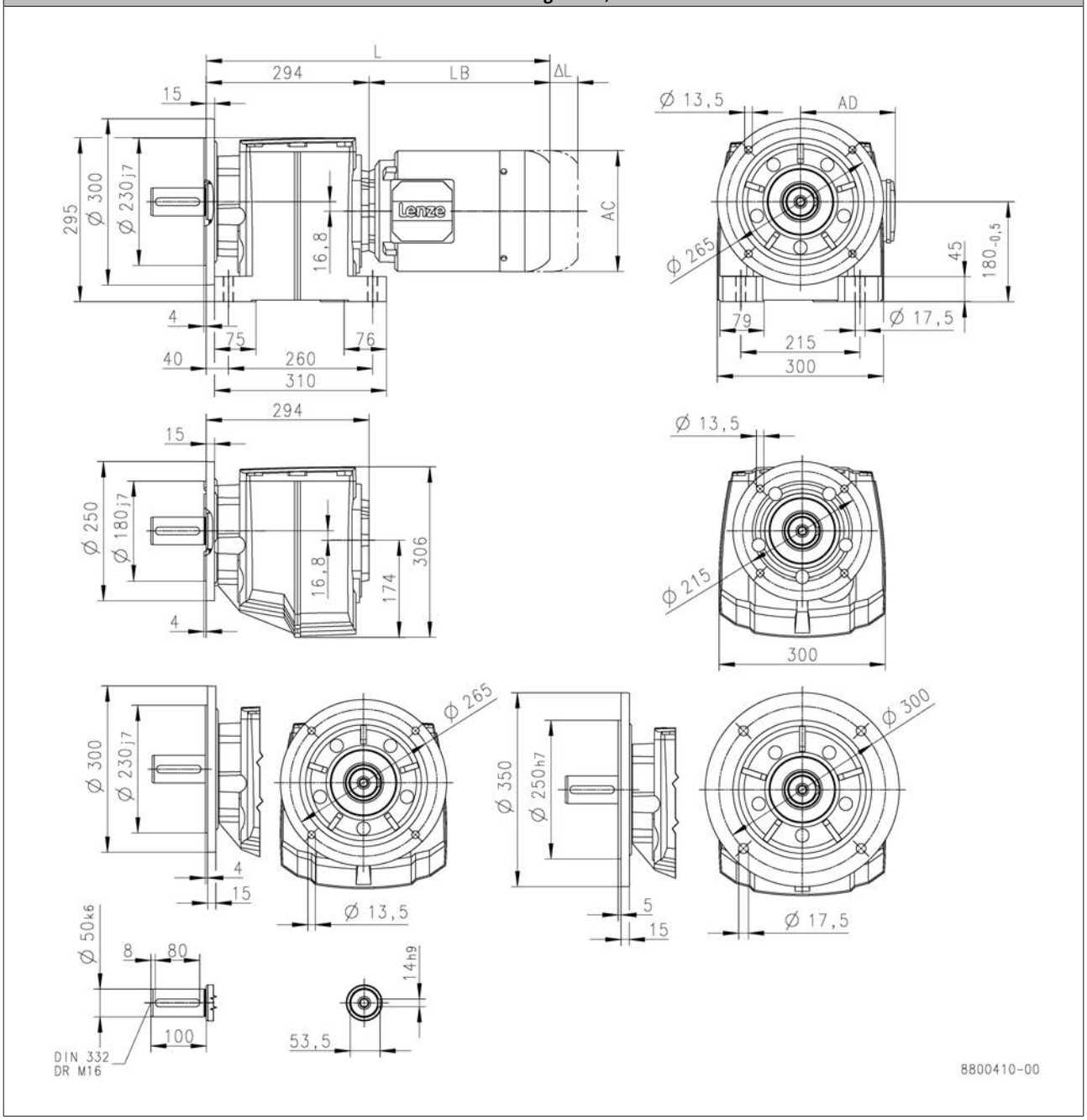

			m550					
			-P112/M4	-P132/M4	-P132/L4	-P160/M4	-P160/L4	-P180/M4
Total length	L	[mm]	685	752		863		939
Motor length	LB	[mm]	391	458		569		645
Length of motor options	Δ L	[mm]	183	201		237		267
Motor diameter	AC	[mm]	219	261		313		351
Distance motor/connection	AD	[mm]	171	182		231		282

L = length of the motor without built-on accessories
ΔL = additional length of the built-on accessories (longest type)

Dimensions, 4-pole motors

g500-H3000

Dimensions with solid shaft
Gearbox design: VBR

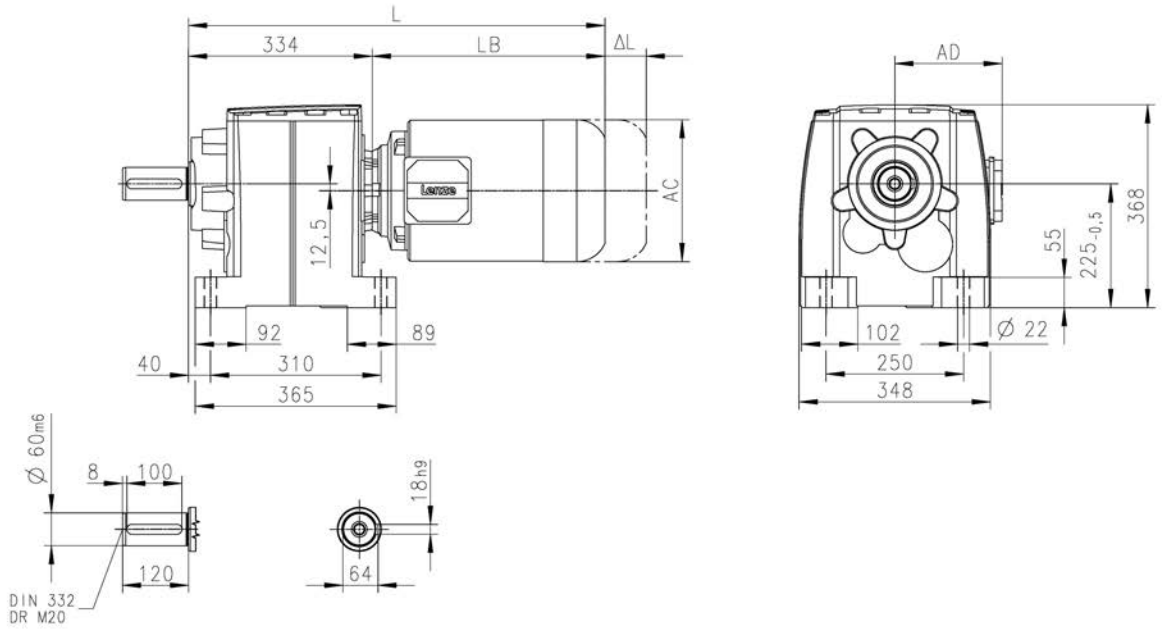

			m550						
			-P90/M4	-P90/L4	-P100/M4	-P100/L4	-P112/M4	-P132/M4	-P132/L4
Total length	L	[mm]	658		718		725	792	
Motor length	LB	[mm]	324		384		391	458	
Length of motor options	Δ L	[mm]	175		170		183	201	
Motor diameter	AC	[mm]	177		195		219	261	
Distance motor/connection	AD	[mm]	154		164		171	182	

L = length of the motor without built-on accessories
ΔL = additional length of the built-on accessories (longest type)

Dimensions, 4-pole motors

g500-H3000

Dimensions with solid shaft
Gearbox design: VBR

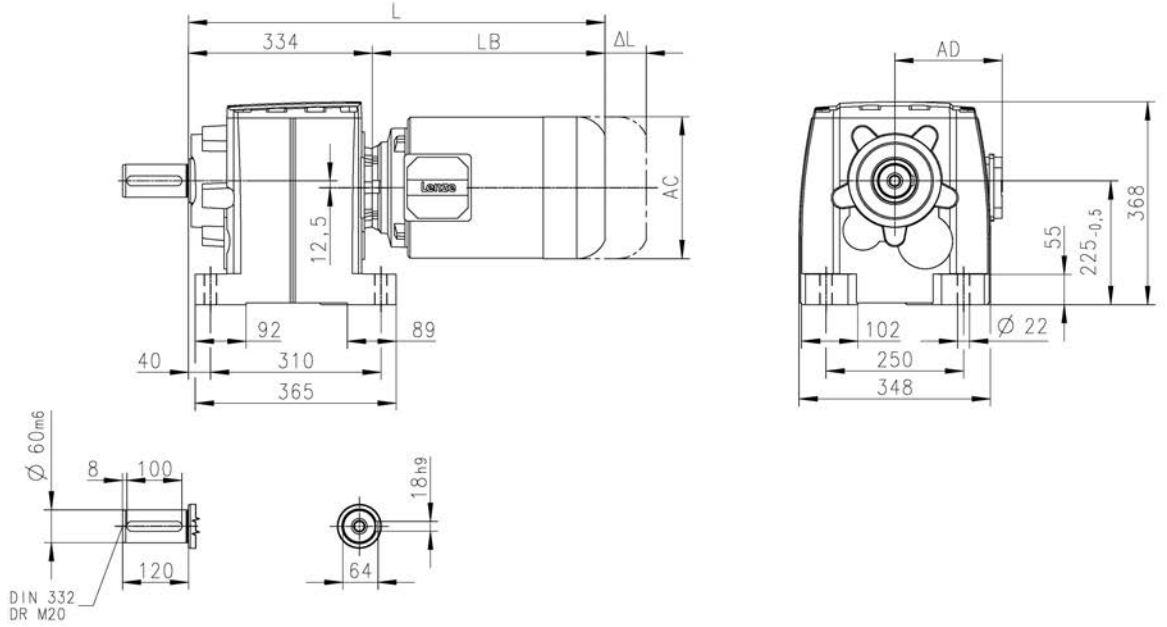

			m550			
			-P160/M4	-P160/L4	-P180/M4	-P180/L4
Total length	L	[mm]	903		979	
Motor length	LB	[mm]	569		645	
Length of motor options	Δ L	[mm]	237		267	
Motor diameter	AC	[mm]	313		351	
Distance motor/connection	AD	[mm]	231		282	

L = length of the motor without built-on accessories
ΔL = additional length of the built-on accessories (longest type)

Dimensions, 4-pole motors

g500-H3000

Dimensions with solid shaft and centering
Gearbox design: VAR, VCR

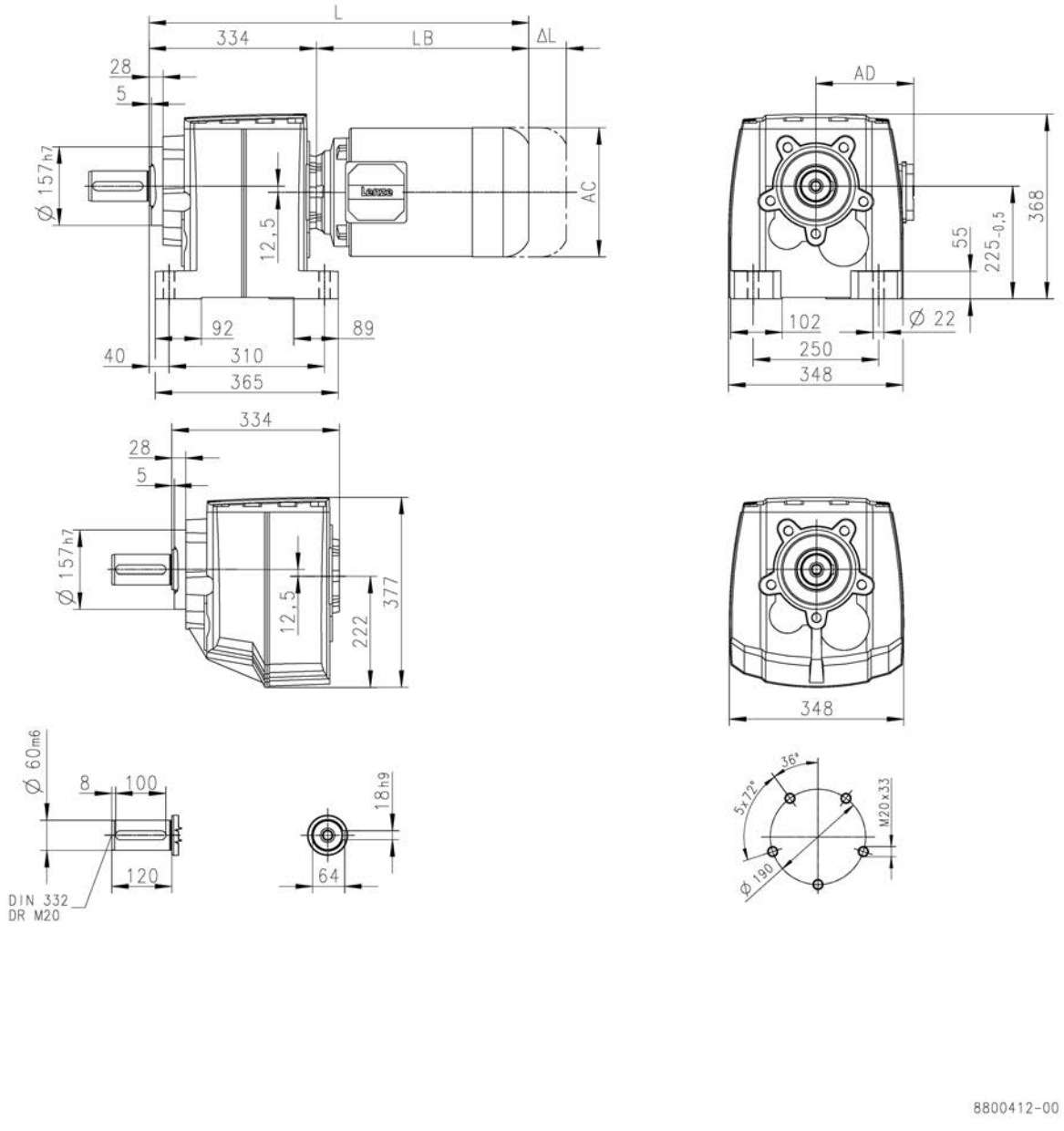

			m550						
			-P90/M4	-P90/L4	-P100/M4	-P100/L4	-P112/M4	-P132/M4	-P132/L4
Total length	L	[mm]	658		718		725	792	
Motor length	LB	[mm]	324		384		391	458	
Length of motor options	Δ L	[mm]	175		170		183	201	
Motor diameter	AC	[mm]	177		195		219	261	
Distance motor/connection	AD	[mm]	154		164		171	182	

L = length of the motor without built-on accessories
ΔL = additional length of the built-on accessories (longest type)

Dimensions, 4-pole motors

g500-H3000

Dimensions with solid shaft and centering
Gearbox design: VAR, VCR

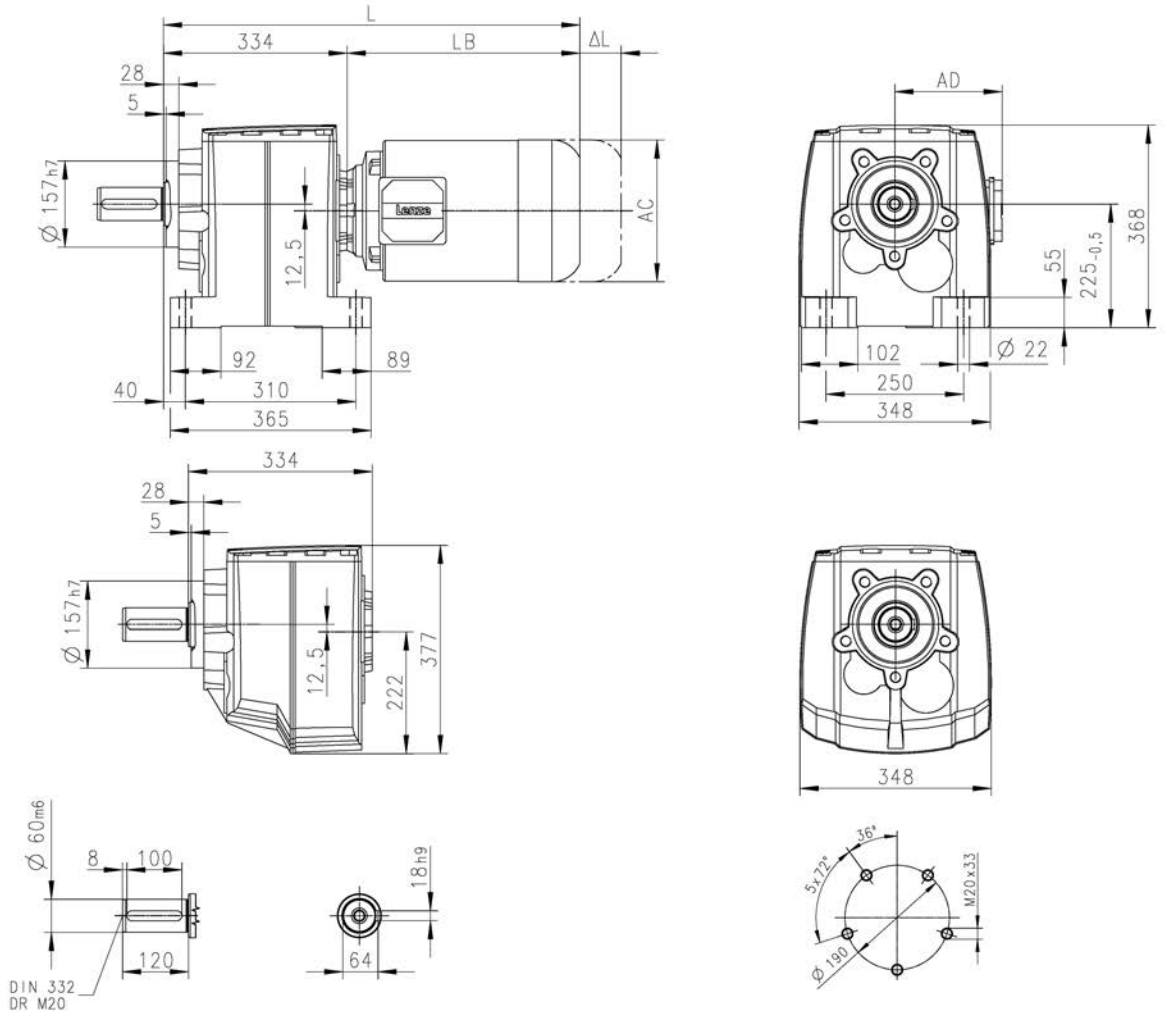

			m550			
			-P160/M4	-P160/L4	-P180/M4	-P180/L4
Total length	L	[mm]	903		979	
Motor length	LB	[mm]	569		645	
Length of motor options	Δ L	[mm]	237		267	
Motor diameter	AC	[mm]	313		351	
Distance motor/connection	AD	[mm]	231		282	

L = length of the motor without built-on accessories
ΔL = additional length of the built-on accessories (longest type)

Dimensions, 4-pole motors

g500-H3000

Dimensions with solid shaft and flange
Gearbox design: VAK, VCK

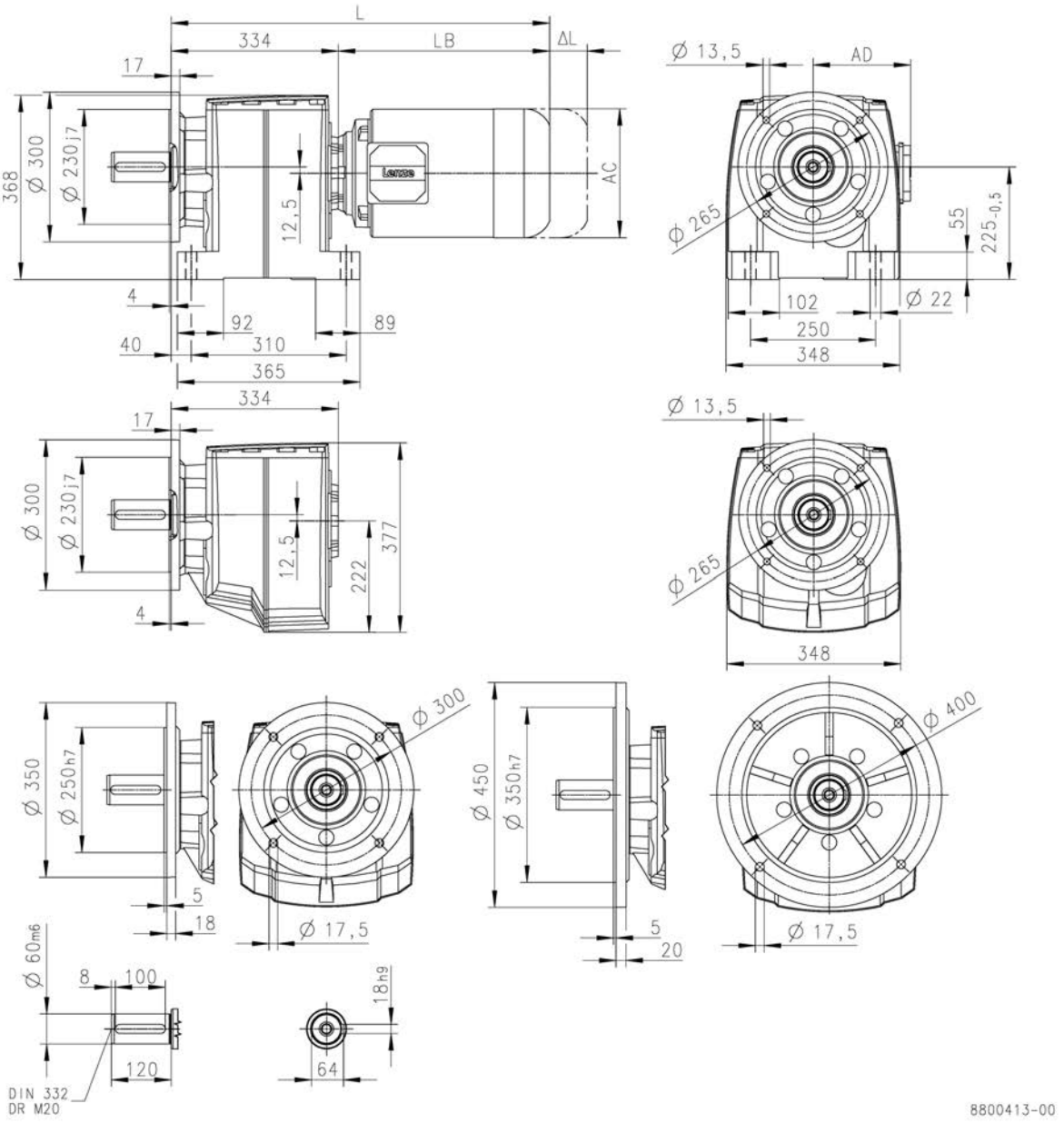

			m550						
			-P90/M4	-P90/L4	-P100/M4	-P100/L4	-P112/M4	-P132/M4	-P132/L4
Total length	L	[mm]	658		718		725	792	
Motor length	LB	[mm]	324		384		391	458	
Length of motor options	Δ L	[mm]	175		170		183	201	
Motor diameter	AC	[mm]	177		195		219	261	
Distance motor/connection	AD	[mm]	154		164		171	182	

L = length of the motor without built-on accessories
ΔL = additional length of the built-on accessories (longest type)

Dimensions, 4-pole motors

g500-H3000

Dimensions with solid shaft and flange
Gearbox design: VAK, VCK

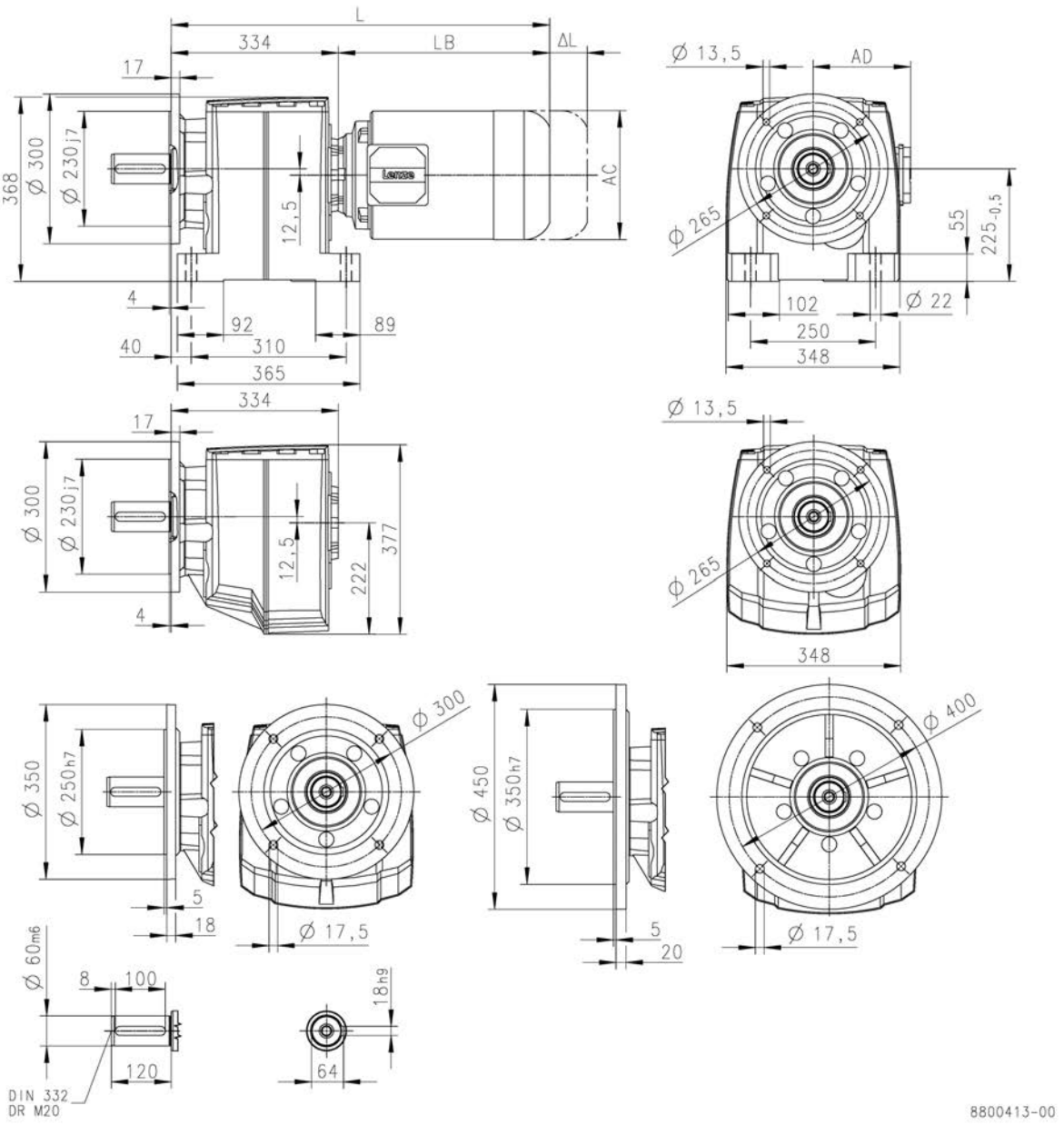

			m550			
			-P160/M4	-P160/L4	-P180/M4	-P180/L4
Total length	L	[mm]	903		979	
Motor length	LB	[mm]	569		645	
Length of motor options	Δ L	[mm]	237		267	
Motor diameter	AC	[mm]	313		351	
Distance motor/connection	AD	[mm]	231		282	

L = length of the motor without built-on accessories
ΔL = additional length of the built-on accessories (longest type)

Dimensions, 4-pole motors

g500-H5000

Dimensions with solid shaft
Gearbox design: VBR

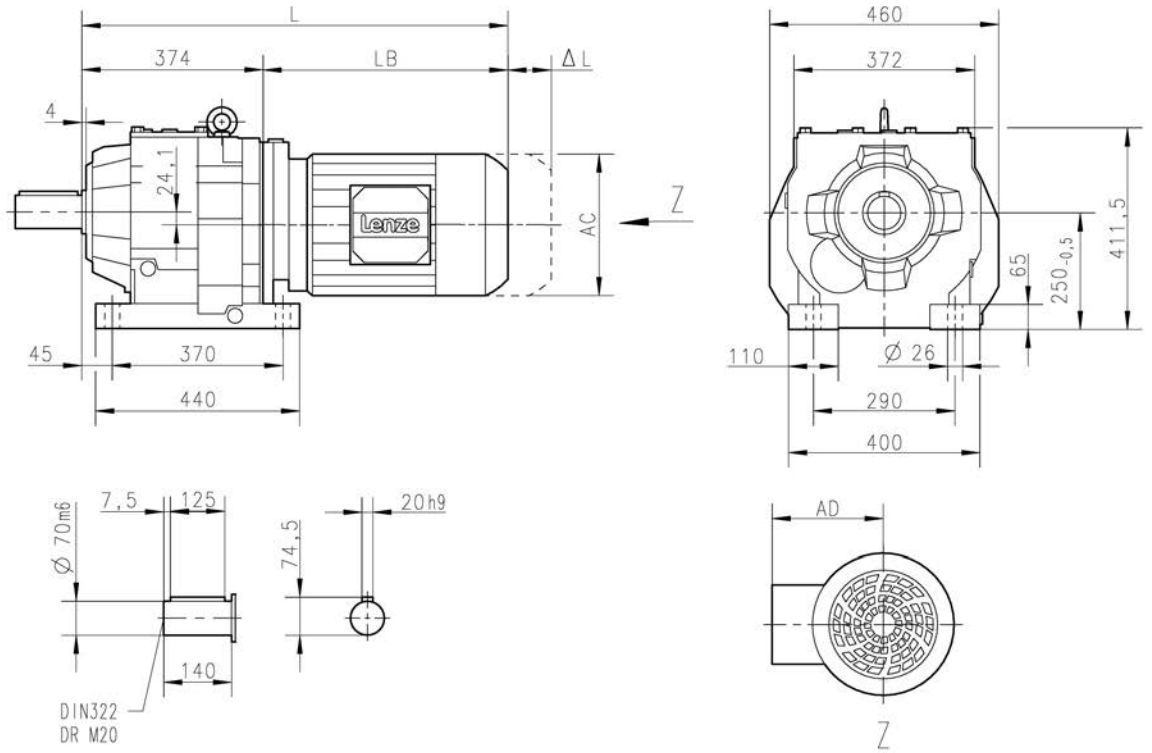

			m540						
			-P90/L4	-P100/M4	-P100/L4	-P112/M4	-P132/M4	-P132/L4	-P160/M4
Total length	L	[mm]	723	767			843		875
Motor length	LB	[mm]	349	393			469		501
Length of motor options	Δ L	[mm]	213	219		206	259		285
Motor diameter	AC	[mm]	174	198		222	264		318
Distance motor/connection	AD	[mm]	154	171		182	207		241

L = length of the motor without built-on accessories
ΔL = additional length of the built-on accessories (longest type)

Dimensions, 4-pole motors

g500-H5000

Dimensions with solid shaft
Gearbox design: VBR

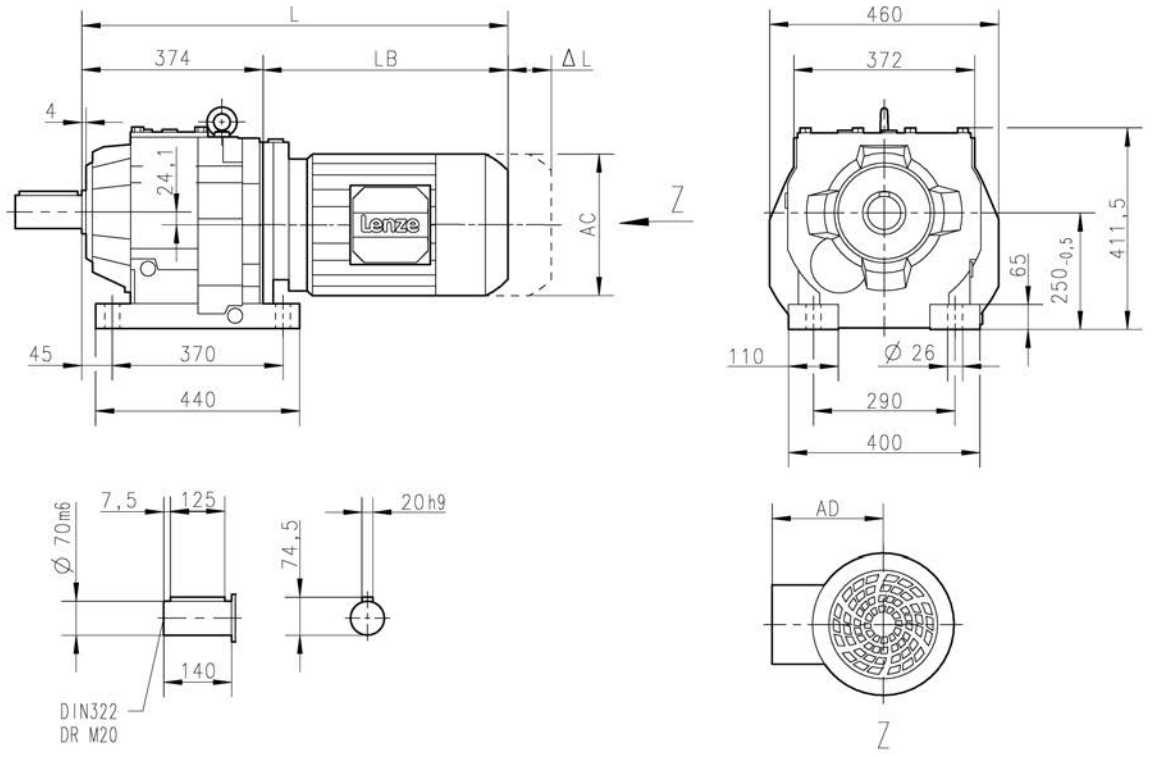

			m540					
			-P160/L4	-P180/M4	-P180/L4	-P200/M4	-P225/M4	-P225/L4
Total length	L	[mm]	935	948	978	1041	1067	1127
Motor length	LB	[mm]	561	574	604	667	693	753
Length of motor options	Δ L	[mm]	285	274		293	787	
Motor diameter	AC	[mm]	318	353		393	439	
Distance motor/connection	AD	[mm]	241	292		315	337	

L = length of the motor without built-on accessories
ΔL = additional length of the built-on accessories (longest type)

Dimensions, 4-pole motors

g500-H5000

Dimensions with solid shaft and centering
Gearbox design: VCR

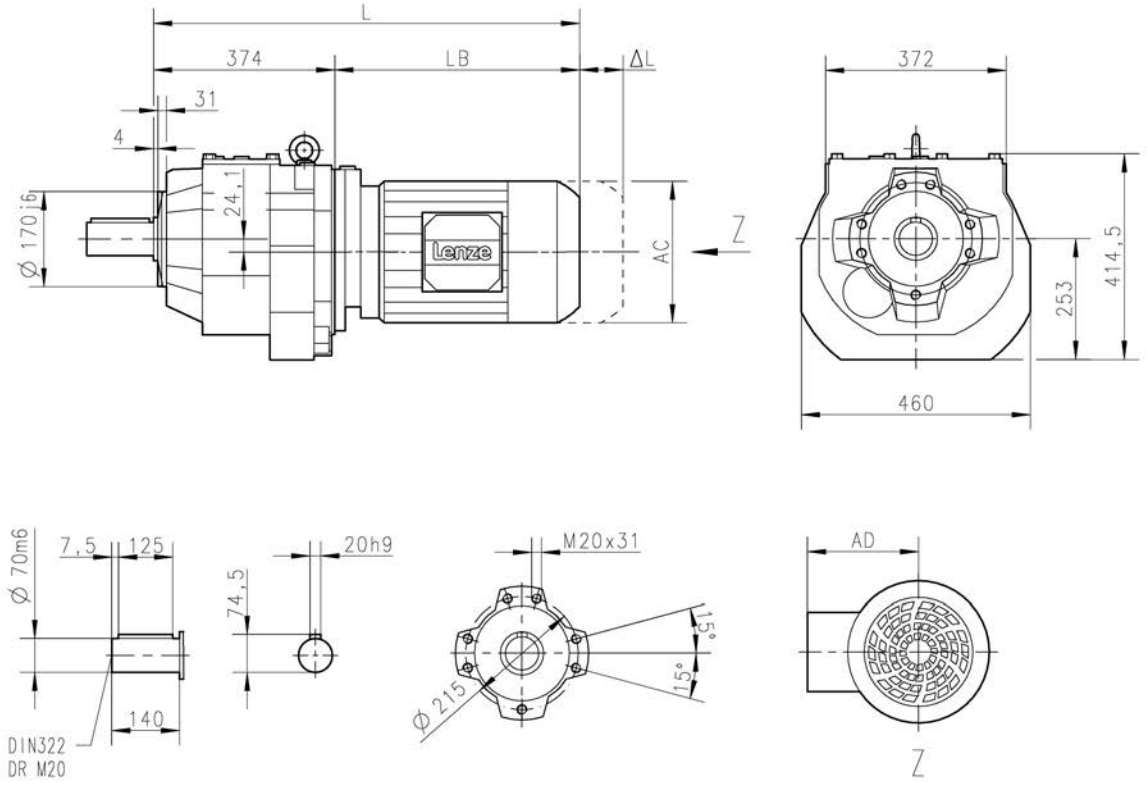

			m540						
			-P90/L4	-P100/M4	-P100/L4	-P112/M4	-P132/M4	-P132/L4	-P160/M4
Total length	L	[mm]	723	767			843		875
Motor length	LB	[mm]	349	393			469		501
Length of motor options	Δ L	[mm]	213	219		206	259		285
Motor diameter	AC	[mm]	174	198		222	264		318
Distance motor/connection	AD	[mm]	154	171		182	207		241

L = length of the motor without built-on accessories
ΔL = additional length of the built-on accessories (longest type)

Dimensions, 4-pole motors

g500-H5000

Dimensions with solid shaft and centering
Gearbox design: VCR

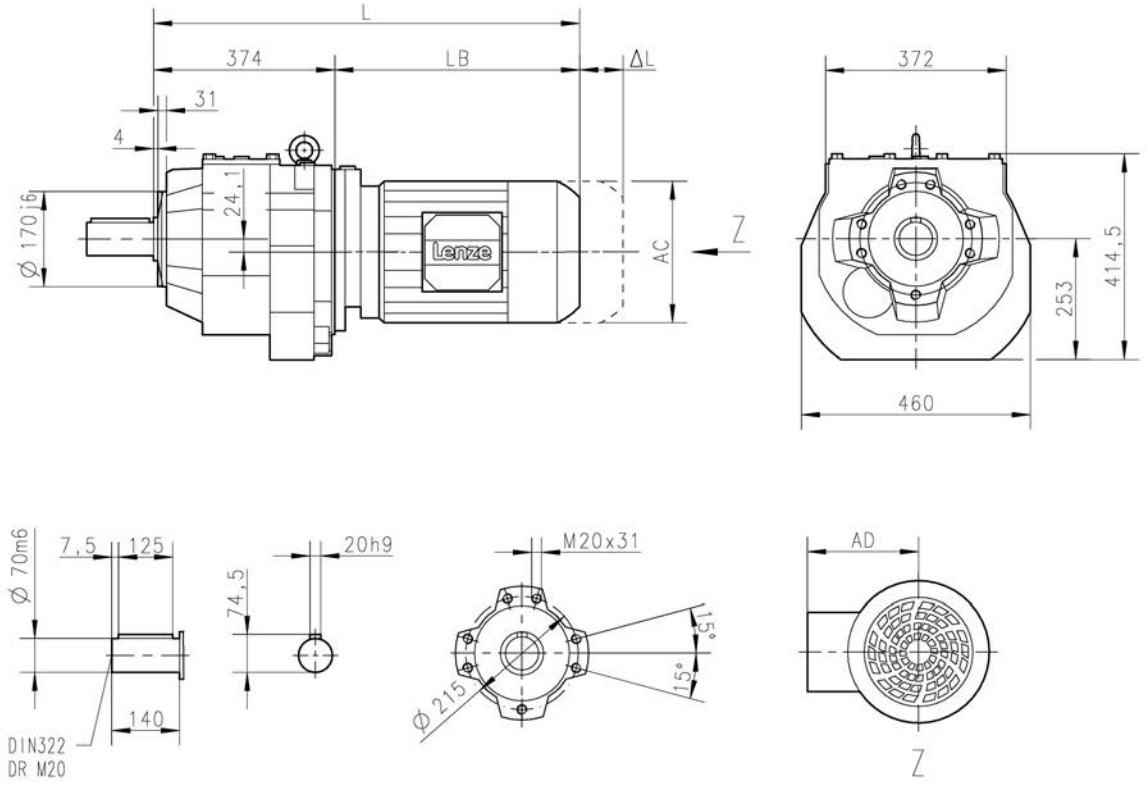

			m540					
			-P160/L4	-P180/M4	-P180/L4	-P200/M4	-P225/M4	-P225/L4
Total length	L	[mm]	935	948	978	1041	1067	1127
Motor length	LB	[mm]	561	574	604	667	693	753
Length of motor options	Δ L	[mm]	285	274		293	787	
Motor diameter	AC	[mm]	318	353		393	439	
Distance motor/connection	AD	[mm]	241	292		315	337	

L = length of the motor without built-on accessories
ΔL = additional length of the built-on accessories (longest type)

Dimensions, 4-pole motors

g500-H5000

Dimensions with solid shaft and flange
Gearbox design: VCK

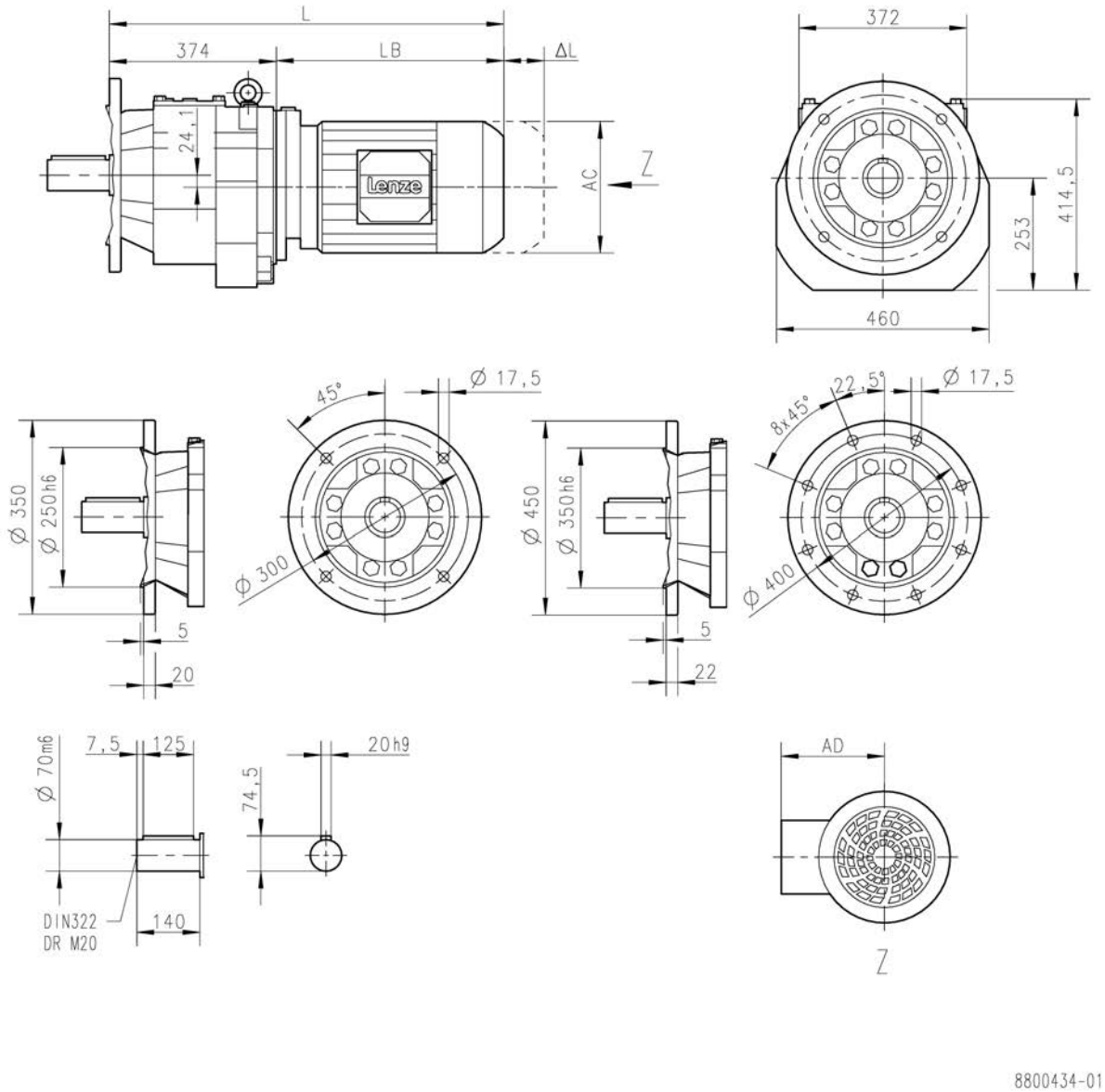

			m540						
			-P90/L4	-P100/M4	-P100/L4	-P112/M4	-P132/M4	-P132/L4	-P160/M4
Total length	L	[mm]	723	767			843		875
Motor length	LB	[mm]	349	393			469		501
Length of motor options	Δ L	[mm]	213	219		206	259		285
Motor diameter	AC	[mm]	174	198		222	264		318
Distance motor/connection	AD	[mm]	154	171		182	207		241

L = length of the motor without built-on accessories
ΔL = additional length of the built-on accessories (longest type)

Dimensions, 4-pole motors

g500-H5000

Dimensions with solid shaft and flange
Gearbox design: VCK

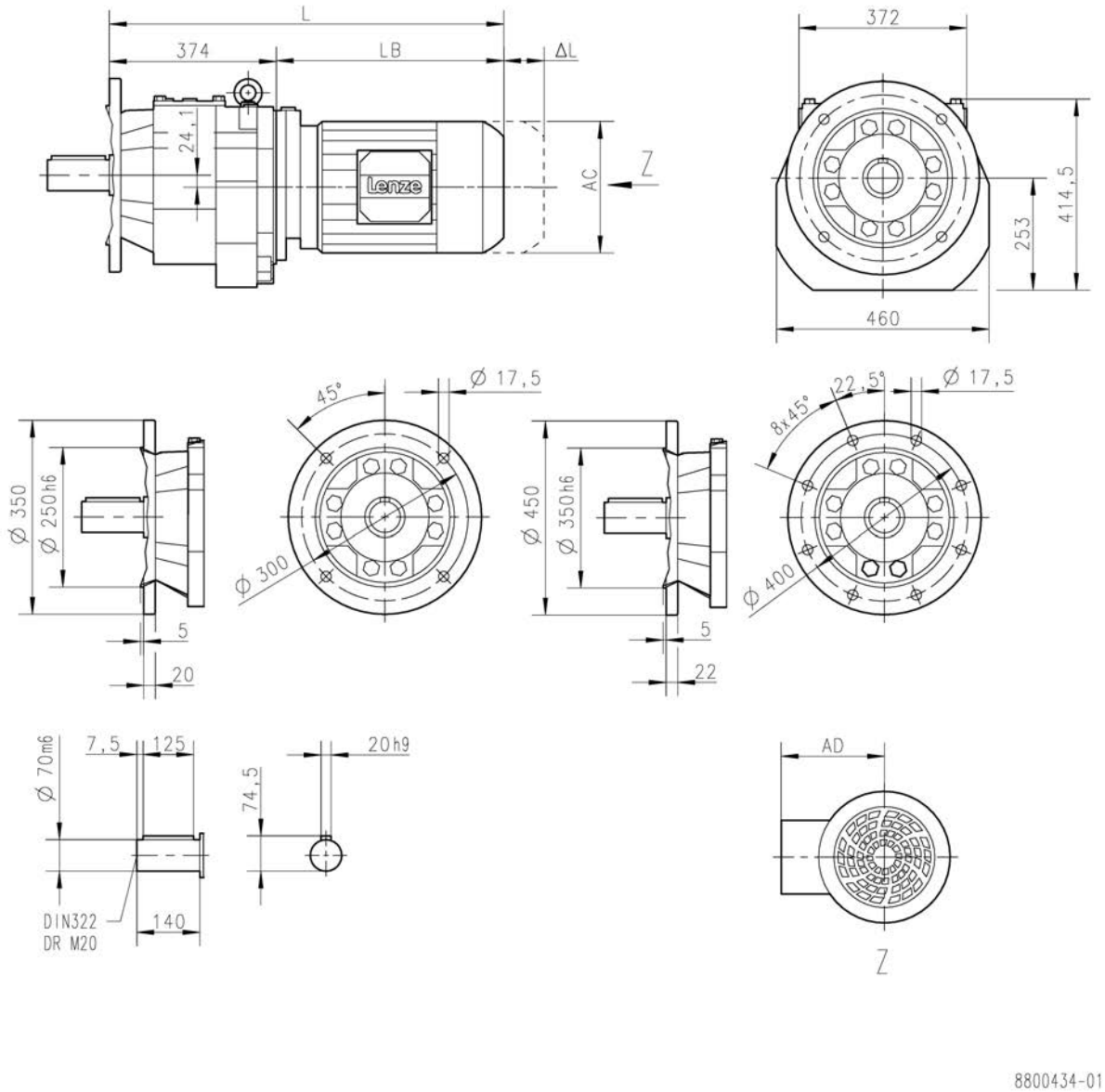

			m540					
			-P160/L4	-P180/M4	-P180/L4	-P200/M4	-P225/M4	-P225/L4
Total length	L	[mm]	935	948	978	1041	1067	1127
Motor length	LB	[mm]	561	574	604	667	693	753
Length of motor options	Δ L	[mm]	285	274		293	787	
Motor diameter	AC	[mm]	318	353		393	439	
Distance motor/connection	AD	[mm]	241	292		315	337	

L = length of the motor without built-on accessories
ΔL = additional length of the built-on accessories (longest type)

Dimensions, 4-pole motors

g500-H8000

Dimensions with solid shaft
Gearbox design: VBR

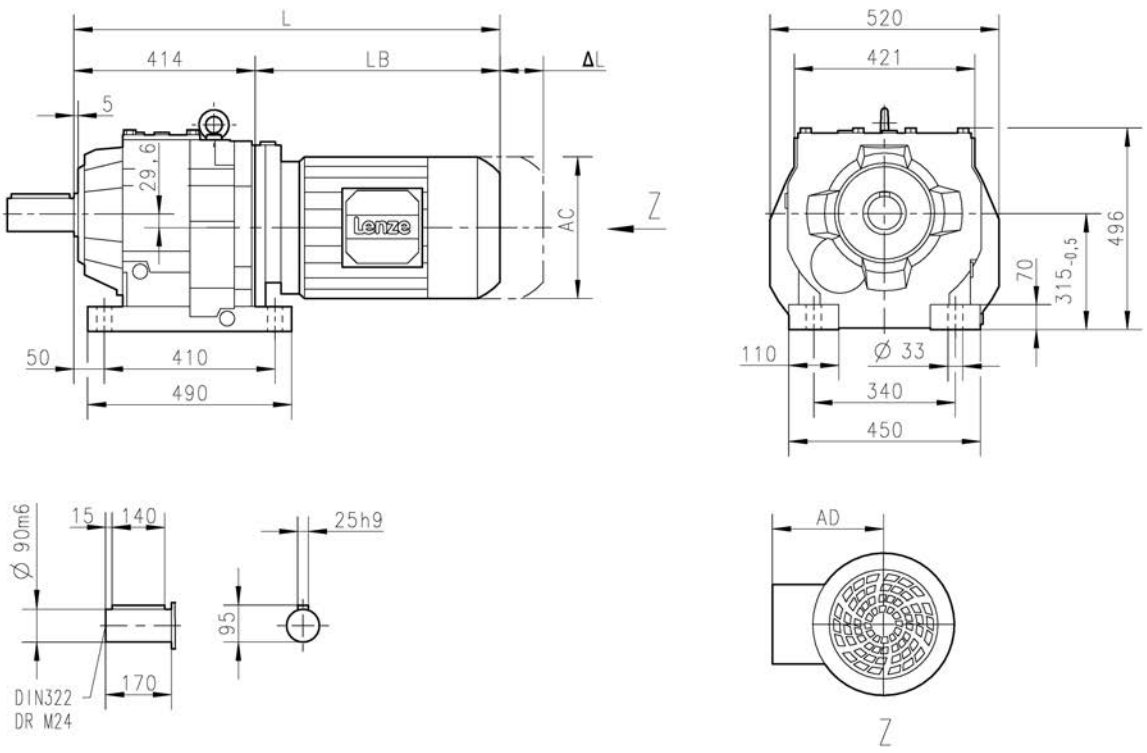

			m540							
			-P100/M4	-P100/L4	-P112/M4	-P132/M4	-P132/L4	-P160/M4	-P160/L4	-P180/M4
Total length	L	[mm]	805			876		908	968	981
Motor length	LB	[mm]	391			462		494	554	567
Length of motor options	Δ L	[mm]	219		206	259		285		274
Motor diameter	AC	[mm]	198		222	264		318		353
Distance motor/connection	AD	[mm]	171		182	207		241		292

L = length of the motor without built-on accessories
ΔL = additional length of the built-on accessories (longest type)

Dimensions, 4-pole motors

g500-H8000

Dimensions with solid shaft
Gearbox design: VBR

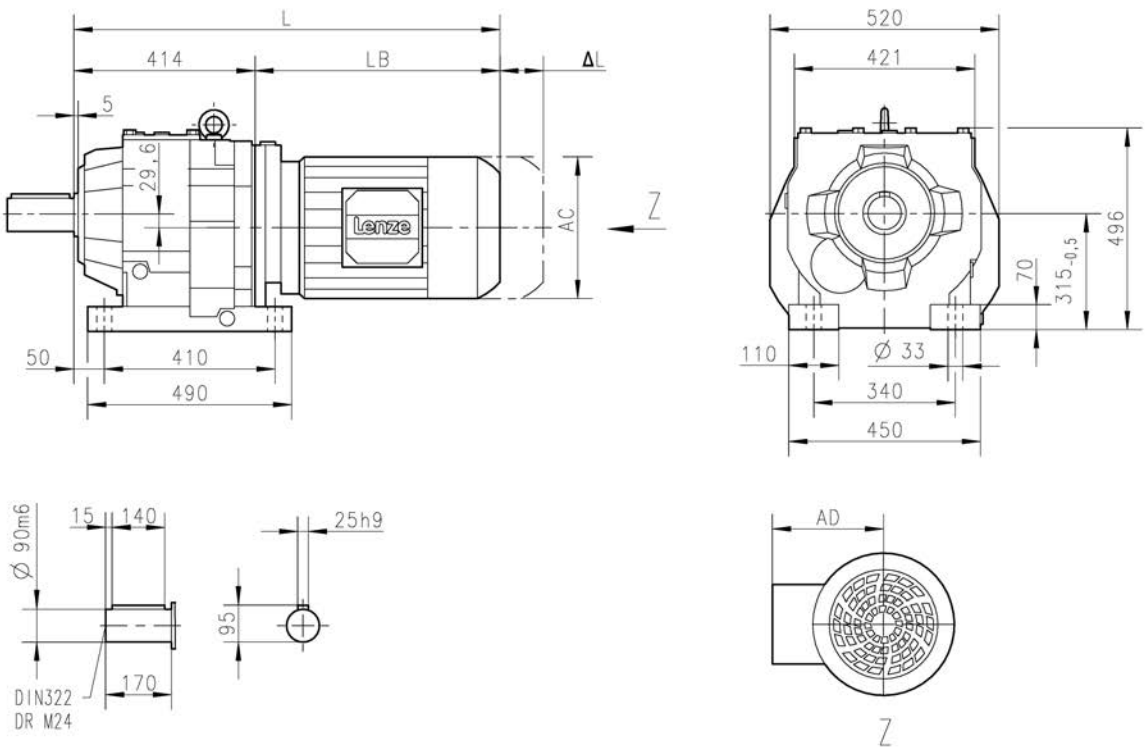

			m540				
			-P180/L4	-P200/M4	-P225/M4	-P225/L4	-P250/M4
Total length	L	[mm]	1011	1074	1095	1155	1206
Motor length	LB	[mm]	597	660	681	741	792
Length of motor options	Δ L	[mm]	274	293	787		827
Motor diameter	AC	[mm]	353	393	439		487
Distance motor/connection	AD	[mm]	292	315	337		408

L = length of the motor without built-on accessories
ΔL = additional length of the built-on accessories (longest type)

Dimensions, 4-pole motors

g500-H8000

Dimensions with solid shaft and flange
Gearbox design: VCK

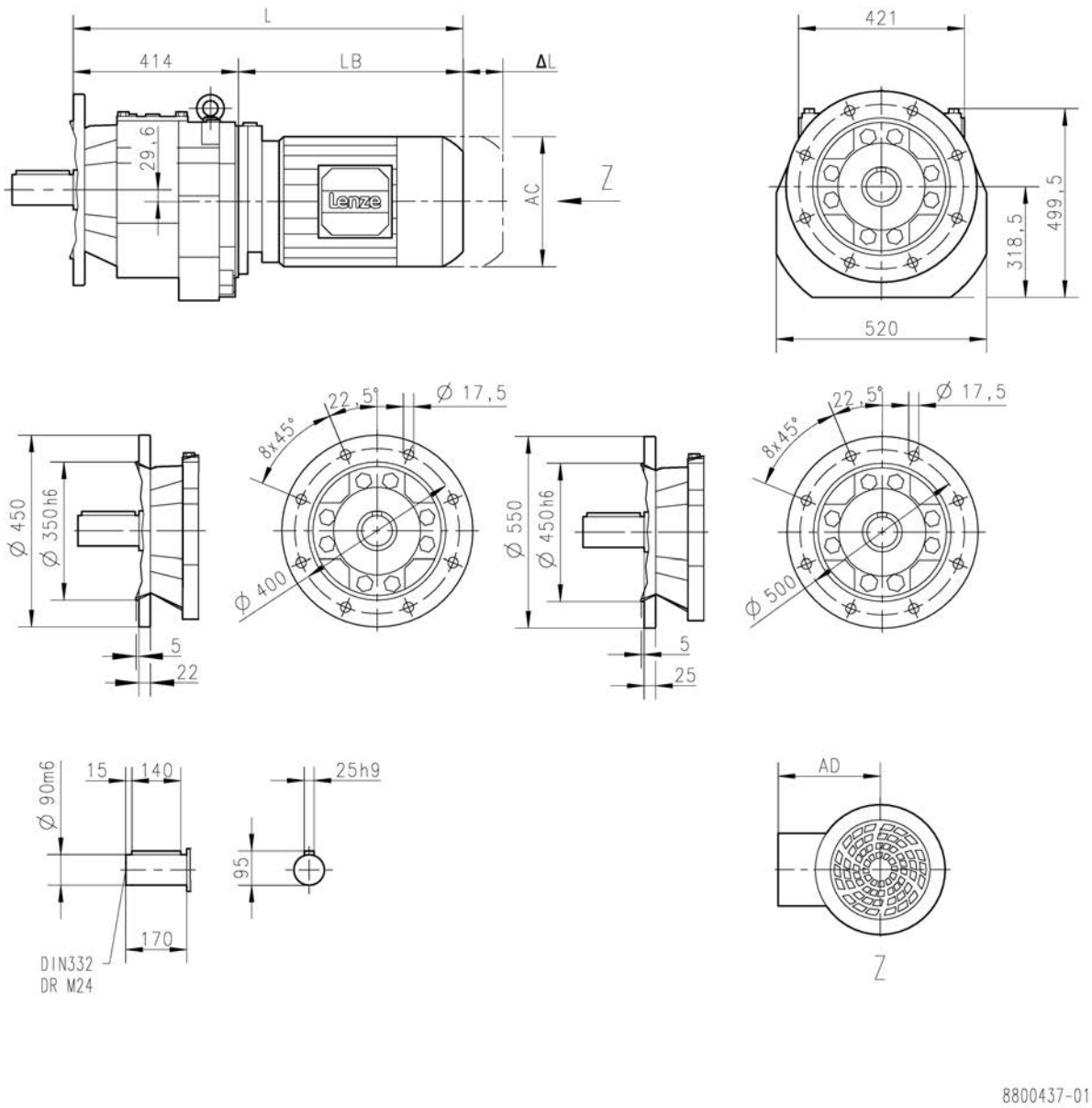

			m540							
			-P100/M4	-P100/L4	-P112/M4	-P132/M4	-P132/L4	-P160/M4	-P160/L4	-P180/M4
Total length	L	[mm]	805			876		908	968	981
Motor length	LB	[mm]	391			462		494	554	567
Length of motor options	Δ L	[mm]	219		206	259		285		274
Motor diameter	AC	[mm]	198		222	264		318		353
Distance motor/connection	AD	[mm]	171		182	207		241		292

L = length of the motor without built-on accessories
ΔL = additional length of the built-on accessories (longest type)

Dimensions, 4-pole motors

g500-H8000

Dimensions with solid shaft and flange
Gearbox design: VCK

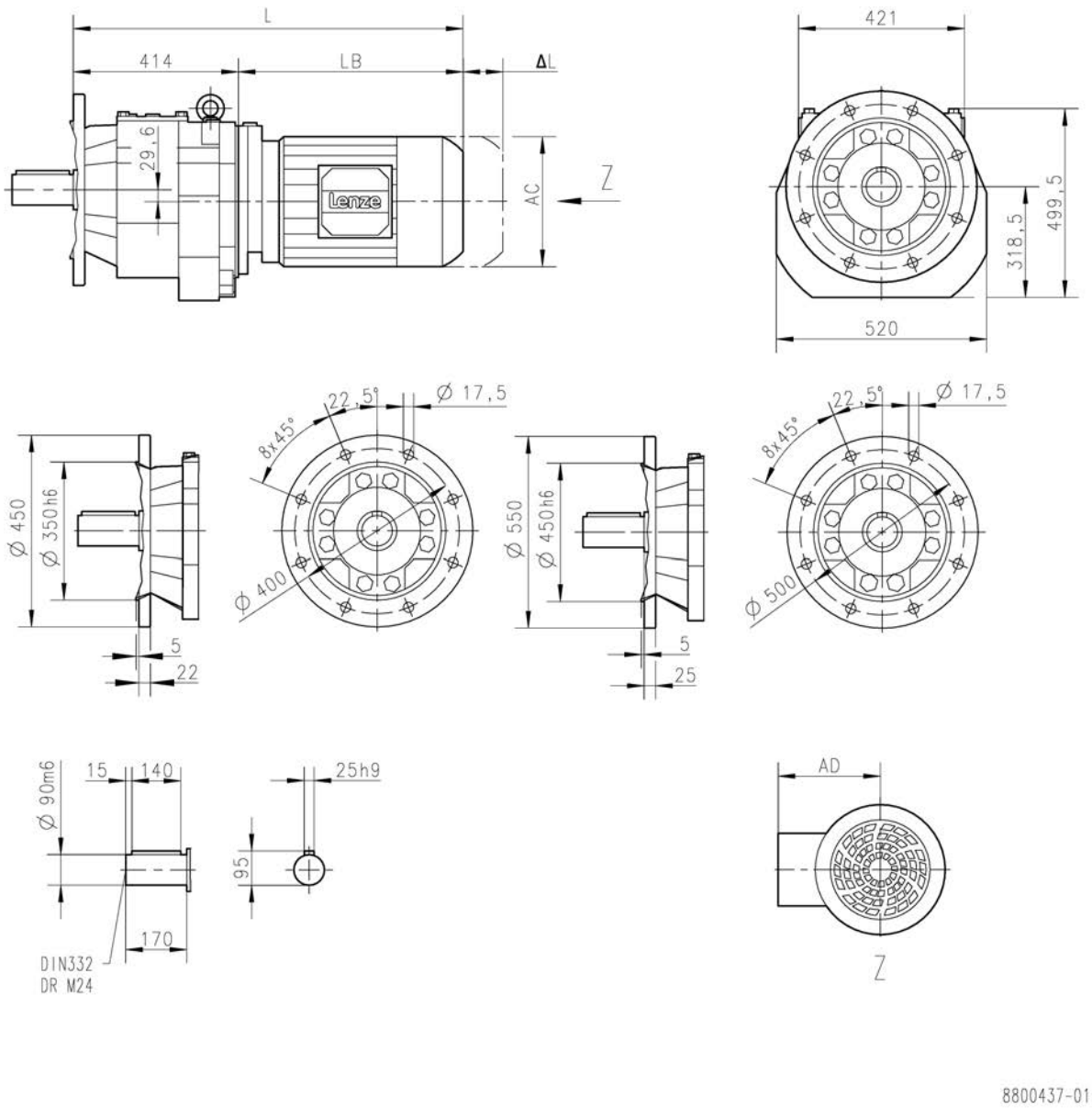

			m540				
			-P180/L4	-P200/M4	-P225/M4	-P225/L4	-P250/M4
Total length	L	[mm]	1011	1074	1095	1155	1206
Motor length	LB	[mm]	597	660	681	741	792
Length of motor options	Δ L	[mm]	274	293	787		827
Motor diameter	AC	[mm]	353	393	439		487
Distance motor/connection	AD	[mm]	292	315	337		408

L = length of the motor without built-on accessories
ΔL = additional length of the built-on accessories (longest type)

Dimensions, 4-pole motors

g500-H14000

Dimensions with solid shaft
Gearbox design: VBR

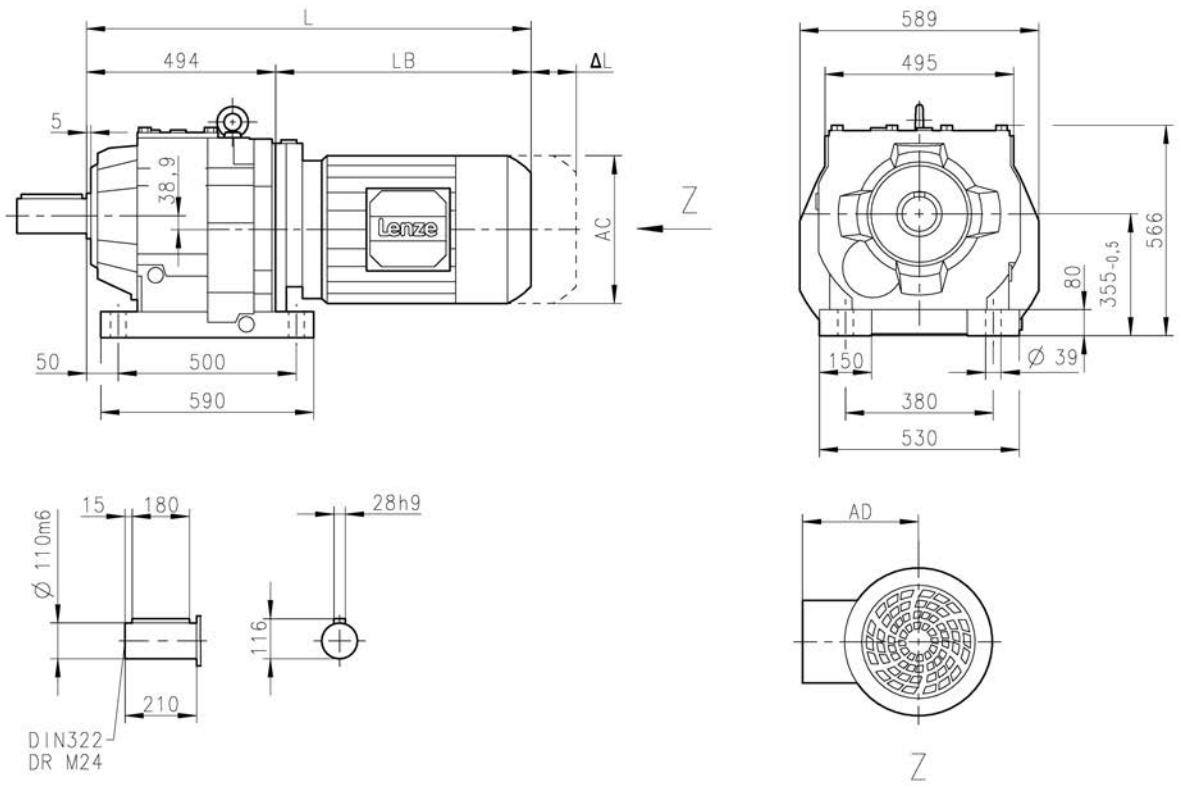

			m540							
			-P112/M4	-P132/M4	-P132/L4	-P160/M4	-P160/L4	-P180/M4	-P180/L4	-P200/M4
Total length	L	[mm]	873	943		975	1035	1048	1078	1141
Motor length	LB	[mm]	379	449		481	541	554	584	647
Length of motor options	Δ L	[mm]	206	259		285		274		293
Motor diameter	AC	[mm]	222	264		318		353		393
Distance motor/connection	AD	[mm]	182	207		241		292		315

L = length of the motor without built-on accessories
ΔL = additional length of the built-on accessories (longest type)

Dimensions, 4-pole motors

g500-H14000

Dimensions with solid shaft
Gearbox design: VBR

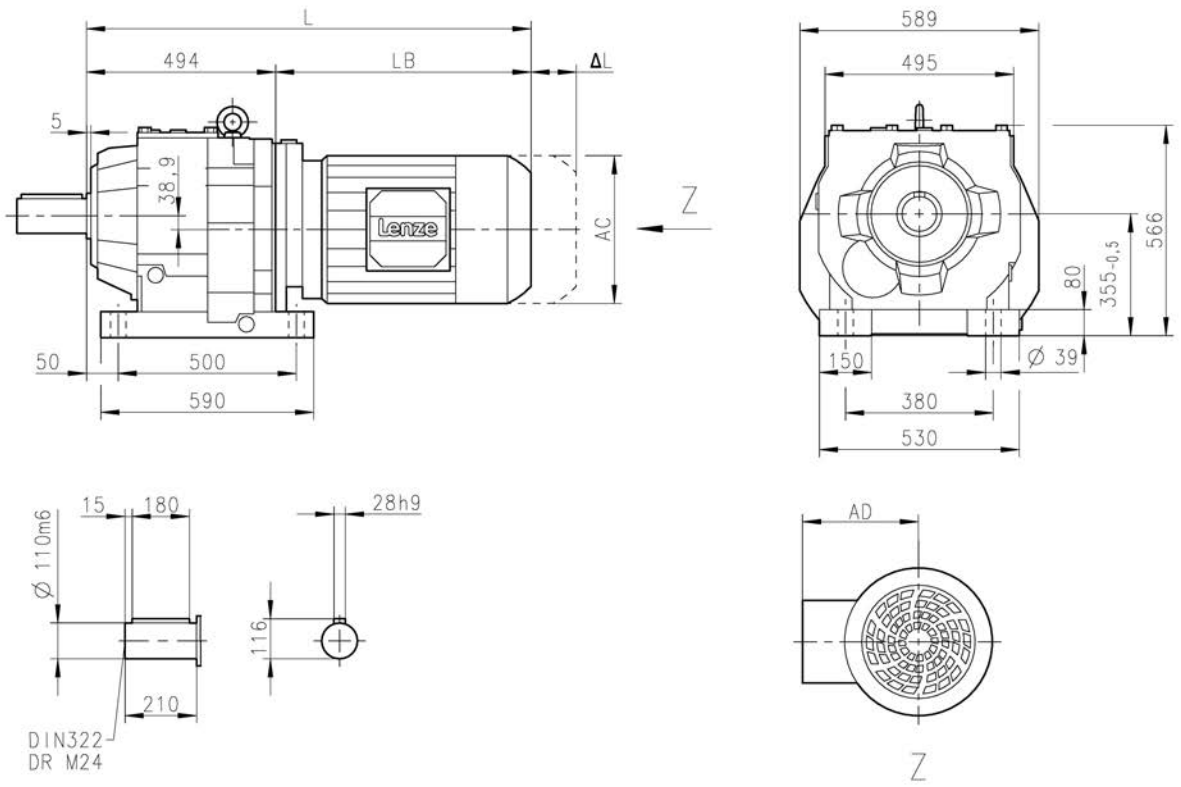

			m540		
			-P225/M4	-P225/L4	-P250/M4
Total length	L	[mm]	1160	1220	1268
Motor length	LB	[mm]	666	726	774
Length of motor options	Δ L	[mm]	787		827
Motor diameter	AC	[mm]	439		487
Distance motor/connection	AD	[mm]	337		408

L = length of the motor without built-on accessories
ΔL = additional length of the built-on accessories (longest type)

Dimensions, 4-pole motors

g500-H14000

Dimensions with solid shaft and flange
Gearbox design: VCK

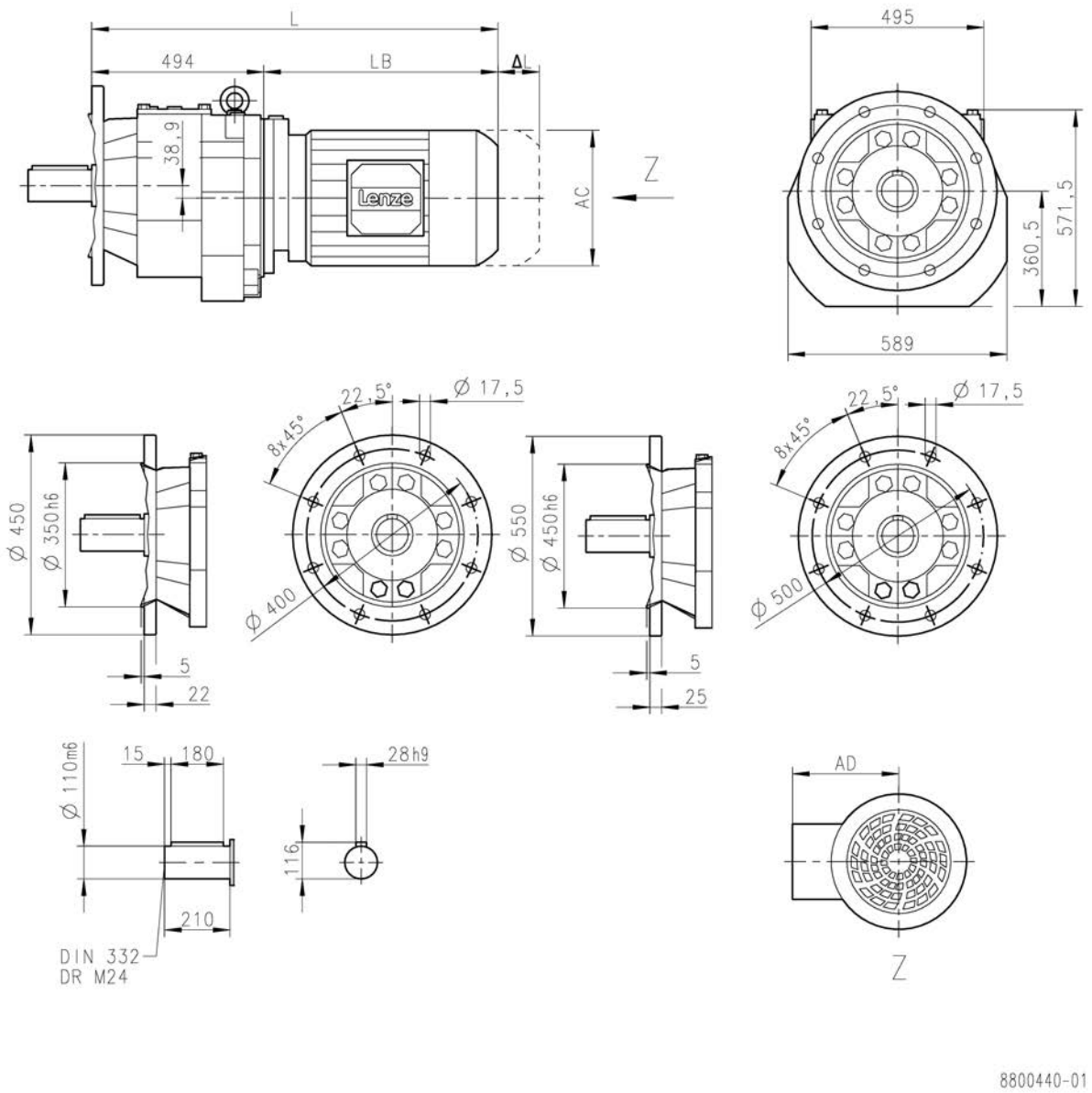

			m540							
			-P112/M4	-P132/M4	-P132/L4	-P160/M4	-P160/L4	-P180/M4	-P180/L4	-P200/M4
Total length	L	[mm]	873	943		975	1035	1048	1078	1141
Motor length	LB	[mm]	379	449		481	541	554	584	647
Length of motor options	Δ L	[mm]	206	259		285		274		293
Motor diameter	AC	[mm]	222	264		318		353		393
Distance motor/connection	AD	[mm]	182	207		241		292		315

L = length of the motor without built-on accessories
ΔL = additional length of the built-on accessories (longest type)

Dimensions, 4-pole motors

g500-H14000

Dimensions with solid shaft and flange
Gearbox design: VCK

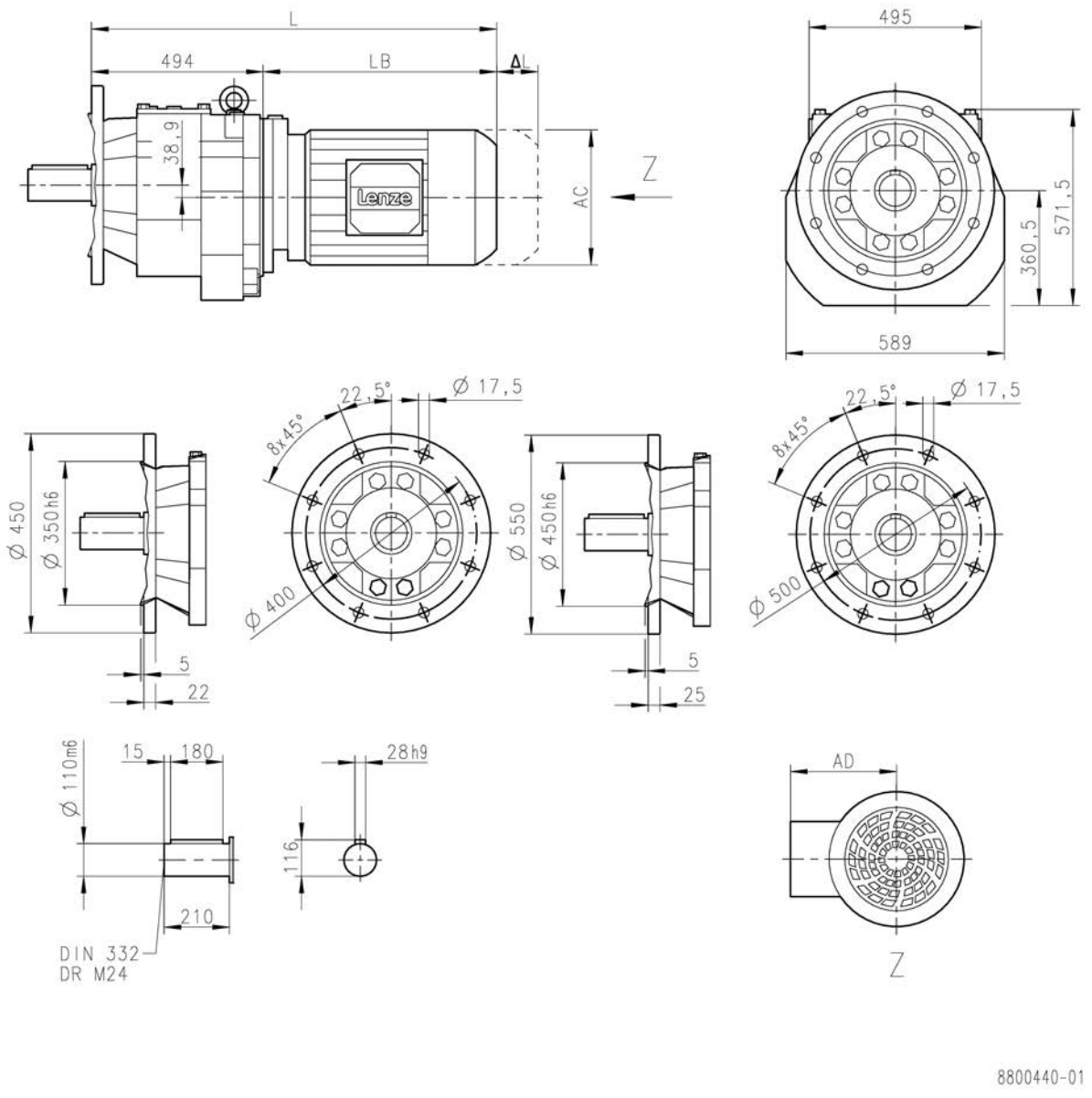

			m540		
			-P225/M4	-P225/L4	-P250/M4
Total length	L	[mm]	1160	1220	1268
Motor length	LB	[mm]	666	726	774
Length of motor options	Δ L	[mm]	787		827
Motor diameter	AC	[mm]	439		487
Distance motor/connection	AD	[mm]	337		408

L = length of the motor without built-on accessories
ΔL = additional length of the built-on accessories (longest type)

Additional length of the built-on accessories

Dimensions, self-ventilated (4-pole)

Product			MD□MA□□		
			063-02 063-22	063-12 063-32 063-42	071-32 071-42
Brake					
	Δ L	[mm]	71.0	40.0	52.0
Feedback					
	Δ L	[mm]	71.0	56.0	52.0
Brake + Feedback					
	Δ L	[mm]	135	103	96.0

Product			m550						
			-P80/M4	-P90/M4 -P90/L4	-P100/M4 -P100/L4	-P112/M4	-P132/M4 -P132/L4	-P160/M4 -P160/L4	-P180/M4 -P180/L4 -P180/V4
Brake									
	Δ L	[mm]	73.0	62.0	76.0	90.0	79.0	105	103
Feedback									
	Δ L	[mm]	97.0	82.0	81.0	80.0	102	105	79.0
Brake + Feedback									
	Δ L	[mm]	110	99.0	101	120	124	191	182

Product			m540					
			-P90/L4	-P100/M4 -P100/L4	-P112/M4	-P132/M4 -P132/L4	-P160/M4 -P160/L4	-P180/M4 -P180/L4
Brake								
	Δ L	[mm]	70.0	78.5	73.0	105	116	129
Feedback								
	Δ L	[mm]	92.5	93.5	95.0			
Brake + Feedback								
	Δ L	[mm]	163	172	168	200	211	224

Product			m540		
			-P200/M4	-P225/M4 -P225/L4	-P250/M4
Brake					
	Δ L	[mm]	147	239	225
Feedback					
	Δ L	[mm]	95.0	125	
Brake + Feedback					
	Δ L	[mm]	242	364	

Additional length of the built-on accessories

Dimensions, forced ventilated (4-pole)

Product			MD□MA□□	
			063-12 063-32 063-42	071-32 071-42
Brake				
	Δ L	[mm]	128	
Feedback				
	Δ L	[mm]	170	165
Brake + Feedback				
	Δ L	[mm]	128	

Product			m550						
			-P80/M4	-P90/M4 -P90/L4	-P100/M4 -P100/L4	-P112/M4	-P132/M4 -P132/L4	-P160/M4 -P160/L4	-P180/M4 -P180/L4 -P180/V4
Brake									
	Δ L	[mm]	183	175	170	183	201	179	207
Feedback									
	Δ L	[mm]	127	122	109	183	201	237	207
Brake + Feedback									
	Δ L	[mm]	183	175	170	183	201	237	267

Product			m540					
			-P90/L4	-P100/M4 -P100/L4	-P112/M4	-P132/M4 -P132/L4	-P160/M4 -P160/L4	-P180/M4 -P180/L4
Brake								
	Δ L	[mm]	120	122	113	165	191	199
Feedback								
	Δ L	[mm]	213	219	206	259	285	274
Brake + Feedback								
	Δ L	[mm]	213	219	206	259	285	274

Product			m540		
			-P200/M4	-P225/M4 -P225/L4	-P250/M4
Brake					
	Δ L	[mm]	233		
Feedback					
	Δ L	[mm]	293	787	827
Brake + Feedback					
	Δ L	[mm]	293		

Weights, 4-pole motors

► Weights with oil capacity for mounting position A, all given as approximate values.
The weights refer to the basic version, observe additional weights!

2-stage gearboxes

Product		Mass
		m
		[kg]
g500-H45	MD□MA□□063-02	5.20
	MD□MA□□063-12	5.70
	MD□MA□□063-22	5.20
	MD□MA□□063-32	5.70
	MD□MA□□063-42	6.00
	MD□MA□□071-32	7.40
	MD□MA□□071-42	8.00
g500-H100	MD□MA□□063-12	7.70
	MD□MA□□063-32	
	MD□MA□□063-42	8.00
	MD□MA□□071-32	9.40
	MD□MA□□071-42	10.0
	m550-P80/M4	18.5
	m550-P90/M4	23.5
	m550-P90/L4	24.5
g500-H140	MD□MA□□063-12	8.80
	MD□MA□□063-32	
	MD□MA□□063-42	9.10
	MD□MA□□071-32	10.5
	MD□MA□□071-42	11.1
	m550-P80/M4	19.6
	m550-P90/M4	24.6
	m550-P90/L4	25.6
g500-H210	MD□MA□□063-12	10.2
	MD□MA□□063-32	
	MD□MA□□063-42	10.5
	MD□MA□□071-32	11.9
	MD□MA□□071-42	12.5
	m550-P80/M4	21.0
	m550-P90/M4	26.0
	m550-P90/L4	27.0
	m550-P100/M4	37.0
	m550-P100/L4	39.0
g500-H320	MD□MA□□063-12	12.1
	MD□MA□□063-32	
	MD□MA□□063-42	12.4
	MD□MA□□071-32	13.8
	MD□MA□□071-42	14.4
	m550-P80/M4	22.9
	m550-P90/M4	27.9
	m550-P90/L4	28.9

Product		Mass
		m
		[kg]
g500-H320	m550-P100/M4	38.9
	m550-P100/L4	40.9
	m550-P112/M4	43.9
g500-H450	MD□MA□□063-42	15.8
	MD□MA□□071-32	17.2
	MD□MA□□071-42	17.8
	m550-P80/M4	26.3
	m550-P90/M4	31.3
	m550-P90/L4	32.3
	m550-P100/M4	42.3
	m550-P100/L4	44.3
	m550-P112/M4	47.3
	m550-P132/M4	68.3
	m550-P132/L4	80.3
g500-H600	MD□MA□□063-42	27.0
	MD□MA□□071-32	28.4
	MD□MA□□071-42	29.0
	m550-P80/M4	37.5
	m550-P90/M4	42.5
	m550-P90/L4	43.5
	m550-P100/M4	53.5
	m550-P100/L4	55.5
	m550-P112/M4	58.5
	m550-P132/M4	79.5
	m550-P132/L4	91.5
g500-H850	MD□MA□□071-42	37.9
	m550-P80/M4	46.4
	m550-P90/M4	51.4
	m550-P90/L4	52.4
	m550-P100/M4	62.4
	m550-P100/L4	64.4
	m550-P112/M4	67.4
	m550-P132/M4	88.4
	m550-P132/L4	100
g500-H1500	MD□MA□□071-42	69.5
	m550-P90/M4	81.5
	m550-P90/L4	82.5
	m550-P100/M4	92.5
	m550-P100/L4	94.5
	m550-P112/M4	97.5
	m550-P132/L4	131

Weights, 4-pole motors

► Weights with oil capacity for mounting position A, all given as approximate values.
The weights refer to the basic version, observe additional weights!

2-stage gearboxes

Product		Mass
		m
		[kg]
g500-H1500	m550-P132/M4	119
	m550-P160/M4	170
	m550-P160/L4	181
	m550-P180/M4	219
g500-H3000	m550-P100/M4	134
	m550-P100/L4	136
	m550-P112/M4	139
	m550-P132/M4	160
	m550-P132/L4	172
	m550-P160/M4	211
	m550-P160/L4	222
	m550-P180/M4	260
	m550-P180/L4	
g500-H5000	m540-P100/M4	184
	m540-P100/L4	
	m540-P112/M4	
	m540-P132/M4	212
	m540-P132/L4	
	m540-P160/M4	228
	m540-P160/L4	245
	m540-P180/M4	320
	m540-P180/L4	325
	m540-P200/M4	395
	m540-P225/M4	440
	m540-P225/L4	475
g500-H8000	m540-P112/M4	263
	m540-P132/M4	291
	m540-P132/L4	
	m540-P160/M4	307
	m540-P160/L4	324
	m540-P180/M4	399
	m540-P180/L4	404
	m540-P200/M4	474
	m540-P225/M4	519
	m540-P225/L4	554
	m540-P250/M4	654

Product		Mass
		m
		[kg]
g500-H14000	m540-P160/M4	446
	m540-P160/L4	463
	m540-P180/M4	538
	m540-P180/L4	543
	m540-P200/M4	613
	m540-P225/M4	658
	m540-P225/L4	693

Weights, 4-pole motors

► Weights with oil capacity for mounting position A, all given as approximate values.
The weights refer to the basic version, observe additional weights!

3-stage gearboxes

Product		Mass
		m
		[kg]
g500-H210	MD□MA□□063-12	10.4
	MD□MA□□063-32	
	MD□MA□□063-42	10.7
	MD□MA□□071-32	12.1
	MD□MA□□071-42	12.7
	m550-P80/M4	21.2
g500-H320	MD□MA□□063-12	12.3
	MD□MA□□063-32	
	MD□MA□□063-42	12.6
	MD□MA□□071-32	14.0
	MD□MA□□071-42	14.6
	m550-P80/M4	23.1
g500-H450	MD□MA□□063-12	15.9
	MD□MA□□063-32	
	MD□MA□□063-42	16.2
	MD□MA□□071-32	17.6
	MD□MA□□071-42	18.2
	m550-P80/M4	26.7
	m550-P90/M4	31.7
	m550-P90/L4	32.7
g500-H600	MD□MA□□063-12	27.6
	MD□MA□□063-32	
	MD□MA□□063-42	27.9
	MD□MA□□071-32	29.3
	MD□MA□□071-42	29.9
	m550-P80/M4	38.4
	m550-P90/M4	43.4
	m550-P90/L4	44.4
	m550-P100/M4	54.4
	m550-P100/L4	56.4
g500-H850	MD□MA□□063-42	37.0
	MD□MA□□071-32	38.4
	MD□MA□□071-42	39.0
	m550-P80/M4	47.5
	m550-P90/M4	52.5
	m550-P90/L4	53.5
	m550-P100/M4	63.5
	m550-P100/L4	65.5
	m550-P112/M4	68.5
	m550-P132/M4	89.5

Product		Mass
		m
		[kg]
g500-H1500	MD□MA□□071-42	69.5
	m550-P80/M4	78.0
	m550-P90/M4	83.0
	m550-P90/L4	84.0
	m550-P100/M4	94.0
	m550-P100/L4	96.0
	m550-P112/M4	99.0
	m550-P132/M4	120
g500-H3000	m550-P90/M4	128
	m550-P90/L4	129
	m550-P100/M4	139
	m550-P100/L4	141
	m550-P112/M4	144
	m550-P132/M4	165
	m550-P132/L4	177
	m550-P160/M4	216
g500-H5000	m540-P90/L4	174
	m540-P100/M4	188
	m540-P100/L4	
	m540-P112/M4	
	m540-P132/M4	216
	m540-P132/L4	
	m540-P160/M4	232
	m540-P160/L4	249
g500-H8000	m540-P100/M4	270
	m540-P100/L4	
	m540-P112/M4	
	m540-P132/M4	298
	m540-P132/L4	
	m540-P160/M4	314
	m540-P160/L4	331
	m540-P180/M4	406
	m540-P180/L4	411
	m540-P200/M4	481
	m540-P225/M4	526
	m540-P225/L4	561
	m540-P250/M4	661
g500-H14000	m540-P112/M4	415
	m540-P132/M4	443
	m540-P132/L4	

Weights, 4-pole motors

► Weights with oil capacity for mounting position A, all given as approximate values.
The weights refer to the basic version, observe additional weights!

3-stage gearboxes

Product		Mass
		m
		[kg]
g500-H14000	m540-P160/M4	459
	m540-P160/L4	476
	m540-P180/M4	551
	m540-P180/L4	556
	m540-P200/M4	626
	m540-P225/M4	671
	m540-P225/L4	706
	m540-P250/M4	806

Additional weights for gearboxes

Product									
			g500-H45	g500-H100	g500-H140	g500-H210	g500-H320	g500-H450	g500-H600
Foot	m	[kg]	0.1	0.1	0.2	0.1	0.1	0.2	2.0
Flange	m	[kg]	0.3	0.4	0.6	0.6	0.8	0.9	4.3

Product								
			g500-H850	g500-H1500	g500-H3000	g500-H5000	g500-H8000	g500-H14000
Foot	m	[kg]	2.8	4.3	5.8	16.0	26.0	44.0
Flange	m	[kg]	7.6	8.3	20.1	22.3	36.4	36.4

VCP gearbox version

Product							
			g500-H100	g500-H140	g500-H210	g500-H320	g500-H450
Flange	m	[kg]	2.0	3.9	3.9	4.1	6.1

Additional weights for motors

4-pole motors

Product					
			MD□MA□□		
			063-02 063-22	063-12 063-32 063-42	071-32 071-42
Brake			06		06 08
	m	[kg]	0.9		0.9 1.5
Blower					
	m	[kg]		2.0	2.1

Product								
			m550						
			-P80/M4	-P90/M4 -P90/L4	-P100/M4 -P100/L4	-P112/M4	-P132/M4 -P132/L4	-P160/M4 -P160/L4	-P180/M4 -P180/L4 -P180/V4
Brake			08 10		10 12	12 14	14 16	16 18	18 20
	m	[kg]	1.5 2.6		2.6 4.2	4.2 5.8	5.8 8.7	8.7 12.6	12.6 19.5
Blower									
	m	[kg]	2.3	2.7	3.0	3.1	5.0	7.3	10.3

Additional weights for motors

4-pole motors

Product			m540				
			-P90/L4	-P100/M4 -P100/L4	-P112/M4	-P132/M4 -P132/L4	-P160/M4 -P160/L4
Brake			08E 10E 12E	10E 12E 14E	12E 14E	16E 18E	20E 18E
	m	[kg]	1.5 2.6 4.2	2.6 4.2 5.8	4.2 5.8	8.7 12.6	12.6 12.6
Blower							
	m	[kg]	1.9	2.1	2.2	3.0	4.2

Product			m540			
			-P180/M4 -P180/L4	-P200/M4	-P225/M4 -P225/L4	-P250/M4
Brake			20E	20E 25E	25E 30E	30E 40E
	m	[kg]	12.6	12.6 31.0	31.0 45.0	45.0 80.0
Blower						
	m	[kg]	8.2	9.8	22.0	

Gearbox code

Example		G	50	A	H	045	M	V	B	R	2	C	1A
Meaning	**Variant**												
Product family		G	50										
Generation				A									
				B									
Gearbox type	Helical gearbox				H								
Output torque	45 Nm					045							
	100 Nm					110							
	140 Nm					114							
	210 Nm					121							
	320 Nm					132							
	450 Nm					145							
	600 Nm					160							
	850 Nm					185							
	1500 Nm					215							
	3000 Nm					230							
	5000 Nm					250							
	8000 Nm					280							
	14000 Nm					314							
Type of construction	Geared motor						M						
	Gearboxes						N						
Shaft type	Solid shaft with feather key							V					
	Solid shaft without keyway							G					
Housing type	Foot mounting + centering								A				
	Foot mounting								B				
	Centering								C				
Flange mounting	Without flange									R			
	Flange with through holes									k			
										P			
Number of stages	2-stage										2		
	3-stage										3		
Motor mounting	Integrated											C	
	IEC motor											N	
	NEMA motor											A	
	Servo motor											S	
Drive size													1A ... □H

Motor code

Example	M	D	E	MA	XX	063	-	4	2	C1	C

Meaning	Variant	Motor code										
Product family		M										
Efficiency class	IE1		D									
Cooling	Natural ventilation			S								
	Integral fan			E								
	Blower			F								
Internal key					MA							
Built-on accessories	Without built-on accessories					XX						
	Brake					BR						
	Brake + resolver					BS						
	Brake + incremental encoder					BI						
	Brake + SinCos absolute value encoder					BA						
	Resolver					RS						
	Incremental encoder					IG						
	SinCos absolute value encoder					AG						
Size							063					
							071					
Overall length								-	0			
									1			
									2			
									3			
									4			
Number of pole pairs	4-pole motors									2		
	2-pole motors									1		
Internal key											C1	
Approval	CE											C
	cURus											U
	CCC											3

Motor code

Example	M	55	A	P	080	M	04	5	E	0	0	W	T

Meaning	Variant	Motor code												
Product family		M	54											
			55											
Generation				A										
Efficiency class	Premium - IE3				P									
Size						080								
						090								
						100								
						112								
						132								
						160								
						180								
						200								
						225								
						250								
Overall length	Medium						M							
	Long						L							
	Very long						V							
Number of poles	4-pole							04						
Degree of protection	IP5□								5					
	IP6□								6					
Cooling	Integral fan									E				
	Blower									F				
Brake attachment	Without brake										0			
	Spring-applied brake										F			
Actual value encoder	Without encoder											0		
	Resolver											R		
	Absolute value encoder											A		
	Incremental encoder											E		
Approval	CE												C	
	CE, CCC												3	
	CE, cURus												U	
	CE, cURus, CCC												W	
Design type	Internal key													M
														T

g500-S shaft-mounted helical geared motors

Inverter operation
0.12 ... 0.55 kW (efficiency class IE1)
0.75 ... 55 kW (efficiency class IE3)

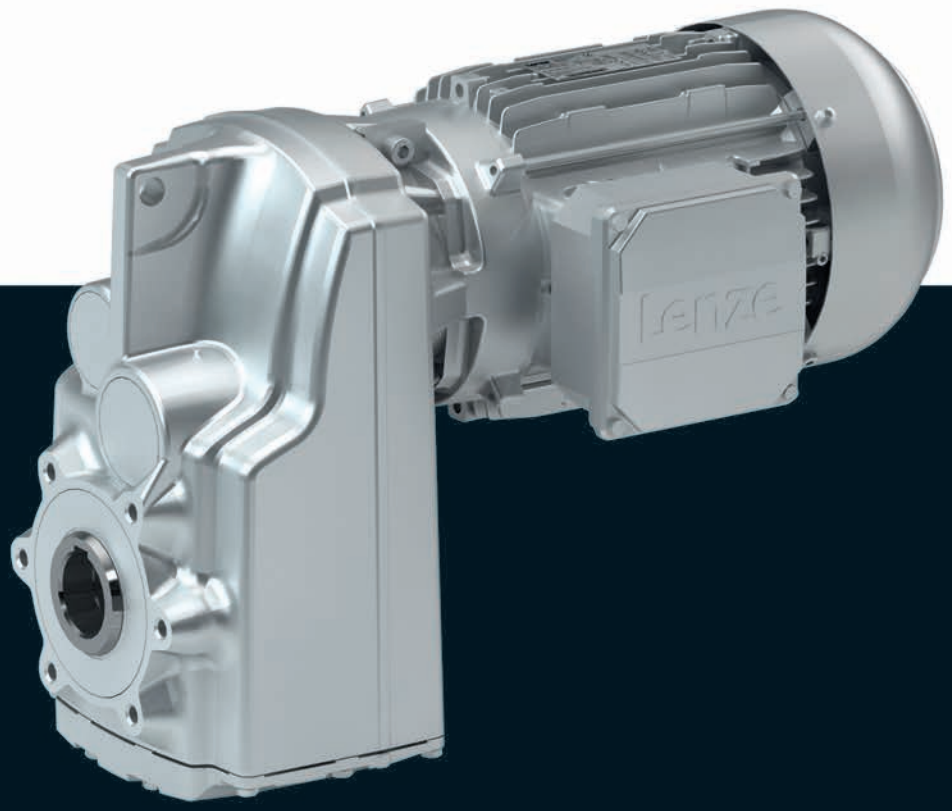

g500-S shaft-mounted helical geared motors

Contents

General information	List of abbreviations	6.4 - 4
	Product information	6.4 - 6
	Equipment	6.4 - 7
	The geared motor kit	6.4 - 10
Project planning	General information about the data provided in this catalogue	6.4 - 21
	Procedure of a configuration process	6.4 - 22
	Standards	6.4 - 30
	Thermal power limit	6.4 - 33
	Load capacity and application factor	6.4 - 34
	Operational performance of three-phase AC geared motors	6.4 - 35
	Technical data at a glance	6.4 - 38
	Gearbox with mounting flange	6.4 - 59
	Surface and corrosion protection	6.4 - 64
	Lubricants	6.4 - 66
	Ventilation	6.4 - 67
Technical data	Standards and operating conditions	6.4 - 75
	Permissible radial and axial forces at output	6.4 - 76
	Selection tables, notes	6.4 - 79
	Selection tables, 4-pole motors	6.4 - 80
	Dimensions, notes	6.4 - 152
	Dimensions, 4-pole motors	6.4 - 153
	Shrink disc dimensions	6.4 - 241
	Additional length of the built-on accessories	6.4 - 242
	Weights, 4-pole motors	6.4 - 244
	Additional weights for gearboxes	6.4 - 248
	Additional weights for motors	6.4 - 248
Product extensions	Overview	6.4 - 251
	Torque plate	6.4 - 252
	Shaft cover	6.4 - 253
Appendix	Gearbox code	6.4 - 255
	Motor code	6.4 - 256

List of abbreviations

α	[rad/s²]	Max. permissible angular acceleration
$\eta_{50\,\%}$	[%]	Efficiency
$\eta_{75\,\%}$	[%]	Efficiency
$\eta_{100\,\%}$	[%]	Efficiency
η_a		Efficiency
$\eta_{c=1}$		Efficiency
c		Load capacity
cos ϕ		Power factor
du/dt	[kV/µs]	Insulation resistance
$F_{ax,-}$	[N]	Min. axial force
$F_{ax,+}$	[N]	Max. axial force
$F_{ax,max}$	[N]	Max. axial force
$f_{in,max}$	[Hz]	Max. input frequency
f_{max}	[kHz]	Limit frequency
f_{max}	[kHz]	Max. switching frequency
f_N	[Hz]	Rated frequency
$F_{rad,max}$	[N]	Max. radial force
f_z		Additional radial force factor
H_{max}	[m]	Site altitude
I_0	[A]	Standstill current
i		Ratio
$I_{in,max}$	[A]	Max. input current
I_{max}	[A]	Max. current consumption
I_{max}	[A]	Max. current
I_{max}	[A]	Max. current consumption
I_{max}	[A]	Max. current
I_{max}	[A]	Max. short-time DC-bus current
I_{max}	[A]	Max. DC-bus current
I_N	[A]	Rated current
$I_{N,\Delta}$	[A]	Rated current
$I_{N,Y}$	[A]	Rated current
J	[kgcm²]	Moment of inertia
J_{MB}	[kgcm²]	Moment of inertia
$KE_{LL\,150\,°C}$	[V /(1000 r/min)]	Voltage constant
$Kt_{0\,150\,°C}$	[Nm/A]	Torque constant
L_{10}	[h]	Bearing service life
L	[mH]	Mutual inductance
$L_{1\sigma}$	[mH]	Stator leakage inductance
$L_{2\sigma}$	[mH]	Rotor leakage inductance
L_N	[mH]	Rated inductance
m	[kg]	Mass
M_2	[Nm]	Output torque
M_{22}	[Nm]	Output torque
M_0	[Nm]	Stall torque
$M_{0,\,max}$	[Nm]	Max. standstill torque
$M_{2,\,GM}$	[Nm]	Output torque
$M_{2,\,max}$	[Nm]	Max. output torque
$M_{2,\,not}$	[Nm]	Emergency off-torque

M_a	[Nm]	Starting torque
$M_{a_,\,1}$	[Nm]	Starting torque
$M_{a_,\,2}$	[Nm]	Starting torque
M_{av}	[Nm]	Average dynamic torque
M_b	[Nm]	Stalling torque
M_B	[Nm]	Braking torque
M_k	[Nm]	Rated torque
M_{max}	[Nm]	Max. torque
M_N	[Nm]	Rated torque
n_2	[r/min]	Output speed
n_{21}	[r/min]	Output speed
n_{22}	[r/min]	Output speed
$n_{1,\,max}$	[r/min]	Max. gearbox input speed
$n_{1,\,max\,50\%}$	[r/min]	Max. gearbox input speed
n_{eto}	[r/min]	Transition speed
n_k	[r/min]	Speed
n_{max}	[r/min]	Max. speed
n_N	[r/min]	Rated speed
P_{max}	[kW]	Max. power input
Q_{BW}	[MJ]	Friction energy
Q_E	[J]	Maximum switching energy
Q_E	[KJ]	Maximum switching energy
R_1	[Ω]	Stator impedance
R_2	[Ω]	Rotor impedance
R	[Ω]	Insulation resistance
R	[Ω]	Min. insulation resistance
$R_{UV\,150\,°C}$	[Ω]	Stator impedance
$R_{UV\,20\,°C}$	[Ω]	Stator impedance
$S_{hü}$	[1/h]	Transition operating frequency
t_1	[ms]	Engagement time
t_2	[ms]	Disengagement time
t_{11}	[ms]	Delay time
t_{12}	[ms]	Rise time
T	[°C]	Max. surface temperature
T	[°C]	Min. ambient temperature for transport
T	[°C]	Max. ambient temperature for transport
T	[°C]	Max. ambient temperature of bearing
T	[°C]	Min. ambient storage temperature
T	[°C]	Ambient temperature
T	[°C]	Operating temperature
T	[°C]	Rated temperature
t	[h]	Service life
T_{opr}		Ambient operating temperature
$T_{opr,max}$	[°C]	Max. ambient operating temperature
$T_{opr,min}$	[°C]	Min. ambient operating temperature
t_{re}	[s]	Recovery time
$t_ü$	[ms]	Overexcitation time
U_Δ	[V]	Voltage range
U_{AC}	[V]	Mains voltage range

List of abbreviations

U_{AC}	[V]	Mains voltage
$U_{in,max}$	[V]	Max. input voltage
$U_{in,min}$	[V]	Min. input voltage
U_{max}	[V]	Max. input voltage
U_{max}	[V]	Max. mains voltage
U_{min}	[V]	Min. mains voltage
$U_{N,\Delta}$	[V]	Rated voltage
$U_{N,AC}$	[V]	Rated voltage
$U_{N,DC}$	[V]	Rated voltage
$U_{N,Y}$	[V]	Rated voltage
z_g		Number of teeth
Z_{ro}	[Ω]	Rotor impedance
Z_{rs}	[Ω]	Impedance
Z_{so}	[Ω]	Stator impedance
z_t		Number of teeth

CCC	China Compulsory Certificate
CE	Communauté Européenne
CEL	China Energy Label
CSA	Canadian Standards Association
CSAULE	Energy Verified Certificate
cURus	Combined certification marks of UL for the USA and Canada
DIN	Deutsches Institut für Normung e.V.
EAC	Customs union Russia / Belarus / Kazakhstan certificate
EMC	Electromagnetic compatibility
EN	European standard
IM	International Mounting Code
IP	International Protection Code
NEMA	National Electrical Manufacturers Association
UkrSEPRO	Certificate for Ukraine
UL	Underwriters Laboratory Listed Product
UR	Underwriters Laboratory Recognized Product
VDE	Verband deutscher Elektrotechniker (Association of German Electrical Engineers)

Product information

In combination with three-phase AC motors, our shaft-mounted helical gearboxes form a compact and powerful drive unit. Numerous options at the input and output end provide for the drive to be exactly adapted to your application.

The slim shaft-mounted helical gearboxes feature high reliable radial forces, closely stepped gear reductions and a low backlash. They are available in 2-stage and 3-stage design with a torque up to 19000 Nm and a ratio of up to i= 430.

Versions

- Slimline design saves installation space of the machine
- Solid shaft, hollow shaft and shrink disc for direct integration into the machine
- High accuracy with axial output provide for the highest efficiency

Three-phase AC motors as a basis for geared motors

In a power range of 0.12 to 55 kW, Lenze offers inverter-compatible three-phase AC motors for comprehensive tasks.
These drives come in different efficiency classes and can be used for the versions required for the versions required for open-loop or closed-loop controlled inverter operation.

- IE1 motors up to a power of 0.55 kW
- IE3 motors from 0.75 kW to 55 kW

Customer benefit:

- Different efficiency classes for the greatest economic benefit
- Space-saving thanks to compact direct attachment to Lenze gearboxes
- Can be used universally for a wide range of machine tasks due to the market-oriented modular system

The product name

Gearbox type	Product range		Design	Rated torque [Nm]	Product
Shaft-mounted helical gearbox	g500	-	S	130	g500-S130
				220	g500-S220
				400	g500-S400
				660	g500-S660
				950	g500-S950
				2100	g500-S2100
				3100	g500-S3100
				4500	g500-S4500
				8000	g500-S8000
				14000	g500-S14000
				19000	g500-S19000

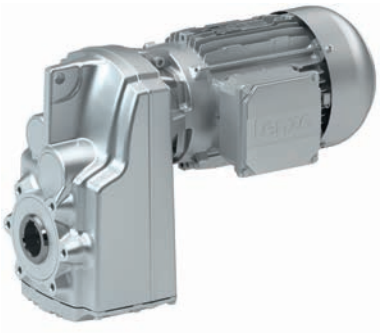

g500-S shaft-mounted helical gearbox with three-phase AC motor

g500-S shaft-mounted helical gearbox with three-phase AC motor and 8400 motec inverter

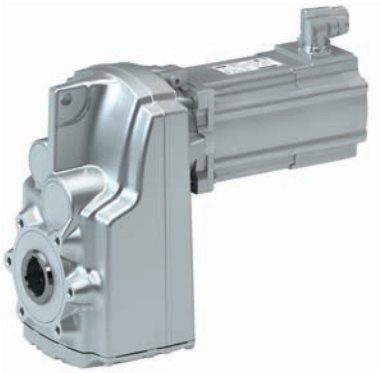

g500-S shaft-mounted helical gearbox with servo motor

Equipment

Overview

The equipment includes all the options available as standard and all the built-on accessories of the product.

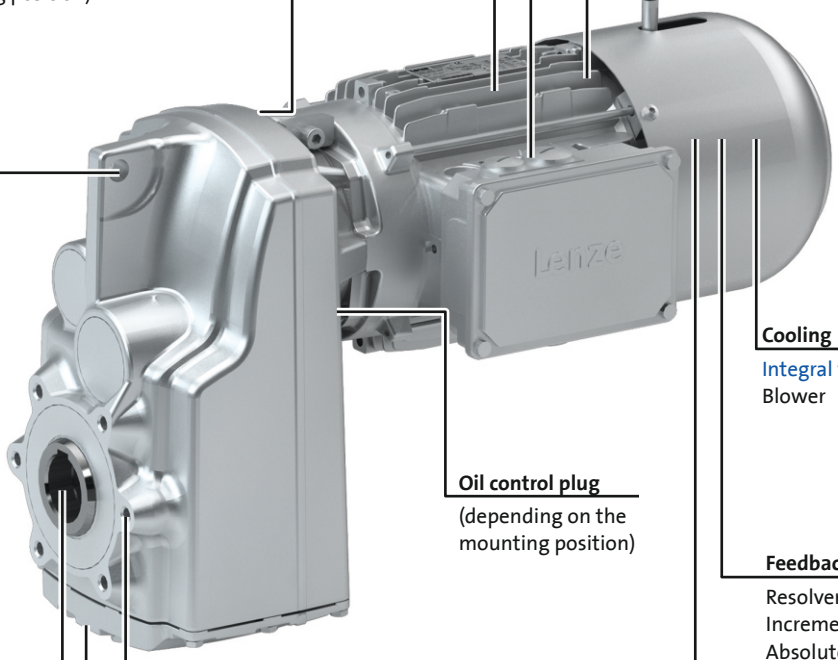

6.4

Standard design

- ► For the m540 motor, only temperature monitoring with PTC is available.
- ► The gearboxes g500-S950 ... S19000 comes with a housing that is always designed with foot.

11 - Detailed information on housing type.

Equipment

Mounting position, position of system components

- ► In the following graphics, the terminal box in position 2 is colour-coded.
  If the mounting position (A ... F) changes, the terminal box positions 2 ... 5 are rotated accordingly.
- ► To reduce the number of different versions, the gearboxes can also be ordered with combined mounting positions:
  - g500-S130 ... S660 in mounting position AEF

Mounting positions A ... F

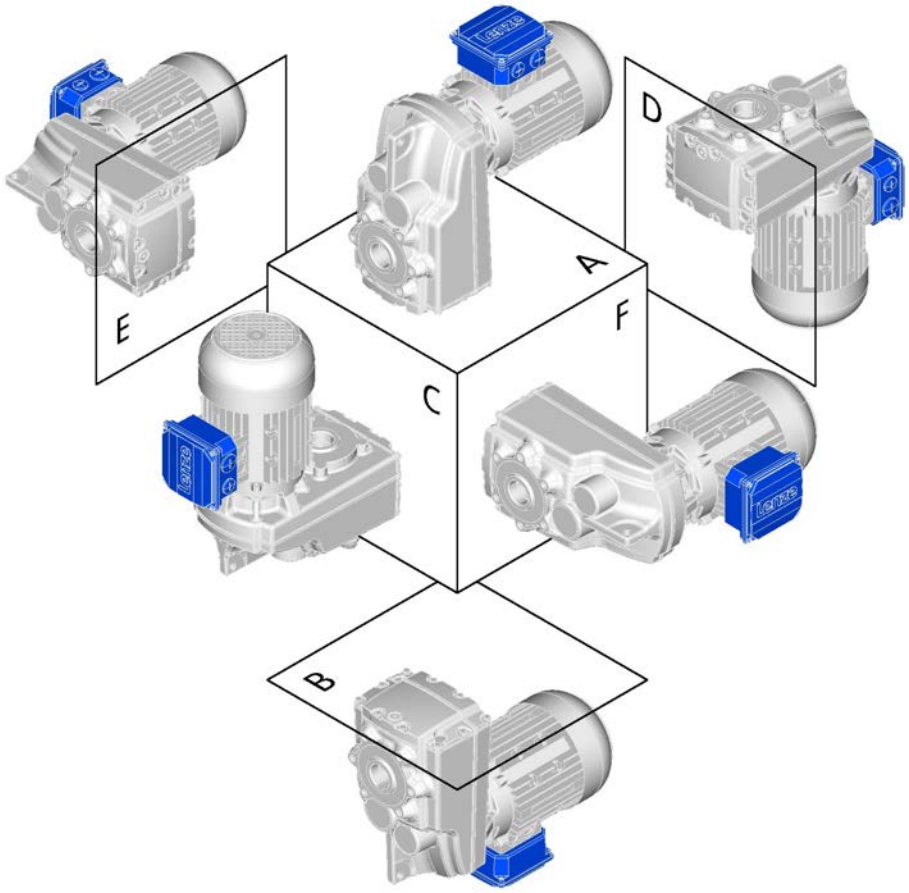

Terminal box positions 2 ... 5

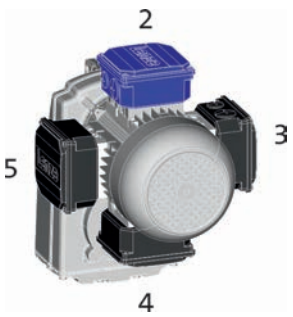

Cable entry positions 1 ... 5

- ► For details regarding the cable entry see motor chapter/product extensions.

Equipment

Mounting position, position of system components

Shrink disc position 1 or 6
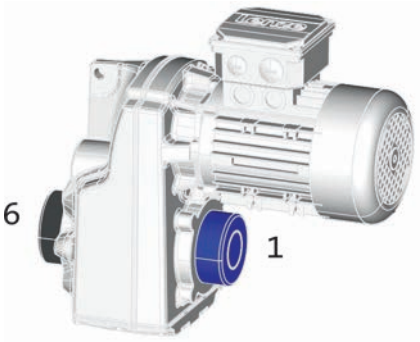

► Solid shaft and flange are only possible in position 6.

The geared motor kit

g500-S130 ... S660

Product				
Gearbox	g500-S130	g500-S220	g500-S400	g500-S660
Motor assignment min.	MD□MA□□-063	MD□MA□□-063	MD□MA□□-063	MD□MA□□-063
Motor assignment max.	m550-P90	m550-P100	m550-P112	m550-P132
Technical data				
Output torque max.	130 Nm	220 Nm	400 Nm	660 Nm
Drive power min.	0.12 kW	0.12 kW	0.12 kW	0.12 kW
Drive power max.	1.5 kW	3.0 kW	4.0 kW	7.5 kW
Dimensions [mm]				
Solid shaft with featherkey	25 x 50	25 x 50	30 x 60	35 x 70 40 x 80
Hollow shaft with keyway	25	25/30	30/35	40/45
Hollow shaft with shrink disc	25	25/30	35	40
Output flange	160	160	200	200/250

- ► The designs are only available for the gearboxes displayed above in the table.
- ► Values printed in bold are standard versions.
  Values not printed in bold are possible extensions, some for an additional charge.

Design	
Conformity	**CE** EAC
Approval	**Without** CCC/cURus
Degree of protection	**IP55** IP65/IP66
Surface and corrosion protec-tion	**Without** Different types of OKS
Colour	**Not coated** Primed/RAL colours
Hollow shaft	**With keyway (H□□)**
Hollow shaft with shrink disc	Without keyway (S□□)
Solid shaft	With featherkey (V□□)
Shaft material	**Steel** stainless steel
Shaft sealing ring material	**NBR** FKM (Viton)
Driven shaft bearing	**Normal**
Paste for shaft mounting	**Without** Enclosed
Gearbox type	**Without foot and centering (□DR)** With centering (□CR) With output flange (□CK) With foot (HBR/VBR)
Lubricant	**Mineral oil** Synthetic oil Food-compatible oil

Design	
Mounting position	**A/B/C/D/E/F** Combined
Power connection	**Terminal box** Plug connectors
Spring-applied brake	**Without** Brake design: Standard/Longlife Brake version: Standard/Overex-cited/Cold Brake
Feedback	**Without** Resolver Absolute value encoder Incremental encoder
Cooling	**Integral fan** Blower
Temperature monitoring	**TKO thermal contact** PTC thermistor KTY thermal detector

The geared motor kit

g500-S130 ... S660

Gearbox design: hollow shaft, without foot		
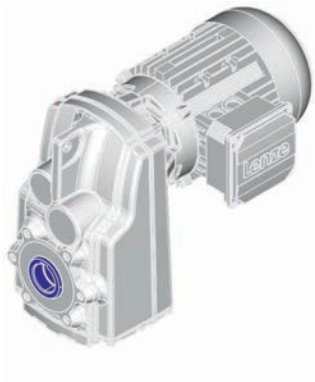 Without centring (HDR)	With centering (HCR)	Flange with through holes (HCK)

Gearbox design: hollow shaft, with foot
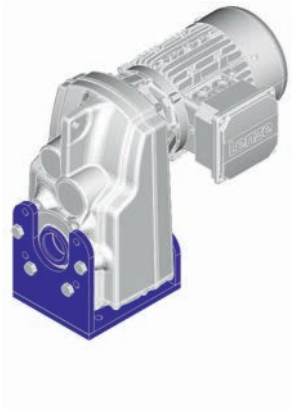 Without centring (HBR)

The geared motor kit

g500-S130 ... S660

Gearbox design: hollow shaft with shrink disc, without foot
Without centring (SDR) With centering (SCR) Flange with through holes (SCK)

The geared motor kit

g500-S130 ... S660

Gearbox design: solid shaft, without foot
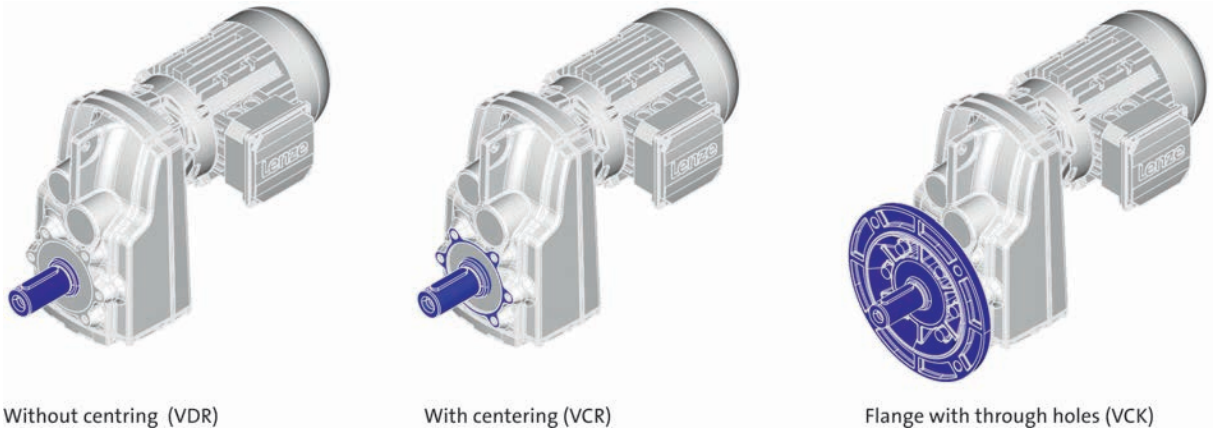 Without centring (VDR) With centering (VCR) Flange with through holes (VCK)

Gearbox design: solid shaft, with foot
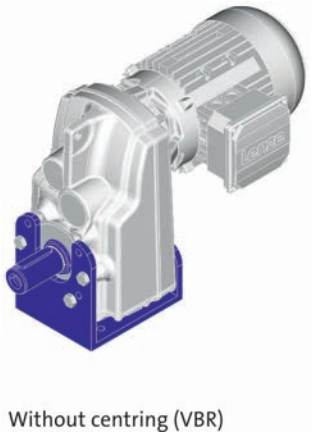 Without centring (VBR)

The geared motor kit

g500-S950 ... S4500

Product				
Gearbox	g500-S950	g500-S2100	g500-S3100	g500-S4500
Motor assignment min.	MD□MA□□-063	MD□MA□□-063	MD□MA□□-063	MD□MA□□-071
Motor assignment max.	m550-P132	m550-P180	m550-P180	m550-P180
Technical data				
Output torque max.	950 Nm	2100 Nm	3100 Nm	4500 Nm
Drive power min.	0.12 kW	0.25 kW	0.25 kW	0.55 kW
Drive power max.	7.5 kW	30 kW	30 kW	30 kW
Dimensions [mm]				
Solid shaft with featherkey	40 x 80	50 x 100	60 x 120	70 x 140 80 x 160 [1)]
Hollow shaft with keyway	40	50/55	60/70	70/80
Hollow shaft with shrink disc	40	50	65	75/80
Output flange	250	250/300	350	400/450

[1)] Only steel shaft material is available.

- ► The designs are only available for the gearboxes displayed above in the table.
- ► Values printed in bold are standard versions.
  Values not printed in bold are possible extensions, some for an additional charge.

Design	
Conformity	**CE** EAC
Approval	**Without** CCC/cURus
Degree of protection	**IP55** IP65/IP66
Surface and corrosion protection	**OKS-S** Different types of OKS
Colour	**Painted in RAL colours** Primed
Hollow shaft	**With keyway (H□□)**
Hollow shaft with shrink disc	Without keyway (S□□)
Solid shaft	With featherkey (V□□)
Shaft material	**Steel** stainless steel
Shaft sealing ring material	**NBR** FKM (Viton)
Driven shaft bearing	**Normal**
Paste for shaft mounting	**Without** Enclosed
Gearbox type	**With foot (□BR)** With foot and centering (□AR) With foot and output flange (□AK)
Lubricant	**Mineral oil** Synthetic oil Food-compatible oil

Design	
Mounting position	**A/B/C/D/E/F**
Power connection	**Terminal box** Plug connectors
Spring-applied brake	**Without** Brake design: Standard/Longlife Brake version: Standard/Overexcited/Cold Brake
Feedback	**Without** Resolver Absolute value encoder Incremental encoder
Cooling	**Integral fan** Blower
Temperature monitoring	**TKO thermal contact** PTC thermistor KTY thermal detector

The geared motor kit

g500-S950 ... S4500

Gearbox design: hollow shaft, with foot

Gearbox design: hollow shaft with shrink disc, with foot

The geared motor kit

g500-S950 ... S4500

Gearbox design: solid shaft, with foot
Without centring (VBR) With centering (VAR) Flange with through holes (VAK)

The geared motor kit

g500-S8000 ... S19000

Product			
Gearbox	g500-S8000	g500-S14000	g500-S19000
Motor assignment min.	m540-P100	m540-P112	m540-P112
Motor assignment max.	m540-P250	m540-P250	m540-P250
Technical data			
Output torque max.	8000 Nm	14000 Nm	19000 Nm
Drive power min.	2.2 kW	4.0 kW	4.0 kW
Drive power max.	55 kW	55 kW	55 kW
Dimensions [mm]			
Solid shaft with featherkey	90 x 170	110 x 210	120 x 210
Hollow shaft with keyway	90	100	120
Hollow shaft with shrink disc	95	105	125
Output flange	450	550	660

- ► The designs are only available for the gearboxes displayed above in the table.
- ► Values printed in bold are standard versions.
  Values not printed in bold are possible extensions, some for an additional charge.

Design	
Conformity	**CE** EAC
Approval	**Without** CSA/cURus
Degree of protection	**IP55** IP65/IP66
Surface and corrosion protection	**OKS-S** Different types of OKS
Colour	**Painted in RAL colours** Primed
Hollow shaft	**With keyway (H□□)**
Hollow shaft with shrink disc	Without keyway (S□□)
Solid shaft	With featherkey (V□□)
Shaft material	**Steel**
Shaft sealing ring material	**NBR**
Driven shaft bearing	**Normal**
Paste for shaft mounting	**Without**
Gearbox type	**With foot (□BR)** With foot and centering (□AR) With foot and output flange (□AK)
Lubricant	**Mineral oil** Synthetic oil Food-compatible oil

Design	
Mounting position	**A/B/C/D/E/F**
Power connection	**Terminal box** Plug connectors
Spring-applied brake	**Without** Brake design: Standard brake version: Standard
Feedback	**Without** Incremental encoder
Cooling	**Integral fan** Blower
Temperature monitoring	**PTC thermistor**

The geared motor kit

g500-S8000 ... S19000

Gearbox design: hollow shaft, with foot		
Without centring (HBR)	With centering (HAR)	Flange with through holes (HAK)

Gearbox design: hollow shaft with shrink disc, with foot		
Without centring (SBR)	With centering (SAR)	Flange with through holes (SAK)

6.4

The geared motor kit

g500-S8000 ... S19000

Gearbox design: solid shaft, with foot
Without centring (VBR) With centering (VAR) Flange with through holes (VAK)

General information about the data provided in this catalogue

The powers, torques and speeds specified in this catalogue are rounded values and are valid under the following conditions:

- Operating time/day = 8 h (100% OT)
- Duty class I for up to 10 switching operations/h
- Mounting positions and designs in this catalogue
- Standard lubricant
- T_{amb} = 20 °C for gearboxes,
  T_{amb} = 40 °C for motors (in accordance with EN 60034)
- Site altitude ≤ 1000 m amsl
- The selection tables provide the permissible mechanical powers and torques. For notes on the thermal power limit, see chapter drive dimensioning.
- The rated power specified for motors and geared motors applies to operating mode S1 (in accordance with EN 60034).

Under different operating conditions, the values obtained may vary from those listed here.
In the case of extreme operating conditions, please consult your Lenze sales office.

Procedure of a configuration process

Workflow

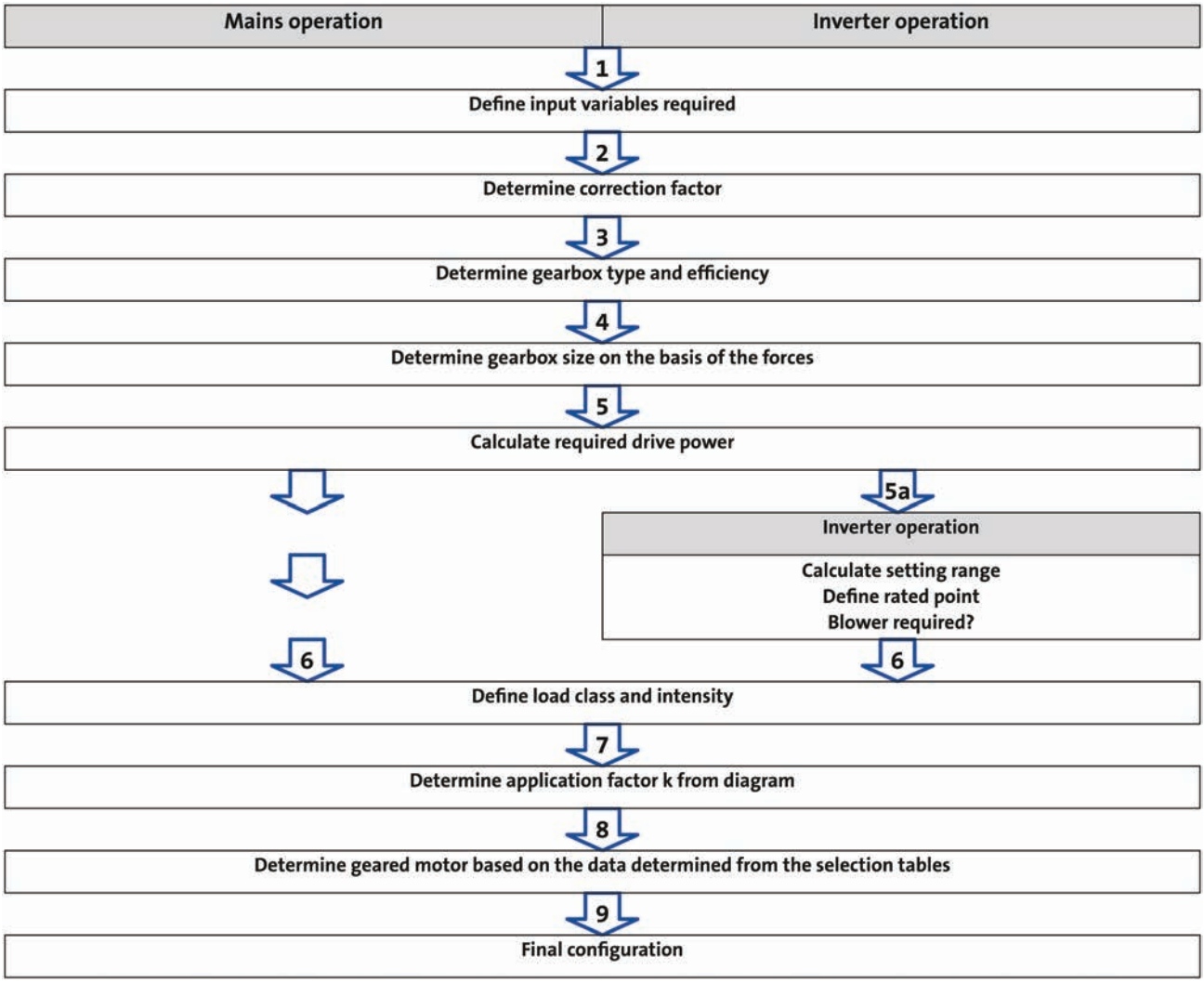

You can use our configuring software Drive Solution Designer for precise drive dimensioning.

The Drive Solution Designer helps you to carry out a fast and high-quality drive dimensioning.
The software includes well-founded and proven knowledge on drive applications and electro-mechanical drive components.

Please contact your Lenze sales office.

Procedure of a configuration process

1 required input variables

Load torque		$M_{L,max}$=	[Nm]
	In inverter operation	$M_{L,min}$=	[Nm]
Load speed		$n_{L,max}$=	[r/min]
	In inverter operation	$n_{L,min}$=	[r/min]
External moments of inertia		J_{ext}=	[$kgcm^2$]
Operating time / day		BD =	[h]
Switching operations per h		S_h=	[1/h]
Runtime for $M_{L,max}$	In inverter operation		[%]

2 determine correction factor

Operating modes and operating time						
S1	ED	[%]	100			
	k_L =		1.0			
S2	ED	[%]	10	30	60	90
	k_L =		1.4 - 1.5	1.15 - 1.2	1.07 - 1.1	1.0 - 1.05
S3	ED	[%]	15	25	40	60
	k_L =		1.4 - 1.5	1.3 - 1.4	1.15 - 1.2	1.05 - 1.1
S6	ED	[%]	15	25	40	60
	k_L =		1.5 - 1.6	1.4 - 1.5	1.3 - 1.4	1.15 - 1.2
Site altitude						
	H	[m]	≤ 1000	≤ 2000	≤ 3000	≤ 4000
	k_H =		1	0.95	0.9	0.85
Ambient temperature						
	T_U =	[°C]	≤ 40	≤ 45	≤ 50	≤ 55
	k_{TU} =		1	0.95	0.9	0.8

30 - Operating modes

Procedure of a configuration process

3 determine gearbox type and efficiency

Gearbox type			Axial gearboxes		Right-angle gearboxes
			Helical gearbox	Shaft-mounted	Bevel gearbox
Product			g500-H	g500-S	g500-B
Gearbox efficiency	2-stage gearboxes	η_G	0.96	0.96	0.96
	3-stage gearboxes	η_G	0.95	0.95	0.95

4 determine gearbox size based on the forces on the output

Transmission element		Gear wheels	Sprockets	Toothed belt pulleys (depending on the initial stress)	Narrow V-belt (depending on the initial stress)
Additional radial force factor	f_z =	≥ 17 teeth = 1.0 < 17 teeth = 1.15	≥ 20 teeth = 1.0 < 20 teeth = 1.25 < 13 teeth = 1.4	With belt tightener = 2.0 - 2.5 Without belt tightener = 2.5 - 3.0	1.5 - 2.0
		Calculation		**Check**	
Radial force	[N]	$F_{rad} = 2000 \times \frac{M_{L,max} \times f_z}{dw}$		$F_{rad} \leq f_w \times F_{rad,max}$	
Axial force	[N]			$F_{ax} \leq F_{rad,max} \times 0.5$	

d_w= effective diameter [mm] transmission element
f_w= additional load factor

► For permissible radial and axial forces and additional load factor see the "Technical data" chapter

5 calculate drive power

		Calculation	
Drive power required	[kW]	$P_1 = \frac{M_{L,max} \times n_{L,max}}{9549 \times k_L \times k_H \times k_{Tu} \times \eta_g}$	

k_L= Correction factor - operating mode
k_H= correction factor - installation height
k_{TU}= correction factor - ambient temperature

Procedure of a configuration process - mains operation

6 calculate intensity and determine duty class

Load class	Load type	Intensity
I	Smooth operation, small or light jolts	$F_I \leq 1.25$
II	Uneven operation, average jolts	$1.25 < F_I \leq 4$
III	Uneven operation, severe jolts and/or **alternating load**	$F_I > 4$

31 - Duty classes

	Calculation	
Intensity	$F_I = \frac{\frac{J_L}{i^2} + J_M + J_B + J_Z}{J_M + J_B + J_Z}$	

i= gearbox ratio
J_L= moment of inertia of the load
J_M= moment of inertia of the motor
J_B= moment of inertia of the brake
J_Z= additional moment of inertia (handwheel, 2nd shaft end ...)

7 determine application factor k from diagram

34 - Load capacity and application factor

Procedure of a configuration process - mains operation

8 determine geared motor based on the data determined from the selection tables

Selection table		Check
Drive power P_N	[kW]	$P_1 \leq P_N$
Output speed n_2	[r/min]	$n_{L,max} \approx n_2$
Output torque M_2	[Nm]	$M_{L,max} \leq M_2$
Load factor c		$k \leq c$
Order information		**Example**
Number of stages		2
Ratio i		3.267
Product gearbox		g500-H140
Product motor		m550-P80/M4

34 - Load capacity and application factor

Example: structure of a selection table

50 Hz: P_N = 0.75 kW ← Rated power P_N

2-stage gearboxes ← Number of the gear stage

Mains operation 400 V, 50 Hz			Inverter operation 5 Hz -		- 20 Hz		- 50 Hz (1:10)			- 87 Hz (1:17.4)			i	Product		
n_2 [r/min]	M_2 [Nm]	c	n_{22} [r/min]	M_{22} [Nm]	n_{21} [r/min]	M_2 [Nm]	n_2 [r/min]	M_2 [Nm]	c	n_2 [r/min]	M_2 [Nm]	c		g500	m5□□	
444	16	4.3	44	12	184	16	444	16	4.3	784	16	3.5	3.267	-H140	50-P80/M4	
432	16	3.9	43	12	179	16	432	16	3.9	763	16	3.2	3.354	-H100	50-P80/M4	

Output speed n_2 ↑ Output torque M_2 ↑ Load capacity **c** ↑

Ratio i ↑ Product Gearbox ↑ Product Motor ↑

Procedure of a configuration process - inverter operation

5a calculate range of adjustment and determine rated point

		Calculation	
Setting range		$V = \frac{n_{L,max}}{n_{L,min}}$	
Setting range	Motor with integral fan	≤ 2.5 (20 ... 50 Hz)	≤ 4.35 (20 ... 87 Hz)
	Motor with blower	≤ 10 (5 ... 50 Hz)	≤ 17.4 (5 ... 87 Hz)
Rated point at		50 Hz	87 Hz

6 calculate intensity and determine duty class

	Calculation		
Intensity	$M_I = \frac{M_{L,max}}{M_{L,min}}$	**For alternating load, select load class III!**	
Load class	Load type		Intensity
I	Smooth operation, small or light jolts		$M_I \leq 1.5$
II	Uneven operation, average jolts		$1.5 < M_I \leq 2$
III	Uneven operation, severe jolts and/or alternating load		$2 < M_I \leq 2.5$

31 - Duty classes

7 determine application factor k from diagram

34 - Load capacity and application factor

Procedure of a configuration process - inverter operation

8 determine geared motor based on the data determined from the selection tables

Selection table			Check	
Drive power P_N		[kW]	$P_1 \leq P_N$	
Max. output speed n_2		[r/min]	$n_{L,max} \approx n_2$	
Min. output speed n_{21}	Self-ventilated	[r/min]	$n_{L,min} \approx n_{21}$	Setting range 2.5 (50 Hz) Setting range ≤ 4.35 (87 Hz)
Min. output speed n_{22}	Forced-ventilated	[r/min]	$n_{L,min} \approx n_{22}$	Setting range ≤ 10 (50 Hz) Setting range ≤ 17.4 (87 Hz)
	Self-ventilated (Reduced output torque)	[r/min]	$n_{L,min} \approx n_{22}$	
Output torque M_2		[Nm]	$M_{L,max} \leq M_2$	
Load factor c			$k \leq c$	
Order information			**Example**	
Number of stages			2	
Ratio i			3.267	
Product gearbox			g500-H140	
Product motor			m550-P80/M4	

34 - Load capacity and application factor
37 - Torque derating at low motor frequencies

Example: structure of a selection table

50 Hz: P_N = 0.75 kW
87 Hz: P_N = 1.35 kW ← Rated power P_N

2-stage gearboxes ← Number of the gear stage

Mains operation 400 V, 50 Hz			Inverter operation 5 Hz -		- 20 Hz		- 50 Hz (1:10)			- 87 Hz (1:17.4)			i	Product		
n_2 [r/min]	M_2 [Nm]	c	n_{22} [r/min]	M_{22} [Nm]	n_{21} [r/min]	M_2 [Nm]	n_2 [r/min]	M_2 [Nm]	c	n_2 [r/min]	M_2 [Nm]	c		g500	m550	
444	16	4.3	44	12	184	16	444	16	4.3	784	16	3.5	3.267	-H140	-P80/M4	
432	16	3.9	43	12	179	16	432	16	3.9	763	16	3.2	3.354	-H100	-P80/M4	

Min. Output speed n_{22}
Min. Output torque M_2
Min. Output speed n_{21}
Max. Output speed n_2
Max. Output torque M_2
Load capacity c
Ratio i
Product Gearbox
Product Motor

Procedure of a configuration process

9 Final configuration

More information regarding the final configuration can be found under: **- The modular geared motor system** **- Product extensions for gearboxes, motors**	
Check operating conditions	- Operating temperature (observe lubricant, material of shaft sealing ring) - Degree of protection - Supply voltage - Surface protection required - Approvals - Conformity
Check and define connection dimensions	- Driven shaft - Foot, output flange, centering with threaded pitch circle
Determine mounting position and position of the system blocks	- Mounting position A/B/C/D/E/F or combined - Terminal box position, shaft position, flange position
Select product extensions at the gearbox (differing depending on the gearbox type)	- Torque plate at the base, threaded pitch circle, rubber buffer - Hollow shaft cover, shrink disc cover
Select product extensions at the motor	- Connection type (terminal box, connector) - Brake - Blower (inverter operation) - Feedback - Temperature monitoring

Standards

Operating modes

Operating modes S1 ... S10 as specified by EN 60034-1 describe the basic stress of an electrical machine.

In continuous operation a motor reaches its permissible temperature limit if it outputs the rated power dimensioned for continuous operation. However, if the motor is only subjected to load for a short time, the power output by the motor may be greater without the motor reaching its permissible temperature limit. This behaviour is referred to as overload capacity.
Depending on the duration of the load and the resulting temperature rise, the required motor can be selected reduced by the overload capacity.

The most important operating modes

Continuous operation S1	Short-time operation S2
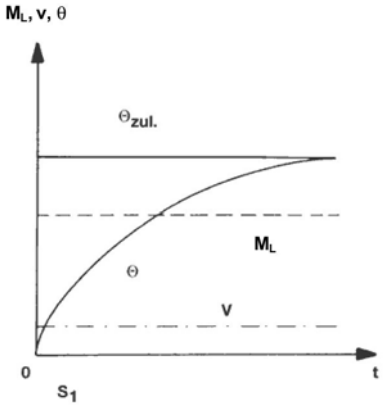	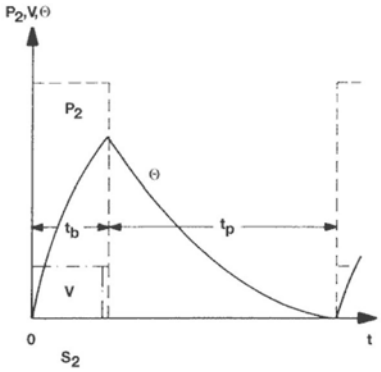
Operation with a constant load until the motor reaches the thermal steady state. The motor may be actuated continuously with its rated power.	Operation with constant load; however, the motor does not reach the thermal steady state. During the following standstill, the motor winding cools down to the ambient temperature again. The increase in power depends on the load duration.

Intermittent operation S3	Non-intermittent periodic operation S6
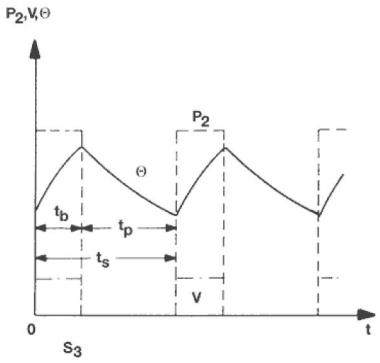	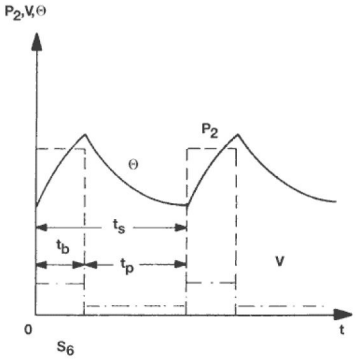
-	-

Standards

Duty classes

Depending on the load type, the duty classes or impacts are divided as follows:

Duty class	Load type
I	Smooth operation, small or light jolts
II	Uneven operation, average jolts
III	Uneven operation, severe jolts and/or alternating load

In order to support you in classifying your driven machine regarding the right duty class, the following shows sample applications with the corresponding duty class. Depending on, for instance, the operating frequency, driven machines can also have a higher impact.
In case of uncertainties, please contact your Lenze sales office.

Drive	Duty class
Construction machines	II
Chemical industry	II
Conveyors	II
Fans	II
Plastics industry	II
Wood working	III
Hoists	III
Metal working	III
Food	II
Paper industry	III
Stones	III
Textile industry	II

Standards

Degrees of protection

The degree of protection indicates the suitability of a motor for specific ambient conditions with regard to humidity as well as the protection against contact and the ingress of foreign particles. The degrees of protectionare classified by EN 60529.

The first code number after the code letters IP indicates the protection against the ingress of foreign particles and dust.
The second code number refers to the protection against the ingress of humidity.

Code number 1	Degree of protection	Code number 2	Degree of protection
0	No protection	0	No protection
1	Protection against the ingress of foreign particles d > 50 mm. No protection in the case of deliberate access	1	Protection against vertically dripping water (dripping water).
2	Protection against medium-sized foreign particles, d > 12 mm, keeping away fingers or similar	2	Protection against diagonally falling water (dripping water), 15 ° compared to normal service position.
3	Protection against small foreign particles d > 2.5 mm. Keeping away tools, wires and the like	3	Protection against spraying water, up to 60 ° to the vertical
4	Protection against granular foreign particles, d > 1 mm, keeping away tools, wires and the like	4	Protection against spraying water from all directions.
5	Protection against dust deposits (dust-protected), complete protection against contact.	5	Protection against water jets from all directions.
6	Protection against the ingress of dust (dust-proof), complete protection against contact.	6	Protection against choppy seas or heavy water jets (flood protection).

Thermal power limit

The thermal power limit, defined by the heat balance, limits the permissible permanent gearbox power.
It is affected by:
- the churning losses in the lubricant. These are determined by the mounting position and the circumferential speed of the gears;
- the load and the speed;
- the ambient conditions: temperature, air circulation, input or dissipation of heat via shafts and the foundations.

We ask you to make a thermal check with the Drive Solution Designer (DSD) or contact the Lenze office responsible for you

- if the input speed n1 > 1500 r/min is exceeded in case of the gearbox ratios given in the following (can be e.g. recognised by the empty cells in the selection tables):

g500 thermal power limit	
Product	Ratio i
g500-H850 ... H3000	≤ 10
g500-S2100 ... S4500	≤ 16
g500-B1500 ... B4300	≤ 25

g500 thermal power limit	
Product	Ratio i
g500-H5000 ... H14000	≤ 25
g500-S8000 ... S19000	≤ 40
g500-B8000 ... B20000	≤ 60

- If the drive speeds mentioned in the following will be exceeded as a function of the mounting position:

g500 thermal power limit			
Product	Mounting position A	Mounting position A, B, E, F	Mounting position C, D
MD□MA□□063 ... 100 MH□MA□□063 ... 100	4000 r/min	3500 rpm	3000 r/min
MD□MA□□112 ... 132 MH□MA□□112 ... 132 m240-P112 ... P132 m550-P112 ... P132	3000 r/min	2600 rpm	1500 r/min
MD□MA□□160 ... 180 MH□MA□□160 ... 180 m240-P160 ... P180 m550-P160 ... P180	2000 r/min	1800 rpm	1500 r/min
m540-P90 ... P250	1500 r/min	1500 r/min	1500 r/min

► For a short period of time up to 5 min, 30 % higher speeds are permissible

Possible ways of extending the application area

- Synthetic lubricant (option)
- Shaft sealing rings made from FKM material/Viton (option)
- Reduction in lubricant quantity (after consultation with Lenze)
- Cooling of the geared motor by means of air convection on the machine/system

Load capacity and application factor

Load capacity c of gearboxes
Rated value for the load capacity of Lenze geared motors.
- c is the ratio of the permissible rated torque of the gearbox to the rated torque supplied by the drive component (e.g. the built-in Lenze motor).
- The value of c must always be greater than the value of the application factor k calculated for the application.

Required: c ≥ k

Application factor k (according to DIN 3990)
Takes into account the influence of temporally variable loads which are actually present during the anticipated operating time of gearboxes and geared motors.
k is determined by:
- the type of load
- the load intensity
- temporal influences

Application factor k

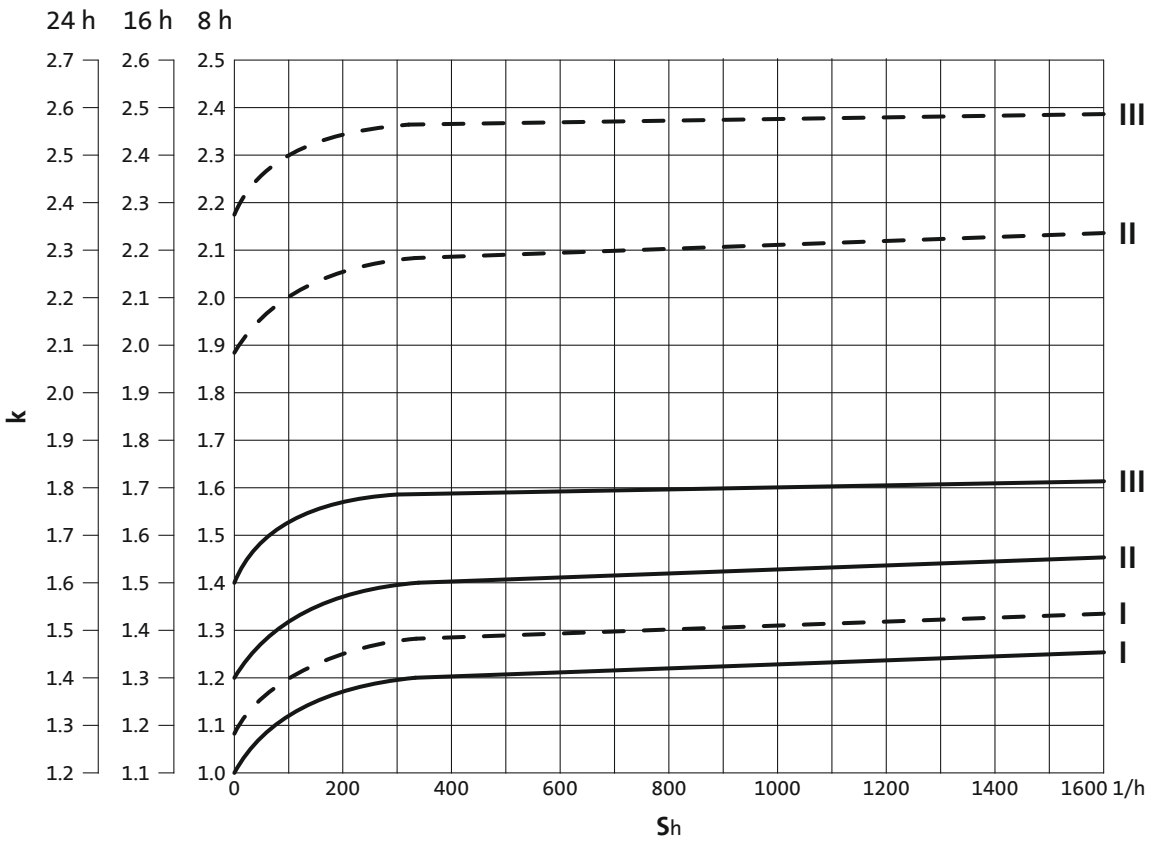

► S_h= switchings/h
► ——— Three-phase AC motors MD□MA
— — — Three-phase AC motors m240/m540/m550

Operational performance of three-phase AC geared motors

The g500 geared motors can be actuated directly on the mains or via an inverter. When actuated in mains operation, the motor runs at a fixed speed, for inverter operation the speed is variable. Thanks to their high degree of protection, the robust three-phase drives can be basically used in a variety of applications.

Mains operation

During mains operation, when switched on, the three-phase AC motor starts up according to the speed-torque characteristic. It passes through this characteristic until it reaches its stable operating point. This operating point has been reached if the load torque or rated torque (M_{rated}) is lower than the starting torque (M_A) and pull-up torque (M_S). The rated speed (n_{rated}) of the drive is always lower than the calculated synchronous speed (n_S). The difference between rated speed and synchronous speed relating to the synchronous speed is referred to as the "slip".

Speed-torque characteristic

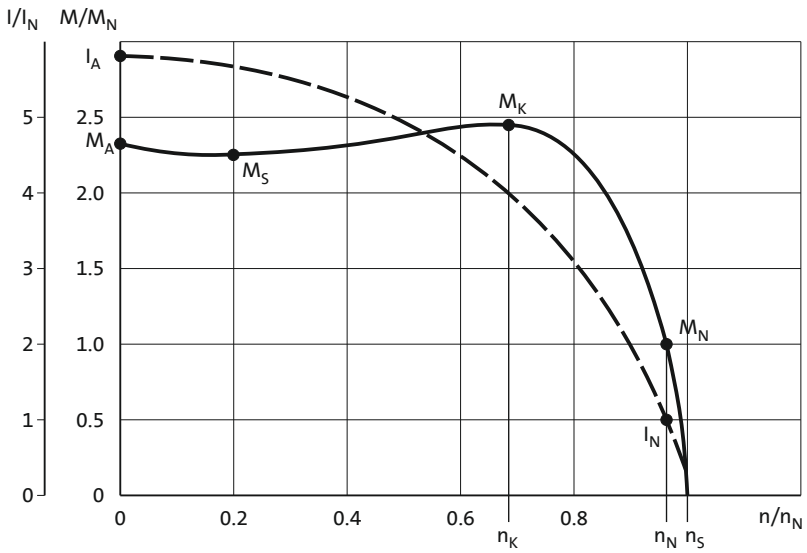

Operational performance of three-phase AC geared motors

Operation on the inverter

An inverter enables energy-efficient operation of a system in virtually all application cases. The various operating modes, which can be created by making just a few simple settings, facilitate this. The following characteristics and corresponding specifications listed on the following pages can be used to calculate the optimum operating mode during the project planning phase.

Standard setting

In its initial state when delivered, the inverter is set up for basic operation with a three-phase AC motor with vector control. When operated in this mode, the rated torque of the motor is available in a setting range up to 50 Hz.

V/f at 50 Hz

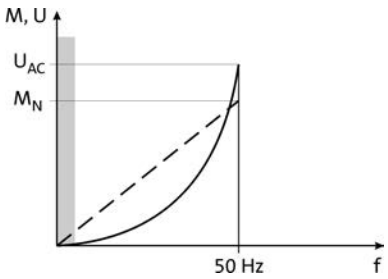

Extended setting range up to 87 Hz

If the V/f reference point on the inverter is set to 87 Hz, the rated torque can be used across an extended setting range. Here, a 230/400V motor is for example used and operated in a delta layout with a 400V inverter. The setting range is then increased by 40 %. The inverter must be dimensioned for a rated motor current of 230 V.

V/f at 87 Hz

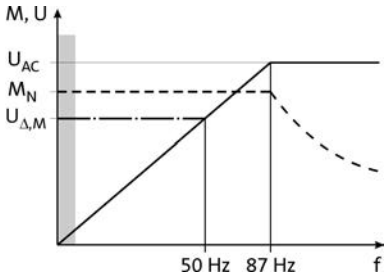

Operational performance of three-phase AC geared motors

Torque derating at low motor frequencies

The diagram shows the motor frame size-dependent torque reduction for self-ventilated motors, taking the thermal behaviour during actuation of the inverter into consideration.

Torque characteristics

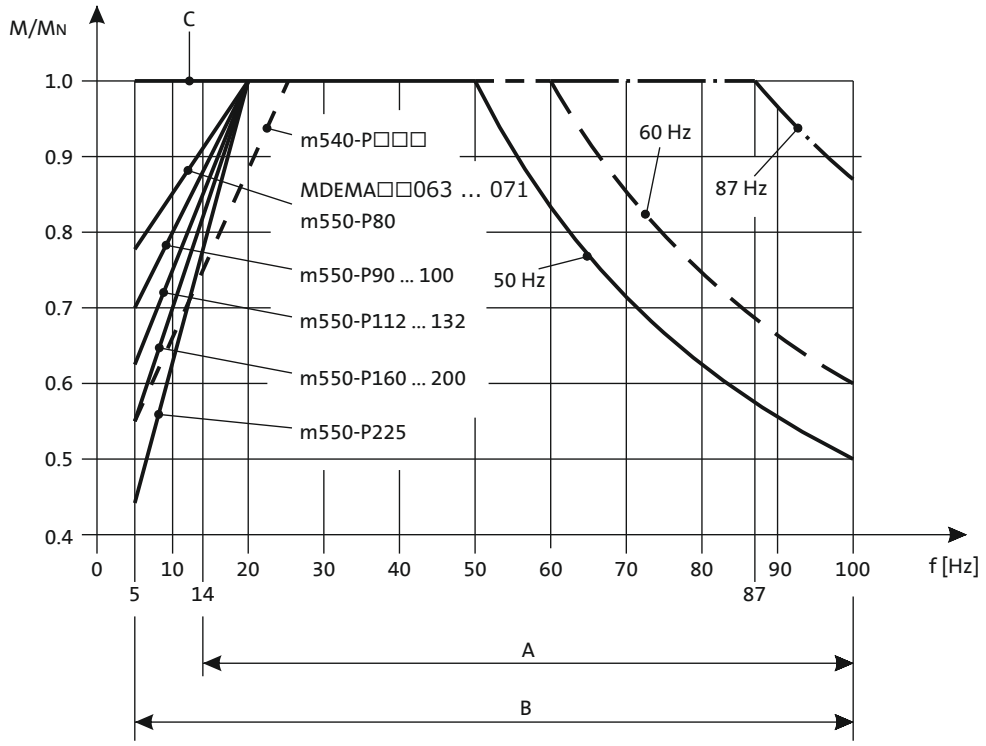

A = Operation with integral fan and brake
B = Operation with integral fan and brake control "Holding current reduction"
C= operation with blower

Technical data at a glance

The following tables contain the most important data of the gearbox with the motors that can be attached for an approximate dimensioning process of a geared motor. Detailed information can be found in the following chapters.

The data given in the tables apply to
- input speed n_1= 1400 r/min
- application factor c= 1.0

The data for the max. radial force refer to
- solid shaft without flange
- normal storage
- application factor c= 1.3

For further designs see the "Technical data" chapter.

► The rated torque can be gathered from the last digits of the product name e.g. g500-S130 (130 Nm).

In order to calculate the exact ratio, the number of teeth z_g (driven) can be divided by the number of teeth z_t (driving). These are rounded values.

g500-S130, 2-stage gearboxes

Output speed	Max. output torque	Max. drive power	Ratio	Number of teeth		Max. radial force	Backlash	Rated power	
							Standard	Motor	
n_2	$M_{2, max}$	$P_{1, max}$	i	z_g	z_t	$F_{rad,max}$		$P_{N, min}$	$P_{N, max}$
							± 20 %		
[r/min]	[Nm]	[kW]				[N]	[arcmin]	[kW]	[kW]
394	63	2.68	3.661	174	637	1350	20	0.25	1.50
287	76	2.36	5.021	145	728	1420	19	0.25	1.50
205	92	2.04	7.029	725	5096	1530	18	0.18	1.50
173	116	2.17	8.322	90	749	1600	13	0.25	1.50
153	125	2.07	9.411	90	847	1660	13	0.25	1.50
224	87	2.11	6.425	87	559	1500	18	0.25	1.50
126	130	1.77	11.413	75	856	1990	13	0.25	1.50
112	130	1.57	12.907	75	968	2100	12	0.25	1.50
99.0	130	1.38	14.606	315	4601	2220	13	0.25	1.50
90.0	130	1.27	15.979	375	5992	2320	13	0.18	1.50
80.0	130	1.12	18.069	375	6776	2460	12	0.18	1.10
71.0	130	0.99	20.381	21	428	2610	13	0.18	1.10
63.0	130	0.88	23.048	21	484	2780	12	0.18	0.75
58.0	130	0.82	24.967	30	749	2890	13	0.25	0.75
51.0	130	0.72	28.233	30	847	3070	12	0.25	0.75
46.0	130	0.65	31.387	75	2354	3240	13	0.12	0.75
40.0	130	0.56	35.493	75	2662	3440	12	0.12	0.55
35.0	130	0.49	40.422	45	1819	3660	13	0.12	0.55
31.0	130	0.43	45.711	45	2057	3860	12	0.12	0.37
28.0	130	0.39	51.230	165	8453	4040	12	0.12	0.37
24.0	130	0.34	57.933	15	869	4230	12	0.12	0.37
22.0	130	0.31	64.200	5	321	4360	12	0.12	0.37
19.0	130	0.27	72.600	5	363	4500	12	0.12	0.25
16.0	102	0.18	84.581	105	8881	4500	12	0.12	0.18
14.0	115	0.18	95.648	105	10043	4500	12	0.12	0.18

Technical data at a glance

g500-S220, 2-stage gearboxes

Output speed	Max. output torque	Max. drive power	Ratio	Number of teeth		Max. radial force	Backlash	Rated power	
							Standard	Motor	
n_2	$M_{2, max}$	$P_{1, max}$	i	z_g	z_t	$F_{rad,max}$		$P_{N, min}$	$P_{N, max}$
							± 20 %		
[r/min]	[Nm]	[kW]				[N]	[arcmin]	[kW]	[kW]
377	178	7.25	3.840	144	553	2360	16	0.55	3.00
275	181	5.37	5.267	15	79	2650	16	1.10	3.00
214	220	5.08	6.767	30	203	2900	13	0.55	3.00
189	217	4.43	7.667	3	23	3050	12	0.55	3.00
156	220	3.71	9.280	25	232	3250	13	1.10	3.00
138	220	3.27	10.514	35	368	3400	12	1.10	3.00
122	220	2.90	11.876	105	1247	3500	13	0.55	3.00
112	220	2.65	12.992	125	1624	3550	13	0.25	3.00
108	220	2.56	13.456	147	1978	3600	12	0.55	3.00
99.0	220	2.34	14.720	25	368	3600	12	0.25	2.20
88.0	220	2.08	16.571	7	116	3600	12	0.25	2.20
77.0	220	1.84	18.776	49	920	3600	12	0.25	2.20
71.0	220	1.69	20.300	10	203	3600	12	0.55	1.50
63.0	220	1.49	23.000	1	23	3600	12	0.55	1.50
55.0	220	1.30	26.422	45	1189	3600	12	0.25	1.50
48.0	220	1.14	29.937	63	1886	3600	12	0.25	1.10
44.0	220	1.04	32.867	15	493	3600	12	0.25	1.10
39.0	220	0.92	37.238	21	782	3600	12	0.25	1.10
34.0	220	0.81	42.533	15	638	3600	12	0.12	0.75
30.0	220	0.71	48.190	21	1012	3600	12	0.12	0.75
27.0	220	0.65	51.620	50	2581	3600	12	0.12	0.55
24.0	220	0.57	58.486	35	2047	3600	11	0.12	0.55
21.0	171	0.39	65.975	40	2639	3600	12	0.12	0.37
19.0	194	0.40	74.750	4	299	3600	11	0.12	0.37

Technical data at a glance

g500-S220, 3-stage gearboxes

Output speed	Max. output torque	Max. drive power	Ratio	Number of teeth		Max. radial force	Backlash	Rated power	
							Standard	Motor	
n_2	$M_{2, max}$	$P_{1, max}$	i	z_g	z_t	$F_{rad,max}$		$P_{N, min}$	$P_{N, max}$
							± 20 %		
[r/min]	[Nm]	[kW]				[N]	[arcmin]	[kW]	[kW]
35.0	220	0.85	40.012	345	13804	3600	13	0.18	0.37
31.0	220	0.75	45.333	3	136	3600	12	0.18	0.37
28.0	220	0.67	52.587	75	3944	3600	13	0.12	0.75
24.0	220	0.57	59.581	105	6256	3600	12	0.12	0.55
21.0	220	0.50	67.298	315	21199	3600	13	0.12	0.55
18.0	220	0.44	76.249	441	33626	3600	12	0.12	0.55
16.0	220	0.40	86.079	63	5423	3600	13	0.12	0.37
14.0	220	0.35	97.528	441	43010	3600	12	0.12	0.37
13.0	220	0.30	111.747	75	8381	3600	13	0.12	0.37
11.0	220	0.26	126.610	105	13294	3600	12	0.12	0.25
10.0	220	0.23	143.205	210	30073	3600	13	0.12	0.25
8.00	220	0.20	162.252	147	23851	3600	12	0.12	0.25
6.00	220	0.14	241.022	45	10846	3600	13	0.12	0.12
5.00	220	0.13	273.079	63	17204	3600	12	0.12	0.12
5.00	220	0.11	312.233	30	9367	3600	13	0.12	0.12
4.00	220	0.10	353.762	21	7429	3600	12	0.12	0.12

Technical data at a glance

g500-S400, 2-stage gearboxes

Output speed	Max. output torque	Max. drive power	Ratio	Number of teeth		Max. radial force	Backlash	Rated power	
							Standard	Motor	
n_2	$M_{2, max}$	$P_{1, max}$	i	z_g	z_t	$F_{rad,max}$		$P_{N, min}$	$P_{N, max}$
							± 20 %		
[r/min]	[Nm]	[kW]				[N]	[arcmin]	[kW]	[kW]
435	203	9.54	3.339	174	581	2360	16	0.55	4.00
317	243	8.33	4.579	145	664	2560	16	1.10	4.00
248	258	6.89	5.860	609	3569	2750	13	0.55	4.00
227	261	6.39	6.411	725	4648	2820	12	0.25	4.00
195	365	7.66	7.467	15	112	2980	13	0.55	4.00
172	380	7.06	8.436	39	329	3150	12	0.55	4.00
142	400	6.13	10.240	25	256	3450	13	1.10	4.00
126	400	5.42	11.569	65	752	3650	13	1.10	4.00
111	400	4.79	13.105	105	1376	3900	12	0.55	4.00
101	400	4.38	14.336	125	1792	4000	12	0.25	4.00
98.0	400	4.24	14.806	273	4042	4100	12	0.55	4.00
90.0	400	3.87	16.197	325	5264	4200	12	0.25	4.00
80.0	400	3.43	18.286	7	128	4400	12	0.25	4.00
70.0	400	3.03	20.659	91	1880	4650	12	0.25	3.00
65.0	400	2.79	22.400	5	112	4800	12	0.55	3.00
57.0	400	2.47	25.308	13	329	5100	12	0.55	3.00
50.0	400	2.14	29.156	45	1312	5500	12	0.25	1.50
44.0	400	1.89	32.940	117	3854	5750	12	0.25	1.50
40.0	400	1.72	36.267	15	544	5850	12	0.25	1.50
35.0	400	1.52	40.974	39	1598	5980	12	0.25	1.50
31.0	314	1.05	46.933	15	704	6100	12	0.12	0.75
27.0	348	1.03	53.026	39	2068	6200	11	0.12	0.75
25.0	268	0.71	56.960	25	1424	6200	12	0.12	0.55
22.0	303	0.71	64.354	65	4183	6200	11	0.12	0.55

Technical data at a glance

g500-S400, 3-stage gearboxes

Output speed	Max. output torque	Max. drive power	Ratio	Number of teeth		Max. radial force	Backlash	Rated power	
							Standard	Motor	
n_2	$M_{2, max}$	$P_{1, max}$	i	z_g	z_t	$F_{rad,max}$		$P_{N, min}$	$P_{N, max}$
							± 20 %		
[r/min]	[Nm]	[kW]				[N]	[arcmin]	[kW]	[kW]
25.0	400	1.09	58.027	75	4352	6200	11	0.18	0.75
22.0	400	0.97	65.559	195	12784	6200	11	0.18	0.75
20.0	400	0.85	74.260	315	23392	6200	11	0.18	0.75
17.0	400	0.76	83.900	819	68714	6200	11	0.18	0.75
15.0	400	0.67	94.984	63	5984	6200	11	0.12	0.75
13.0	399	0.57	107.314	819	87890	6200	11	0.12	0.55
11.0	400	0.50	123.307	75	9248	6200	11	0.12	0.55
10.0	399	0.44	139.313	195	27166	6200	11	0.12	0.55
9.00	400	0.39	158.019	105	16592	6200	11	0.12	0.37
8.00	400	0.35	178.531	273	48739	6200	11	0.12	0.37
7.00	400	0.30	204.412	165	33728	6200	11	0.12	0.37
6.00	396	0.26	230.946	429	99076	6200	11	0.12	0.25
5.00	388	0.22	265.956	45	11968	6200	11	0.12	0.25
4.00	400	0.20	300.479	117	35156	6200	11	0.12	0.18
4.00	330	0.15	344.533	15	5168	6200	11	0.12	0.12
4.00	373	0.15	389.256	39	15181	6200	11	0.12	0.12

Technical data at a glance

g500-S660, 2-stage gearboxes

Output speed	Max. output torque	Max. drive power	Ratio	Number of teeth		Max. radial force	Backlash	Rated power	
							Standard	Motor	
n_2	$M_{2, max}$	$P_{1, max}$	i	z_g	z_t	$F_{rad,max}$		$P_{N, min}$	$P_{N, max}$
							± 20 %		
[r/min]	[Nm]	[kW]				[N]	[arcmin]	[kW]	[kW]
377	419	17.0	3.920	25	98	3320	14	2.20	7.50
275	492	14.6	5.376	125	672	3580	13	2.20	7.50
230	601	14.9	6.417	12	77	3660	11	2.20	7.50
215	496	11.5	6.880	25	172	3690	13	1.10	7.50
202	593	12.9	7.311	45	329	3720	11	2.20	7.50
168	638	11.6	8.800	5	44	3900	11	2.20	7.50
147	625	9.94	10.027	75	752	4200	10	2.20	7.50
131	660	9.35	11.262	42	473	4500	11	1.10	7.50
120	660	8.54	12.320	25	308	4750	10	1.10	7.50
115	660	8.20	12.832	315	4042	4850	10	1.10	7.50
105	660	7.49	14.037	375	5264	5100	10	1.10	7.50
94.0	660	6.70	15.714	7	110	5450	10	0.55	7.50
82.0	660	5.81	17.905	21	376	5800	10	0.55	5.50
76.0	660	5.40	19.250	4	77	6000	10	1.10	5.50
67.0	660	4.74	21.933	15	329	6450	10	1.10	5.50
58.0	578	3.62	25.056	18	451	7050	10	0.55	4.00
51.0	660	3.63	28.548	135	3854	7700	10	0.55	4.00
46.0	660	3.31	31.167	6	187	8100	10	0.55	3.00
41.0	660	2.91	35.511	45	1598	8500	10	0.55	3.00
36.0	545	2.11	40.333	3	121	8750	10	0.25	1.50
31.0	620	2.10	45.956	45	2068	8850	10	0.25	1.50
30.0	446	1.42	48.950	20	979	8900	10	0.25	1.10
26.0	508	1.42	55.773	75	4183	9000	10	0.25	1.10

Technical data at a glance

g500-S660, 3-stage gearboxes

Output speed	Max. output torque	Max. drive power	Ratio	Number of teeth		Max. radial force	Backlash	Rated power	
							Standard	Motor	
n_2	$M_{2, max}$	$P_{1, max}$	i	z_g	z_t	$F_{rad,max}$		$P_{N, min}$	$P_{N, max}$
							± 20 %		
[r/min]	[Nm]	[kW]				[N]	[arcmin]	[kW]	[kW]
29.0	625	1.98	49.867	15	748	9000	11	0.25	1.50
25.0	650	1.81	56.818	225	12784	9000	10	0.25	1.50
23.0	660	1.63	63.817	126	8041	9000	11	0.25	1.50
21.0	660	1.50	69.813	75	5236	9000	11	0.18	1.50
20.0	660	1.43	72.713	945	68714	9000	10	0.25	1.50
18.0	660	1.31	79.545	1125	89488	9000	10	0.18	1.50
16.0	660	1.17	89.048	21	1870	9000	11	0.18	1.10
14.0	660	1.03	101.460	63	6392	9000	10	0.18	1.10
13.0	660	0.95	109.083	12	1309	9000	11	0.25	1.10
12.0	660	0.85	124.289	45	5593	9000	10	0.25	0.75
11.0	660	0.77	137.133	15	2057	9000	11	0.12	0.75
9.00	660	0.67	156.249	225	35156	9000	10	0.12	0.75
8.00	660	0.58	176.611	18	3179	9000	11	0.12	0.55
7.00	660	0.51	201.230	135	27166	9000	10	0.12	0.55
6.00	660	0.46	223.833	6	1343	9000	11	0.12	0.37
6.00	660	0.40	255.034	495	126242	9000	10	0.12	0.37
5.00	603	0.33	280.500	2	561	9000	11	0.12	0.37
4.00	660	0.32	319.600	5	1598	9000	10	0.12	0.37
4.00	447	0.18	369.548	42	15521	9000	11	0.12	0.18
3.00	511	0.18	421.060	315	132634	9000	10	0.12	0.18

Technical data at a glance

g500-S950, 2-stage gearboxes

Output speed	Max. output torque	Max. drive power	Ratio	Number of teeth		Max. radial force	Backlash	Rated power	
							Standard	Motor	
n_2	$M_{2, max}$	$P_{1, max}$	i	z_g	z_t	$F_{rad,max}$		$P_{N, min}$	$P_{N, max}$
							± 20 %		
[r/min]	[Nm]	[kW]				[N]	[arcmin]	[kW]	[kW]
337	621	22.6	4.380	92	403	8430	16	4.00	7.50
274	691	20.4	5.391	23	124	9100	15	2.20	7.50
245	732	19.3	6.038	575	3472	9490	15	2.20	7.50
192	783	16.2	7.702	161	1240	10300	14	1.10	7.50
162	950	16.6	9.100	10	91	10300	10	4.00	7.50
145	950	14.9	10.183	60	611	10300	10	4.00	7.50
132	950	13.5	11.200	5	56	10300	10	2.20	7.50
118	950	12.1	12.544	125	1568	10300	10	2.20	7.50
105	950	10.8	14.037	375	5264	10300	10	2.20	7.50
92.0	950	9.46	16.000	1	16	10300	10	1.10	7.50
82.0	950	8.46	17.905	21	376	10300	10	1.10	7.50
75.0	950	7.73	19.600	5	98	10300	10	2.20	7.50
67.0	950	6.90	21.933	15	329	10300	9	2.20	7.50
57.0	950	5.87	25.511	45	1148	10300	10	1.10	5.50
51.0	950	5.24	28.548	135	3854	10300	9	1.10	5.50
46.0	950	4.77	31.267	15	469	10300	9	1.10	4.00
42.0	950	4.26	34.989	90	3149	10300	9	1.10	4.00
35.0	950	3.62	41.067	15	616	10300	9	0.55	3.00
32.0	950	3.23	45.956	45	2068	10300	9	0.55	3.00
29.0	924	2.90	49.840	25	1246	10300	9	0.55	2.20
26.0	950	2.67	55.773	75	4183	10300	9	0.55	2.20
23.0	668	1.65	63.000	1	63	10300	9	0.55	1.10
20.0	736	1.63	70.500	2	141	10300	9	0.55	1.10

Technical data at a glance

g500-S950, 3-stage gearboxes

Output speed	Max. output torque	Max. drive power	Ratio	Number of teeth		Max. radial force	Backlash	Rated power	
							Standard	Motor	
n_2	$M_{2, max}$	$P_{1, max}$	i	z_g	z_t	$F_{rad,max}$		$P_{N, min}$	$P_{N, max}$
							± 20 %		
[r/min]	[Nm]	[kW]				[N]	[arcmin]	[kW]	[kW]
29.0	950	3.02	50.027	75	3752	10300	10	1.10	3.00
26.0	950	2.70	55.982	225	12596	10300	10	1.10	3.00
23.0	950	2.36	64.022	45	2881	10300	10	0.55	2.20
21.0	950	2.15	70.037	375	26264	10300	10	0.25	2.20
20.0	950	2.11	71.644	1890	135407	10300	10	0.55	2.20
18.0	950	1.93	78.375	1125	88172	10300	10	0.25	2.20
16.0	950	1.68	89.333	3	268	10300	10	0.25	1.50
14.0	950	1.50	99.968	63	6298	10300	10	0.25	1.50
13.0	950	1.37	109.433	30	3283	10300	10	0.55	1.50
12.0	950	1.23	122.461	180	22043	10300	10	0.55	1.50
10.0	950	1.05	142.437	135	19229	10300	10	0.25	1.10
9.00	950	0.95	159.394	810	129109	10300	10	0.25	1.10
8.00	950	0.85	177.178	45	7973	10300	10	0.25	0.75
7.00	950	0.76	198.270	270	53533	10300	10	0.25	0.75
6.00	950	0.66	229.289	45	10318	10300	10	0.12	0.75
6.00	950	0.57	256.585	135	34639	10300	10	0.12	0.55
5.00	950	0.52	278.273	150	41741	10300	10	0.12	0.55
4.00	950	0.47	311.401	900	280261	10300	10	0.12	0.55
4.00	950	0.42	355.658	120	42679	10300	10	0.12	0.37
4.00	950	0.36	397.999	720	286559	10300	10	0.12	0.37

Technical data at a glance

g500-S2100, 2-stage gearboxes

Output speed	Max. output torque	Max. drive power	Ratio	Number of teeth		Max. radial force	Backlash	Rated power	
							Standard	Motor	
n_2	$M_{2, max}$	$P_{1, max}$	i	z_g	z_t	$F_{rad,max}$		$P_{N, min}$	$P_{N, max}$
							± 20 %		
[r/min]	[Nm]	[kW]				[N]	[arcmin]	[kW]	[kW]
322	1331	46.2	4.593	150	689	10430	12	7.50	30.00
245	1487	39.3	6.029	378	2279	11540	12	4.00	30.00
215	1487	34.5	6.870	54	371	12110	11	4.00	30.00
179	1487	28.7	8.272	378	3127	12980	11	2.20	22.00
156	1866	31.5	9.452	425	4017	13630	8	5.50	30.00
141	1872	28.4	10.504	125	1313	14180	8	5.50	30.00
119	2030	26.1	12.406	357	4429	15080	8	4.00	30.00
107	2047	23.7	13.787	315	4343	15680	8	4.00	22.00
105	2050	23.2	14.137	51	721	15700	8	4.00	22.00
94.0	2050	20.8	15.711	45	707	15700	8	4.00	22.00
87.0	2050	19.2	17.022	357	6077	15700	7	2.20	22.00
78.0	2050	17.4	18.917	315	5959	15700	7	2.20	18.50
71.0	2050	15.7	20.869	153	3193	15700	7	4.00	18.50
63.0	2050	14.0	23.193	135	3131	15700	7	4.00	15.00
52.0	2050	11.6	28.275	51	1442	15700	8	2.20	7.50
47.0	2050	10.4	31.422	45	1414	15700	8	2.20	7.50
43.0	2050	9.51	34.333	3	103	15700	8	2.20	7.50
39.0	2050	8.56	38.156	45	1717	15700	8	2.20	7.50
33.0	1983	7.00	44.431	51	2266	15700	8	1.10	4.00
29.0	2050	6.51	49.378	45	2222	15700	7	1.10	4.00
27.0	1957	5.68	53.924	170	9167	15700	7	1.10	4.00
24.0	2050	5.35	59.927	150	8989	15700	7	1.10	4.00
21.0	1454	3.34	68.162	68	4635	15700	7	1.10	2.20
19.0	1576	3.27	75.750	4	303	15700	7	1.10	2.20

Technical data at a glance

g500-S2100, 3-stage gearboxes

Output speed	Max. output torque	Max. drive power	Ratio	Number of teeth		Max. radial force	Backlash	Rated power	
							Standard	Motor	
n_2	$M_{2, max}$	$P_{1, max}$	i	z_g	z_t	$F_{rad,max}$		$P_{N, min}$	$P_{N, max}$
							± 20 %		
[r/min]	[Nm]	[kW]				[N]	[arcmin]	[kW]	[kW]
37.0	1945	7.86	40.056	18	721	15700	8	2.20	7.50
33.0	2050	7.46	44.515	270	12019	15700	8	2.20	7.50
27.0	2050	6.04	54.933	15	824	15700	8	2.20	7.50
24.0	2050	5.37	61.049	225	13736	15700	8	2.20	5.50
21.0	2050	4.67	70.302	63	4429	15700	8	1.10	5.50
19.0	2050	4.25	76.907	75	5768	15700	8	1.10	4.00
19.0	2050	4.18	78.128	945	73831	15700	8	1.10	4.00
17.0	2050	3.82	85.468	1125	96152	15700	8	1.10	4.00
15.0	2050	3.32	98.095	21	2060	15700	8	0.55	4.00
13.0	2050	2.99	109.016	63	6868	15700	8	0.55	3.00
12.0	2050	2.72	120.167	6	721	15700	8	1.10	3.00
11.0	2050	2.45	133.544	90	12019	15700	8	1.10	3.00
9.00	2050	2.09	156.407	27	4223	15700	8	0.55	2.20
8.00	2050	1.89	173.820	405	70397	15700	8	0.55	2.20
7.00	2050	1.66	194.556	9	1751	15700	8	0.55	1.50
7.00	2050	1.51	216.215	135	29189	15700	8	0.55	1.50
6.00	2050	1.28	251.778	9	2266	15700	8	0.25	1.50
5.00	2050	1.17	279.807	135	37774	15700	8	0.25	1.10
5.00	2050	1.06	305.567	30	9167	15700	8	0.25	1.10
4.00	2050	0.97	339.584	450	152813	15700	8	0.25	1.10
4.00	1878	0.74	386.250	4	1545	15700	8	0.25	0.55
3.00	2050	0.74	429.250	4	1717	15700	8	0.25	0.55

Technical data at a glance

g500-S3100, 2-stage gearboxes

Output speed	Max. output torque	Max. drive power	Ratio	Number of teeth		Max. radial force	Backlash	Rated power	
							Standard	Motor	
n_2	$M_{2, max}$	$P_{1, max}$	i	z_g	z_t	$F_{rad,max}$		$P_{N, min}$	$P_{N, max}$
							± 20 %		
[r/min]	[Nm]	[kW]				[N]	[arcmin]	[kW]	[kW]
298	1842	59.4	4.951	575	2847	14000	10	7.50	30.00
227	2110	51.8	6.499	483	3139	15000	10	4.00	30.00
200	2235	48.2	7.406	69	511	16000	10	4.00	30.00
166	2264	40.6	8.917	483	4307	16500	10	2.20	22.00
135	2275	33.2	10.932	207	2263	16800	10	4.00	22.00
133	3022	43.3	11.128	125	1391	17000	7	7.50	30.00
118	2965	37.6	12.584	125	1573	17500	7	7.50	30.00
101	3100	33.9	14.606	315	4601	18000	6	4.00	30.00
90.0	3100	29.9	16.517	315	5203	18200	6	4.00	30.00
89.0	3100	29.7	16.644	45	749	18600	6	4.00	30.00
78.0	3100	26.3	18.822	45	847	19000	6	4.00	30.00
74.0	3100	24.7	20.041	315	6313	19400	6	2.20	22.00
65.0	3100	21.9	22.663	315	7139	19800	6	2.20	22.00
60.0	3100	20.1	24.570	135	3317	19800	6	4.00	22.00
53.0	3100	17.8	27.785	135	3751	19800	6	4.00	22.00
44.0	3100	14.9	33.289	45	1498	19800	6	2.20	7.50
39.0	3100	13.1	37.644	45	1694	19800	6	2.20	7.50
36.0	3100	12.2	40.422	45	1819	19800	6	2.20	7.50
32.0	3100	10.8	45.711	45	2057	19800	6	2.20	7.50
28.0	2335	7.01	52.311	45	2354	19800	6	1.10	4.00
25.0	2641	7.01	59.156	45	2662	19800	6	1.10	4.00
23.0	2250	5.56	63.487	150	9523	19800	6	1.10	4.00
20.0	2408	5.25	71.793	150	10769	19800	6	1.10	4.00

Technical data at a glance

g500-S3100, 3-stage gearboxes

Output speed	Max. output torque	Max. drive power	Ratio	Number of teeth		Max. radial force	Backlash	Rated power	
							Standard	Motor	
n_2	$M_{2, max}$	$P_{1, max}$	i	z_g	z_t	$F_{rad,max}$		$P_{N, min}$	$P_{N, max}$
							± 20 %		
[r/min]	[Nm]	[kW]				[N]	[arcmin]	[kW]	[kW]
31.0	2958	10.2	47.159	270	12733	19800	7	2.20	7.50
28.0	3054	9.27	53.330	270	14399	19800	7	2.20	7.50
23.0	3100	7.74	64.676	225	14552	19800	7	2.20	7.50
20.0	3100	6.86	73.138	225	16456	19800	7	2.20	7.50
18.0	3100	6.05	82.769	945	78217	19800	7	1.10	7.50
16.0	3100	5.47	90.546	1125	101864	19800	7	1.10	5.50
16.0	3100	5.30	93.599	945	88451	19800	7	1.10	5.50
14.0	3100	4.86	102.393	1125	115192	19800	6	1.10	5.50
13.0	3100	4.28	115.492	63	7276	19800	7	0.55	4.00
11.0	3100	3.77	130.603	63	8228	19800	6	0.55	4.00
10.0	3100	3.50	141.478	90	12733	19800	6	1.10	4.00
9.00	3100	3.09	159.989	90	14399	19800	6	1.10	3.00
8.00	3100	2.68	184.146	405	74579	19800	6	0.55	3.00
7.00	3100	2.38	208.240	405	84337	19800	6	0.55	2.20
6.00	3100	2.14	229.059	135	30923	19800	6	0.55	2.20
6.00	3100	1.90	259.030	135	34969	19800	6	0.55	2.20
5.00	3100	1.66	296.430	135	40018	19800	6	0.25	1.50
4.00	3100	1.46	335.215	135	45254	19800	6	0.25	1.50
4.00	3100	1.36	359.758	450	161891	19800	6	0.25	1.10
4.00	3100	1.19	406.829	450	183073	19800	6	0.25	1.10

Technical data at a glance

g500-S4500, 2-stage gearboxes

Output speed	Max. output torque	Max. drive power	Ratio	Number of teeth		Max. radial force	Backlash	Rated power	
							Standard	Motor	
n_2	$M_{2, max}$	$P_{1, max}$	i	z_g	z_t	$F_{rad,max}$		$P_{N, min}$	$P_{N, max}$
							± 20 %		
[r/min]	[Nm]	[kW]				[N]	[arcmin]	[kW]	[kW]
301	2113	68.6	4.914	500	2457	16500	9	15.00	30.00
229	2451	60.6	6.450	20	129	18500	9	11.00	30.00
210	2535	57.3	7.056	125	882	19000	9	7.50	30.00
165	3845	68.6	8.944	125	1118	14000	6	15.00	30.00
148	4163	66.5	9.984	125	1248	16000	5	15.00	30.00
126	4451	60.5	11.740	315	3698	17000	6	11.00	30.00
115	4500	55.9	12.843	375	4816	18000	5	7.50	30.00
113	4500	54.8	13.105	105	1376	18500	5	11.00	30.00
103	4500	50.1	14.336	125	1792	19000	5	7.50	30.00
90.0	4500	43.8	16.381	21	344	21000	5	4.00	30.00
81.0	4500	39.2	18.286	7	128	22000	5	4.00	30.00
74.0	4500	35.8	20.067	15	301	23500	5	5.50	22.00
66.0	4500	32.1	22.400	5	112	25000	4	5.50	22.00
56.0	4500	27.2	26.437	135	3569	27000	5	4.00	22.00
50.0	4500	24.4	29.511	45	1328	29000	4	4.00	22.00
46.0	4500	22.1	32.489	45	1462	30000	5	4.00	22.00
41.0	4500	19.8	36.267	15	544	30000	4	4.00	22.00
35.0	4101	15.5	42.044	45	1892	30000	5	2.20	7.50
32.0	4394	14.9	46.933	15	704	30000	4	2.20	7.50
29.0	3653	11.4	51.027	75	3827	30000	5	2.20	7.50
26.0	3946	11.0	56.960	25	1424	30000	4	2.20	7.50
22.0	2414	5.86	64.500	2	129	30000	5	2.20	4.00
20.0	2586	5.64	72.000	1	72	30000	4	2.20	4.00

Technical data at a glance

g500-S4500, 3-stage gearboxes

Output speed	Max. output torque	Max. drive power	Ratio	Number of teeth		Max. radial force	Backlash	Rated power	
							Standard	Motor	
n_2	$M_{2, max}$	$P_{1, max}$	i	z_g	z_t	$F_{rad,max}$		$P_{N, min}$	$P_{N, max}$
							± 20 %		
[r/min]	[Nm]	[kW]				[N]	[arcmin]	[kW]	[kW]
39.0	4150	17.7	38.090	1305	49708	30000	6	4.00	22.00
35.0	4291	16.4	42.520	435	18496	30000	5	4.00	18.50
28.0	4500	13.7	52.794	180	9503	30000	5	4.00	15.00
25.0	4500	12.3	58.933	15	884	30000	5	4.00	15.00
23.0	4500	11.2	64.978	45	2924	30000	5	2.20	11.00
20.0	4500	10.1	72.533	15	1088	30000	5	2.20	11.00
20.0	4500	10.0	72.775	1125	81872	30000	5	2.20	11.00
18.0	4500	8.97	81.237	375	30464	30000	5	2.20	11.00
16.0	4500	7.84	92.825	63	5848	30000	5	1.10	7.50
14.0	4500	7.05	103.619	21	2176	30000	5	1.10	7.50
13.0	4500	6.41	113.711	45	5117	30000	5	2.20	7.50
12.0	4500	5.67	126.933	15	1904	30000	5	2.20	5.50
10.0	4500	4.88	148.005	405	59942	30000	5	1.10	5.50
9.00	4500	4.34	165.215	135	22304	30000	5	1.10	4.00
8.00	4500	3.94	181.396	270	48977	30000	5	1.10	4.00
7.00	4500	3.55	202.489	45	9112	30000	5	1.10	4.00
6.00	4500	3.01	238.252	135	32164	30000	5	0.55	3.00
5.00	4500	2.66	265.956	45	11968	30000	5	0.55	3.00
5.00	4500	2.47	289.151	225	65059	30000	5	0.55	2.20
4.00	4500	2.22	322.773	75	24208	30000	5	0.55	2.20
4.00	3962	1.74	365.500	2	731	30000	5	0.55	1.10
4.00	4410	1.69	408.000	1	408	30000	5	0.55	1.10

Technical data at a glance

g500-S8000, 2-stage gearboxes

Output speed	Max. output torque	Max. drive power	Ratio	Number of teeth		Max. radial force	Backlash	Rated power	
							Standard	Motor	
n_2	$M_{2, max}$	$P_{1, max}$	i	z_g	z_t	$F_{rad,max}$		$P_{N, min}$	$P_{N, max}$
							± 20 %		
[r/min]	[Nm]	[kW]				[N]	[arcmin]	[kW]	[kW]
326	5650	199	4.550	29	132	25000	9	37.00	55.00
255	5680	156	5.820	325	1892	27000	8	30.00	55.00
223	5690	137	6.640	169	1122	28500	8	30.00	55.00
183	5690	113	8.090	299	2420	30000	8	22.00	55.00
165	6770	121	8.970	29	260	31000	7	22.00	55.00
129	7320	102	11.470	15	172	33000	6	18.50	55.00
113	7620	93.2	13.080	13	170	35000	6	18.50	55.00
93.0	8000	80.3	15.940	69	1100	37000	6	15.00	55.00
82.0	8000	70.7	18.100	21	380	39000	6	15.00	55.00
75.0	8000	65.0	19.710	69	1360	42000	6	11.00	55.00
67.0	8000	57.6	22.220	9	200	43000	6	11.00	55.00
59.0	8000	51.2	24.930	69	1720	46000	6	11.00	45.00
53.0	8000	45.7	27.940	63	1760	48000	6	11.00	45.00
47.0	8000	40.9	31.110	9	280	50000	6	7.50	30.00
42.0	8000	36.4	34.930	15	524	52000	6	7.50	22.00
38.0	8000	33.1	38.550	69	2660	52500	6	5.50	15.00
34.0	8000	29.0	43.890	9	395	58000	6	5.50	15.00
30.0	8000	26.3	48.480	33	1600	60000	6	5.50	15.00

Technical data at a glance

g500-S8000, 3-stage gearboxes

Output speed	Max. output torque	Max. drive power	Ratio	Number of teeth		Max. radial force	Backlash	Rated power	
							Standard	Motor	
n_2	$M_{2, max}$	$P_{1, max}$	i	z_g	z_t	$F_{rad,max}$		$P_{N, min}$	$P_{N, max}$
							± 20 %		
[r/min]	[Nm]	[kW]				[N]	[arcmin]	[kW]	[kW]
46.0	7510	37.6	32.330	429	13870	52000	7	7.50	45.00
38.0	7970	32.7	39.430	759	29930	54000	7	5.50	37.00
32.0	8000	28.5	45.300	693	31390	56000	7	5.50	30.00
29.0	8000	25.8	50.010	759	37960	58000	7	5.50	30.00
26.0	8000	22.9	56.370	91	5130	59000	6	5.50	22.00
21.0	8000	18.8	68.760	161	11070	61000	6	5.50	22.00
19.0	8000	16.3	78.980	49	3870	63000	6	3.00	18.50
17.0	8000	14.8	87.200	161	14040	65000	6	3.00	15.00
15.0	8000	13.1	99.180	49	4860	65000	6	2.20	15.00
13.0	8000	11.5	112.360	161	18090	65000	6	2.20	11.00
12.0	8000	10.2	126.730	49	6210	65000	6	2.20	11.00
10.0	8000	9.11	141.430	7	990	65000	6	2.20	11.00
9.00	8000	8.06	158.910	35	5562	65000	6	2.20	7.50
8.00	8000	7.19	179.440	161	28890	65000	6	2.20	7.50
7.00	8000	6.31	202.500	2	405	65000	6	2.20	7.50
7.00	8000	5.78	224.420	77	17280	65000	6	2.20	5.50
6.00	8000	5.08	252.640	14	3537	65000	6	2.20	5.50
5.00	8000	4.56	285.000	1	285	65000	6	2.20	5.50
5.00	8000	4.21	304.030	119	36180	65000	6	2.20	4.00
4.00	8000	3.94	323.040	28	9045	65000	6	2.20	4.00
4.00	8000	3.42	377.000	49	18495	65000	6	2.20	4.00

Technical data at a glance

g500-S14000, 2-stage gearboxes

Output speed	Max. output torque	Max. drive power	Ratio	Number of teeth		Max. radial force	Backlash	Rated power	
							Standard	Motor	
n_2	$M_{2, max}$	$P_{1, max}$	i	z_g	z_t	$F_{rad,max}$		$P_{N, min}$	$P_{N, max}$
							± 20 %		
[r/min]	[Nm]	[kW]				[N]	[arcmin]	[kW]	[kW]
326	7300	257	4.550	29	132	36500	8	45.00	55.00
259	8210	230	5.720	377	2156	36000	8	45.00	55.00
206	8310	185	7.180	325	2332	38900	7	37.00	55.00
184	8350	166	8.070	169	1364	39300	7	30.00	55.00
165	10400	185	8.970	29	260	42000	6	37.00	55.00
132	11700	166	11.260	87	980	44000	6	30.00	55.00
105	12900	146	14.130	15	212	47000	6	30.00	55.00
93.0	13500	136	15.900	39	620	50000	6	30.00	55.00
78.0	13600	114	19.130	23	440	53000	6	22.00	55.00
70.0	13600	102	21.270	63	1340	57000	6	18.50	55.00
63.0	13600	92.7	23.480	23	540	59000	6	18.50	55.00
56.0	13600	82.5	26.350	63	1660	61000	6	15.00	55.00
50.0	13600	72.7	29.860	69	2060	63000	6	15.00	45.00
45.0	13600	65.8	33.020	63	2080	66000	6	11.00	45.00
40.0	13600	58.4	36.940	18	665	67000	6	11.00	30.00
36.0	13600	52.6	41.070	15	616	68000	6	11.00	22.00
33.0	12400	43.9	44.930	69	3100	71000	5	7.50	15.00

Technical data at a glance

g500-S14000, 3-stage gearboxes

Output speed	Max. output torque	Max. drive power	Ratio	Number of teeth		Max. radial force	Backlash	Rated power	
							Standard	Motor	
n_2	$M_{2, max}$	$P_{1, max}$	i	z_g	z_t	$F_{rad,max}$		$P_{N, min}$	$P_{N, max}$
							± 20 %		
[r/min]	[Nm]	[kW]				[N]	[arcmin]	[kW]	[kW]
46.0	13600	69.1	31.920	145	4628	66000	6	15.00	55.00
36.0	13600	54.1	40.820	375	15308	68000	6	11.00	55.00
32.0	13600	47.4	46.550	65	3026	71000	6	11.00	55.00
29.0	13600	43.5	50.630	493	24960	73000	6	7.50	45.00
23.0	13600	34.0	64.750	85	5504	73500	6	7.50	37.00
20.0	13600	29.8	73.850	13	960	73500	6	5.50	37.00
16.0	13600	24.3	90.030	391	35200	73500	6	5.50	30.00
14.0	13600	21.4	102.180	119	12160	73500	6	4.00	22.00
13.0	13600	19.7	111.300	23	2560	73500	6	4.00	22.00
12.0	13600	17.4	125.490	51	6400	73500	6	4.00	18.50
10.0	13600	15.5	140.770	391	55040	73500	6	4.00	18.50
9.00	13600	13.8	157.760	357	56320	73500	6	4.00	15.00
8.00	13600	12.5	175.690	51	8960	73500	6	4.00	15.00
8.00	13600	11.2	197.270	85	16768	73500	6	4.00	11.00
7.00	13600	10.1	217.700	391	85120	73500	6	4.00	11.00
6.00	13600	8.94	247.840	51	12640	73500	6	4.00	11.00
5.00	13600	8.04	273.800	187	51200	73500	6	4.00	7.50
5.00	13600	7.15	304.940	17	5184	73500	6	4.00	7.50
4.00	13600	6.41	343.010	153	52480	73500	6	4.00	7.50
4.00	13600	5.96	368.000	289	106240	73500	6	4.00	5.50

Technical data at a glance

g500-S19000, 2-stage gearboxes

Output speed	Max. output torque	Max. drive power	Ratio	Number of teeth		Max. radial force	Backlash	Rated power	
							Standard	Motor	
n_2	$M_{2, max}$	$P_{1, max}$	i	z_g	z_t	$F_{rad,max}$		$P_{N, min}$	$P_{N, max}$
							± 20 %		
[r/min]	[Nm]	[kW]				[N]	[arcmin]	[kW]	[kW]
175	14700	278	8.470	450	3811	51000	5	55.00	55.00
136	16300	240	10.890	435	4738	52000	5	45.00	55.00
112	17600	212	13.260	435	5768	54000	5	37.00	55.00
91.0	19000	187	16.210	375	6077	58000	5	37.00	55.00
79.0	19000	162	18.750	390	7313	60000	5	30.00	55.00
67.0	19000	138	22.090	345	7622	65000	5	30.00	55.00
60.0	19000	122	24.850	315	7828	67000	5	22.00	55.00
54.0	19000	112	27.170	345	9373	72000	5	18.50	55.00
49.0	19000	99.9	30.410	105	3193	75000	5	18.50	55.00
43.0	19000	89.0	34.030	115	3914	79000	5	15.00	45.00
39.0	19000	80.0	37.930	315	11948	85000	5	15.00	45.00

Technical data at a glance

g500-S19000, 3-stage gearboxes

Output speed	Max. output torque	Max. drive power	Ratio	Number of teeth		Max. radial force	Backlash	Rated power	
							Standard	Motor	
n_2	$M_{2, max}$	$P_{1, max}$	i	z_g	z_t	$F_{rad,max}$		$P_{N, min}$	$P_{N, max}$
							± 20 %		
[r/min]	[Nm]	[kW]				[N]	[arcmin]	[kW]	[kW]
46.0	19000	95.5	32.320	290	9373	79000	5	18.50	55.00
36.0	19000	76.0	40.610	870	35329	85000	5	15.00	55.00
30.0	19000	62.4	49.430	2465	121849	100000	5	18.50	55.00
24.0	19000	49.7	62.110	7395	459277	105000	5	11.00	55.00
19.0	19000	39.5	77.920	6375	496769	110000	5	7.50	45.00
17.0	19000	35.2	87.650	255	22351	111000	5	7.50	37.00
14.0	19000	28.9	105.480	1955	206206	111000	5	5.50	30.00
12.0	19000	26.0	117.270	765	89713	111000	5	5.50	30.00
11.0	19000	23.7	129.450	1955	253071	111000	5	4.00	22.00
10.0	19000	21.0	145.280	765	111137	111000	5	4.00	22.00
9.00	19000	18.5	164.610	5865	965419	111000	5	4.00	22.00
8.00	19000	16.9	182.030	765	139256	111000	5	4.00	18.50
7.00	19000	15.0	203.690	6120	1246609	111000	5	4.00	18.50
6.00	19000	13.5	226.420	6375	1443442	111000	5	4.00	15.00
6.00	19000	12.5	247.710	1173	290563	111000	5	4.00	15.00
5.00	19000	11.0	280.270	2040	571753	111000	5	4.00	11.00
5.00	19000	9.78	310.760	935	290563	111000	5	4.00	11.00
4.00	19000	8.74	347.350	1700	590499	111000	5	4.00	11.00

Gearbox with mounting flange

The gearboxes with mounting flange are available for mounting the following motors:
- Three-phase AC motor according to IEC 72/DIN 42948 with FT/FF flange mounting
- Three-phase AC motor according to NEMA with C/TC flange mounting
- Servo motors with FT/FF flange mounting according to IEC 72/DIN 42948

Mounting flange for three-phase AC motors

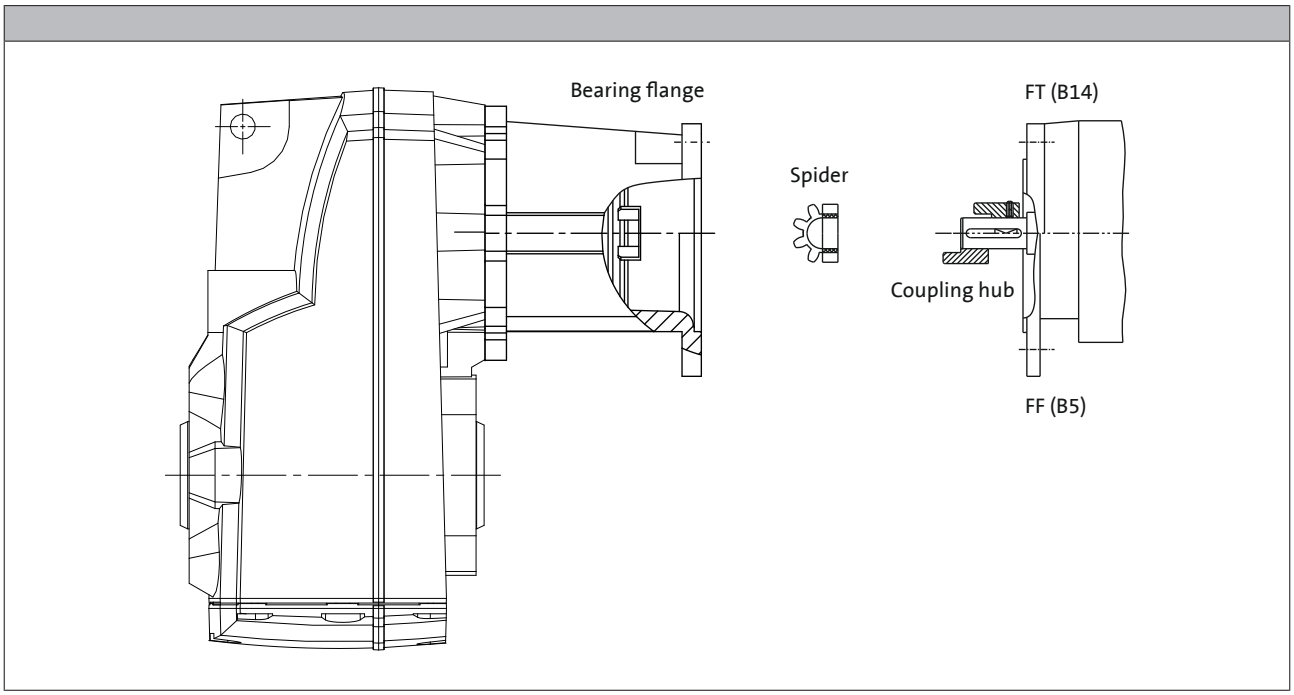

Mounting flange
- For three-phase AC motors according to IEC 72/DIN 42948
- For three-phase AC motors according to NEMA C
- Two-bearing shaft
- Coupling half on the gearbox side integrated in the shaft

Spider (ring gear)
- Torsionally rigid
- Conformal
- Low backlash (with clamping hub / backlash-free clamping ring hub)

Coupling hub
Standard:
- Coupling hub with keyway for motor shafts according to IEC

Optional coupling hubs for frequent shocks and load alternations or reduced clutch backlash:
- Clamping hub with tangential terminal screw for motor shafts with featherkey, backlash-free
- Clamping ring hub for motor shafts without slot, backlash-free

38 - Permissible drive power and output torques.

Gearbox with mounting flange

Mounting flange for three-phase AC motors

► The power information and motor sizes refer to 4-pole IEC standard motors.

Mounting flange for three-phase AC motors according to IEC

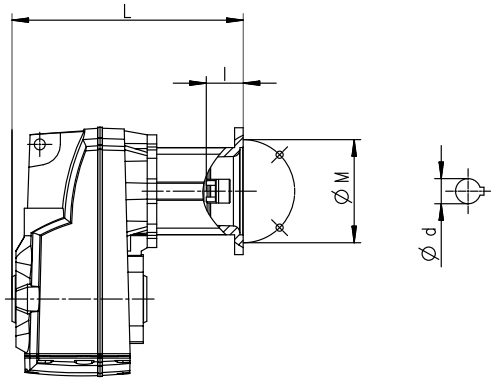

Motor				Bearing flange		Gearbox g500							
	Size					-S130	-S220	-S400	-S660	-S950	-S2100	-S3100	-S4500
P_1		d	l	M		L							
[kW]		[mm]	[mm]	[mm]		[mm]							
0.12 0.18	63	11	23	FF75	N1A	196	212	228	246				
					N2B	196	212	228	246	255	279	299	
				FF130	N6C [1]	213	229	245	263	272	296	316	367
0.25 0.37	71	14	30	FF85	N1B	213	229	245	263	272	296	316	
					N3C	213	229	245	263	272	296	316	367
				FF100	N4C	213	229	245	263	272	296	316	367
				FF130	N2C	213	229	245	263	272	296	316	367
0.55 0.75	80	19	40	FF100	N7C	213	229	245	263	272	296	316	367
				FF130	N1C	213	229	245	263	272	296	316	367
					N2D	242	258	274	292	301	325	345	396
					N3E		258	274	292	301	325	345	396
1.1 1.5	90	24	50	FF130	N1D [2]	242	258	274	292	301	325	345	396
					N2E		258	274	292	301	325	345	396
					N2F					301	325	345	396
				FF165	N4E		278	294	312	321	345	365	416
					N3F					321	345	365	416
2.2 3.0	100	28	60	Ff130	N1E		258	274	292	301	325	345	396
					N1F					301	325	345	396
4.0	112			FF215	N2G					365	389	409	460
5.5 7.5	132	38	80	FF215	N3G					385	409	429	480
				FF265	N1G					385	409	429	480
					N3H						448	468	520
11.0 15.0	160	42	110	FF300	N1H						478	498	550
18.5 22.0	180	48	110	FF300	N2H						478	498	550

[1] Only clamping hub available.

[2] Only standard and clamping hub available.

153 - More gearbox dimensions

251 - Product extensions

Gearbox with mounting flange

Mounting flange for three-phase AC motors

Mounting flange for three-phase AC motors according to NEMA

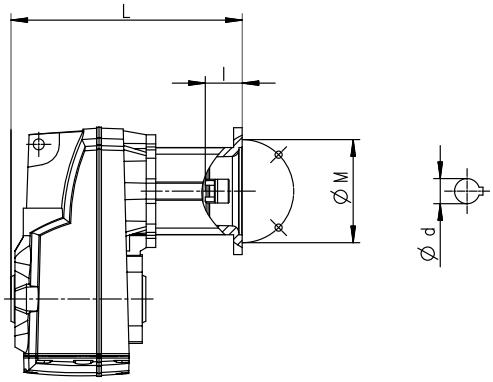

Motor			Bearing flange		Gearbox g500							
Size					-S130	-S220	-S400	-S660	-S950	-S2100	-S3100	-S4500
	d	l	M		L							
	[inch]	[inch]	[inch]		[mm]							
56 C	0.625	1.875	5.875	A5C	228	244	260	278	287	311	331	382
143/145 TC	0.875	2.250	5.875	A5D	266	282	298	316	325	349	369	420
182/184 TC	1.125	2.750	7.252	A5E		299	316	333	342	366	386	438
213/215 TC	1.375	3.375	7.252	A5G					410	434	454	506
254/256 TC	1.625	4.000	7.252	A5H						474	494	545
284/286 TC	1.875	4.625	9.000	A6H							503	555

153 - More gearbox dimensions

251 - Product extensions

Gearbox with mounting flange

Mounting flange for servo motors

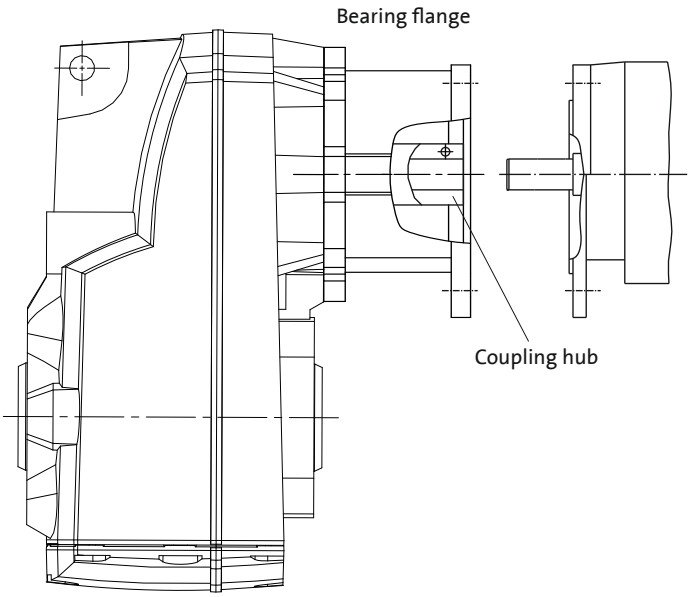

Mounting flange
- Flange dimensions according to IEC 72/DIN 42948
- Drive shaft designed as clamping hub with tangential terminal screw for motor shafts without featherkey, backlash-free
- overall lengths optimised

Gearbox with mounting flange

Mounting flange for servo motors

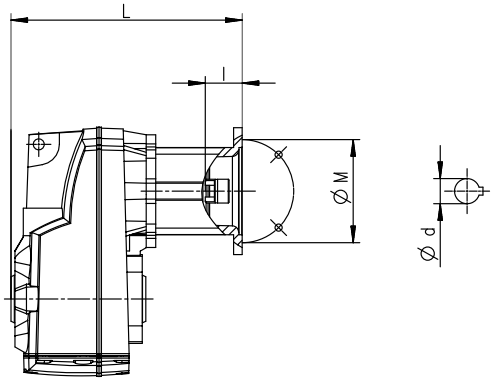

Motor			Bearing flange		Gearbox g500							
					-S130	-S220	-S400	-S660	-S950	-S2100	-S3100	-S4500
M	d	l	M		L							
[mm]	[mm]	[mm]	[mm]		[mm]							
75	11	23	FT75	S2B	152	168	184	202	211	235	255	
	14	30		S3B	152	168	184	202	211	235	255	
100	14	30	FF100	S4C	167	183	199	217	226	250	270	321
	19	40		S7C	167	183	199	217	226	250	270	321
	16	40		S8C	167	183	199	217	226	250	270	321
115	19	50	FF115	S3D	184	200	216	234	243	267	287	338
	24	50		S4D	184	200	216	234	243	267	287	338
130	19	50	FF130	S2D	184	200	216	234	243	267	287	338
	24	50		S1D	184	200	216	234	243	267	287	338
	24	60		S2E		200	216	234	243	267	287	338
	28	60		S1E		200	216	234	243	267	287	338
165	24	50	FF165	S4E		200	216	234	243	267	287	338
	32	58		S6E		200	216	234	243	267	287	338
	28	60		S7E		200	216	234	243	267	287	338

153 - More gearbox dimensions

251 - Product extensions

Surface and corrosion protection

For optimum protection of geared motors against ambient conditions, the surface and corrosion protection system (OKS) offers tailor-made solutions.

Various surface coatings combined with other protective measures ensure that the geared motors operate reliably even at high air humidity, in outdoor installations or in the presence of atmospheric impurities. Any colour from the RAL Classic collection can be chosen for the top coat. The geared motors are also available unpainted (no surface and corrosion protection).

Surface and corrosion protection	Applications	Product		
		g500-H45 ... H450 g500-S130 ... S660 g500-B45 ... B450	g500-H600 ... H3000 g500-S950 ... S4500 g500-B600 ... B4300	g500-H5000 ... H14000 g500-S8000 ... S19000 g500-B8000 ... B20000
Without OKS(uncoated) [1]	• Interior installation, no special corrosion protection required • Paint provided by the customer	Standard		
OKS-G (primed)	• Dependent on subsequent top coat applied	Optional	Optional	Optional
OKS-S (small)	• Standard applications • Internal installation in heated buildings • Air humidity up to 90%		Standard	Standard
OKS-M (medium)	• Internal installation in non-heated buildings • Covered, protected external installation • Air humidity up to 95%		Optional	Optional
OKS-L (large)	• External installation • Air humidity above 95% • Chemical industry plants • Food industry			
OKS-XL (extra Large) [2]	• External installation • Air humidity above 95 % • Chemical industry plants • Food industry • Coastal areas with moderate salinity			

[1] Aluminium parts are uncoated, fan covers are zinc-coated or primed in grey, cast iron parts primed in grey.
Light colour deviations of the components are possible.
[2] On request

Surface and corrosion protection

Structure of surface coating

Surface and corrosion protection	Corrosivity category	Surface coating	Colour	Coating thickness
	DIN EN ISO 12944-2	Structure		
Without OKS(uncoated)		• Dipping primer of the grey iron parts		30 ... 50 µm
OKS-G (primed)		• Dipping primer of the grey iron parts • 2K PUR priming coat		60 ... 90 µm
OKS-S (small)	Comparable to C1	• Dipping primer of the grey iron parts • 2K-PUR top coat	• Standard: RAL 7012 • Optional: RAL Classic	80 ... 120 µm
OKS-M (medium)	Comparable to C2	• Dipping primer of the grey iron parts • 2K PUR priming coat • 2K-PUR top coat		110 ... 160 µm
OKS-L (large)	Comparable to C3			140 ... 200 µm
OKS-XL (extra Large) [1]	Comparable to C4	• Dipping primer of the grey iron parts • 2K-EP priming coat (two times) • 2K-PUR top coat		160 ... 240 µm

[1] On request

Lubricants

Lenze gearboxes and geared motors are ready for operation on delivery and are filled with lubricants specific to both the drive and the design. The mounting position and design specified in the order are key factors in choosing the volume of lubricant.
The amount and type of lubricant contained in the gearbox are given on the nameplate.

The following gearboxes are lubricated for life:
- Helical gearbox g500-H45 ... 140
- Shaft-mounted helical gearbox g500-S130
- Bevel gearbox g500-B45 ... 240

Lubricant table

The following lubricants are recommended:

Mode	CLP 220	CLP 460	CLP HC 220
Ambient temperature [°C]	0 ... +40		-25 ... +50
Specification	Mineral oil with EP additives		Synthetic oil (polyalfaolefins basis)
Changing interval	16000 operating hours After 3 years at the latest Oil temperature 70 °C		25000 operating hours After 4 years at the latest Oil temperature 70 °C
Fuchs	Renolin CLP 220 CLP Plus 220	Renolin CLP 460 CLP Plus 460	Renolin Unisyn CLP 220 XT220
Klüber	Klüberoil GEM 1-220 N	Klüberoil GEM 1-460 N	Klübersynth GEM 4-220 N
Shell	Shell Omala S2 G 220 S2 GX 220	Shell Omala S2 G 460 S2 GX 460	Shell Omala S4 GX HD 220

Mode	CLP HC 320	CLP HC 220 USDA H1	CLP PG 460 USDA H1
Ambient temperature [°C]	-25 ... +50	-20 ... +40	
Specification	Synthetic oil (polyalfaolefins basis)		Synthetic oil (polyglycol basis)
Changing interval	25000 operating hours After 4 years at the latest Oil temperature 70 °C	16000 operating hours After 3 years at the latest Oil temperature 70 °C	
Fuchs	Renolin Unisyn CLP 320 XT 320	Cassida Fluid GL 220	Cassida Fluid WG 460
Klüber	Klübersynth GEM 4-320 N	Klüberoil 4 UH1-220 N	Klüberoil UH1 6-460
Shell	Shell Omala S4 GX HD 320		

► Please contact your Lenze sales office if you are operating at ambient temperatures in areas up to< -20 °C bzw. > or up to +40°C.

Shaft sealing rings

By default, the gearboxes come with NBR shaft sealing rings at the output end. At high speed and unfavourable ambient conditions such as high temperature, reduced circulation of air etc., Lenze recommends the use of FKM (Viton) shaft sealing rings.

Please consider this in your order.

Ventilation

Non-ventilated gearboxes

No ventilation is required for gearboxes g500-S130 ... S220

Ventilated gearboxes

From g500-S400 onwards, the gearboxes are supplied with a breather element as standard.

Gearbox in combined mounting position

For reducing the number of versions, the gearboxes can also be ordered in a combined mounting position:

- g500-S130 ... S660 in mounting position AEF

In these gearboxes, the lubricant amount has been optimised for the use in different mounting positions. -H45 in mounting position AB-CDEFg500-H100 ... H450 in mounting position AEF In these gearboxes, the lubricant amount has been optimised for the use in different mounting positions. If required, the breather elements are loosely enclosed and have to be mounted before commissioning depending on the mounting position.
A gearbox can be used for several mounting positions.

Ventilation

Position of ventilation, sealing elements and oil level check

g500-S130 ... S660

Mounting position A	Mounting position B	Mounting position C
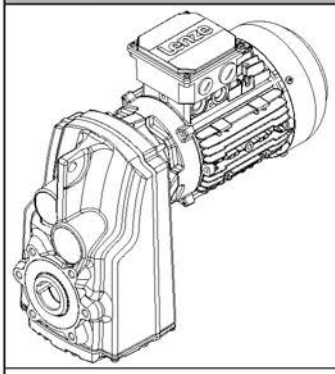	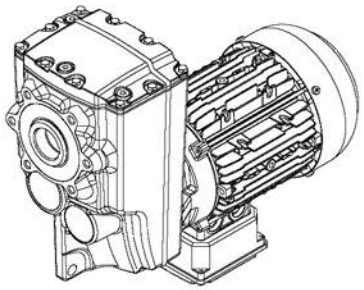	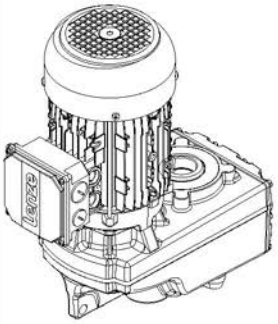
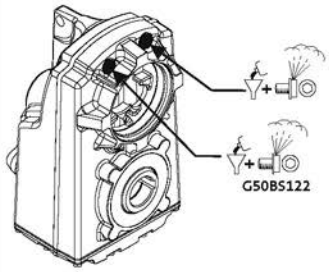	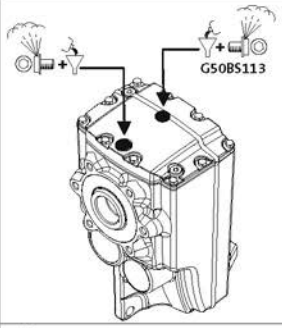	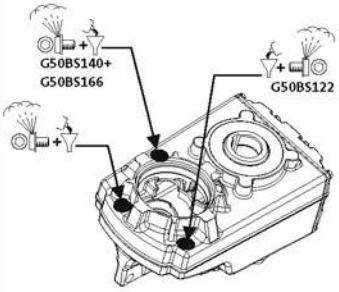
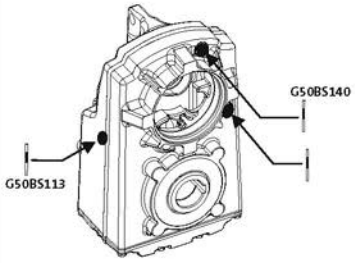	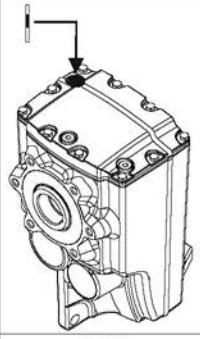	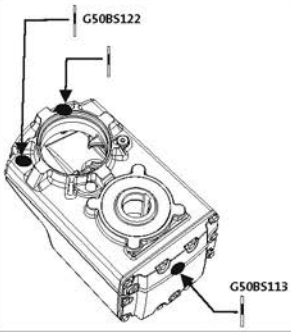
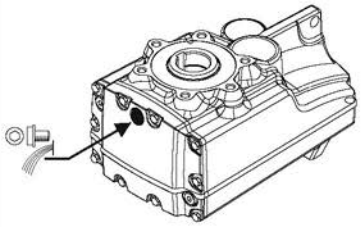	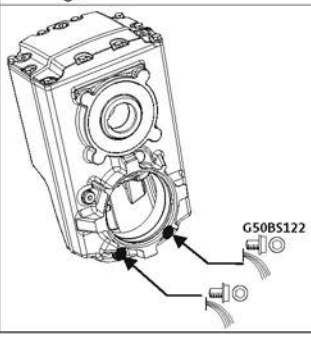	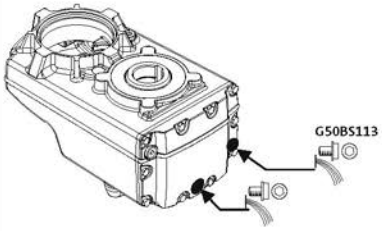

	Filling		Drain
	Breathing		Control

Ventilation

Position of ventilation, sealing elements and oil level check

g500-S130 ... S660

Mounting position D	Mounting position E	Mounting position F
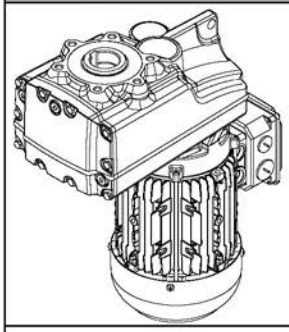	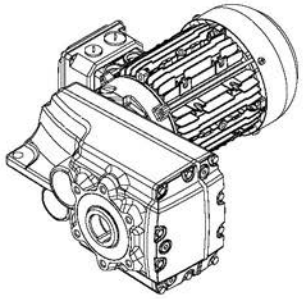	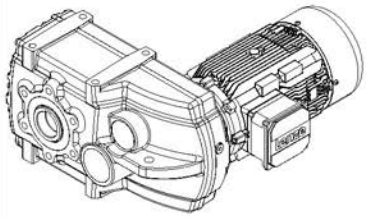
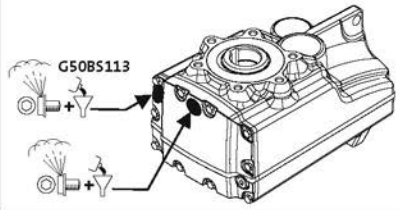	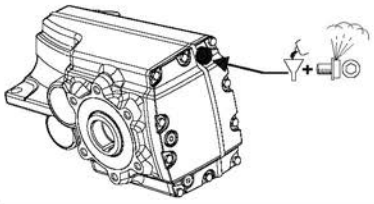	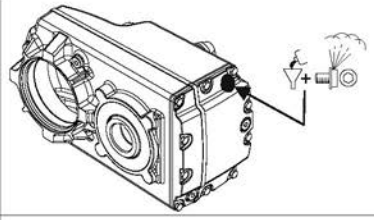
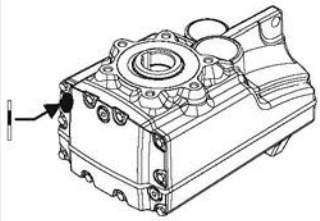	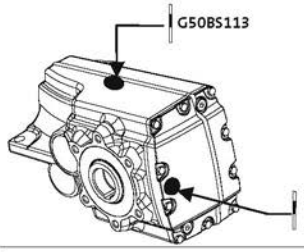	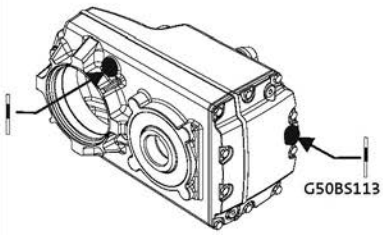
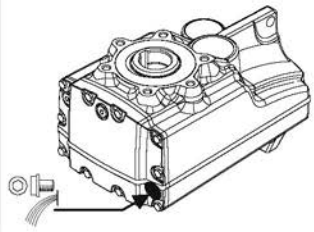	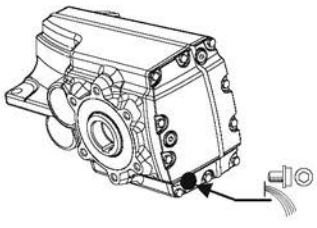	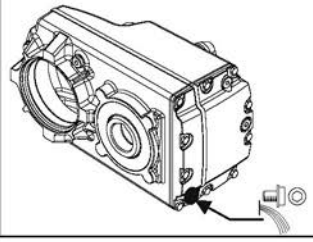

	Filling		Drain
	Breathing		Control

Ventilation

Position of ventilation, sealing elements and oil level check

g500-S950 ... S4500

Mounting position A	Mounting position B	Mounting position C
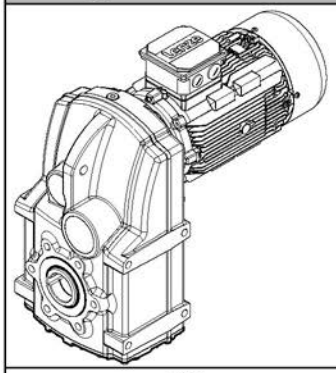	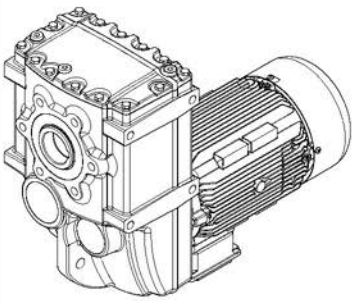	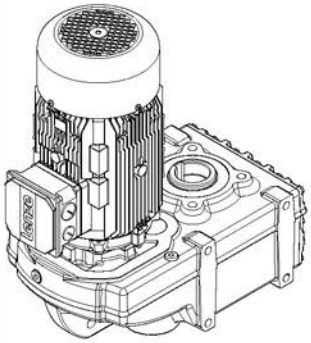
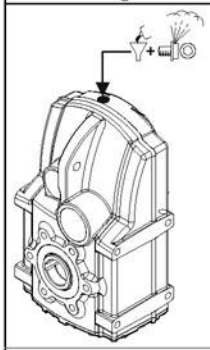	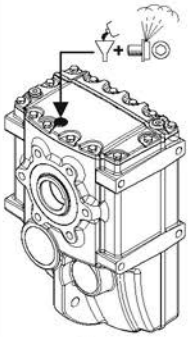	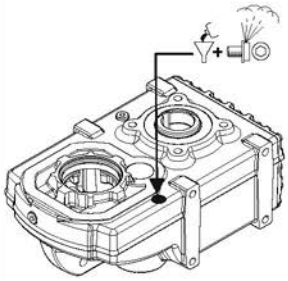
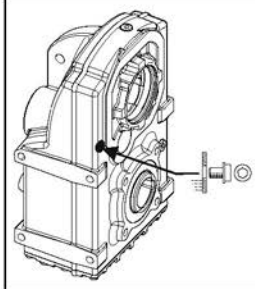	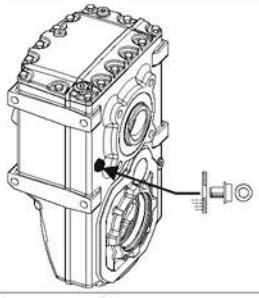	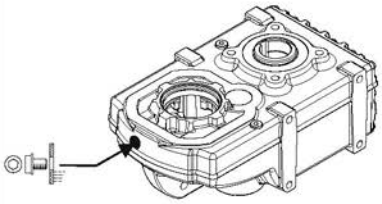
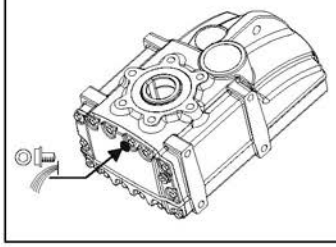	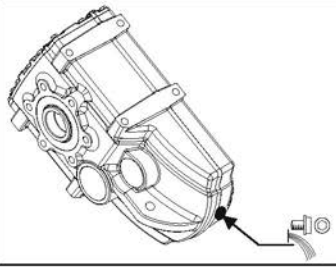	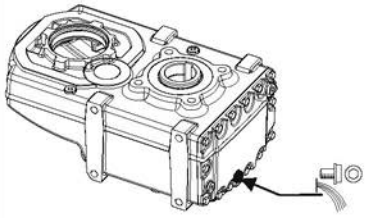

	Filling		Drain
	Breathing		Control

Ventilation

Position of ventilation, sealing elements and oil level check

g500-S950 ... S4500

Mounting position D	Mounting position E	Mounting position F
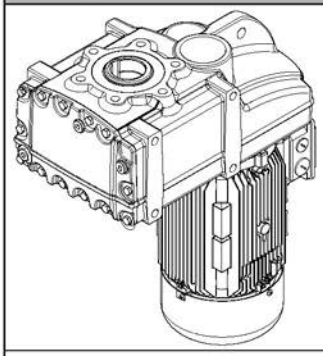	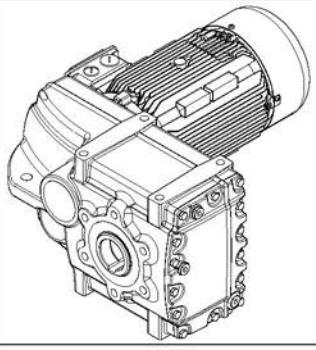	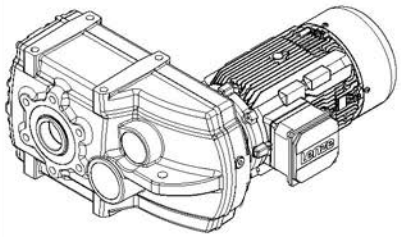
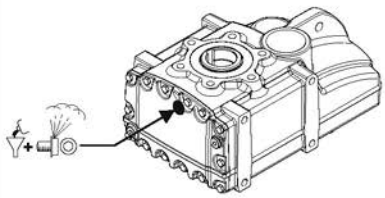	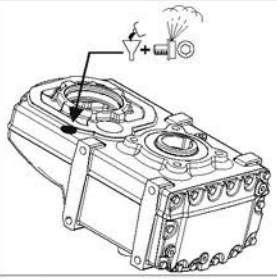	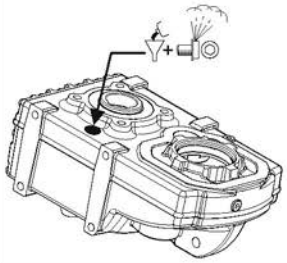
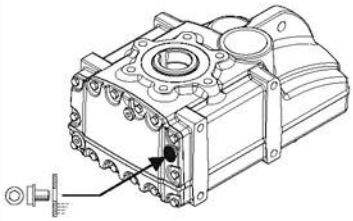	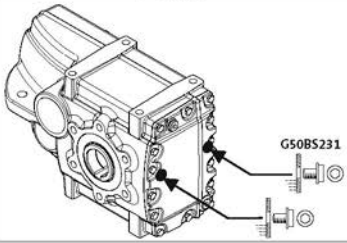	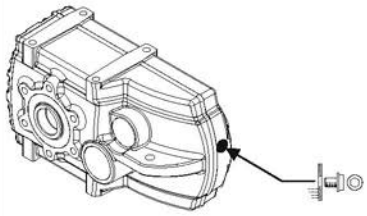
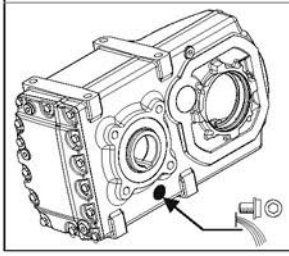	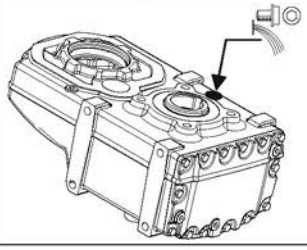	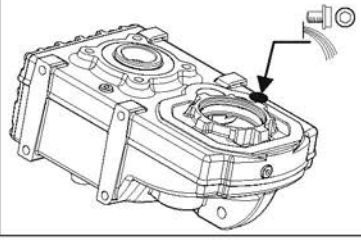

	Filling		Drain
	Breathing		Control

6.4

Ventilation

Position of ventilation, sealing elements and oil level check

g500-S8000 ... S19000

Mounting position A	Mounting position B	Mounting position C
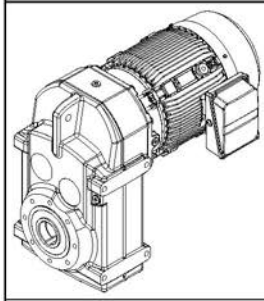	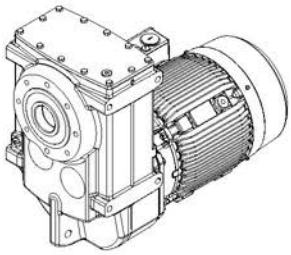	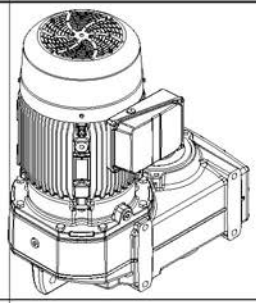
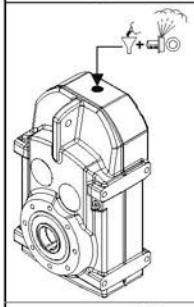	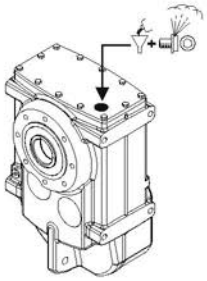	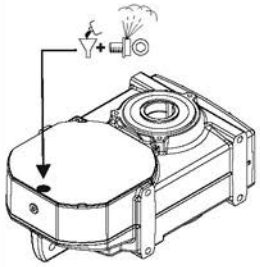
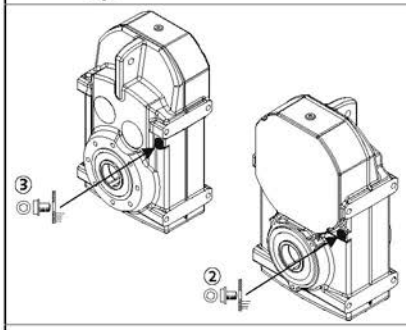	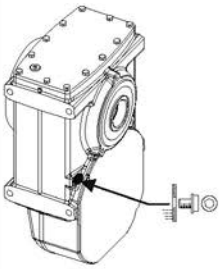	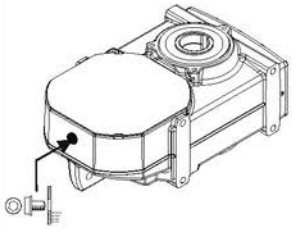
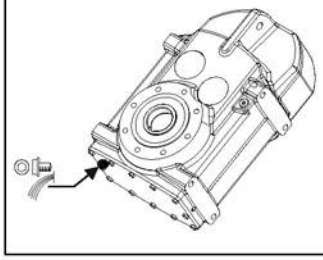		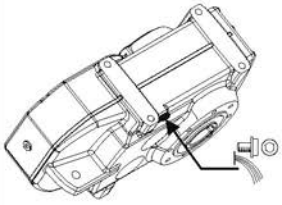

	Filling		Drain	②	2-stage
	Breathing		Control	③	3-stage

6.4

Ventilation

Position of ventilation, sealing elements and oil level check

g500-S8000 ... S19000

Mounting position D	Mounting position E	Mounting position F
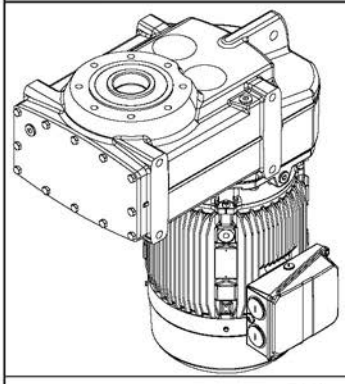	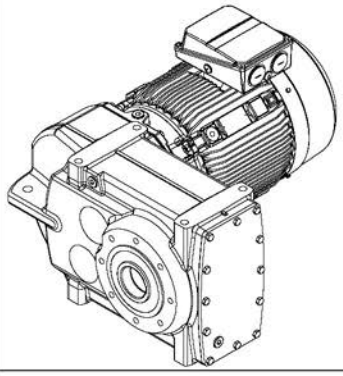	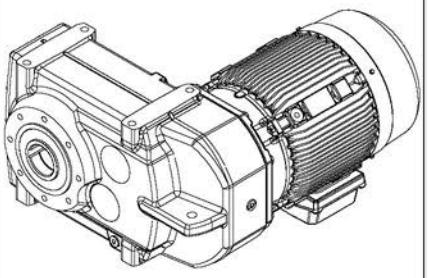
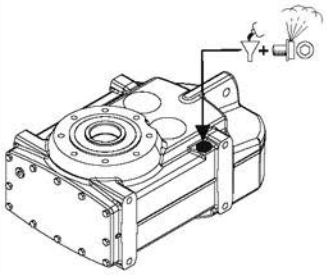	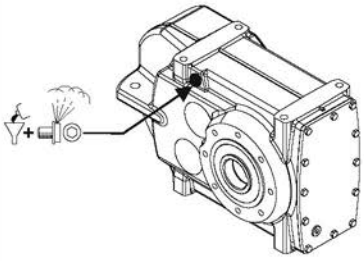	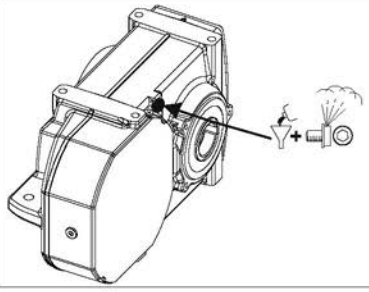
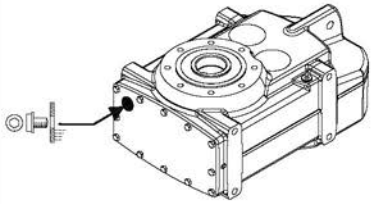	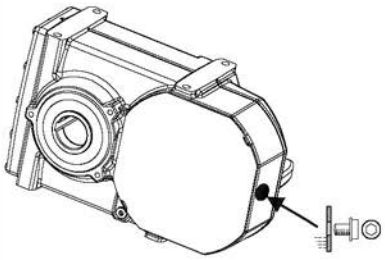	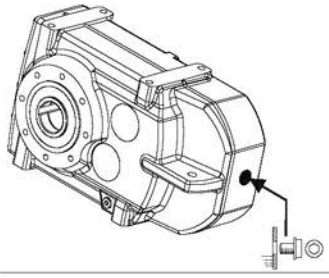
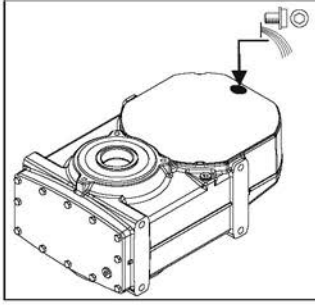	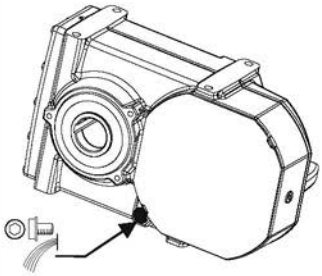	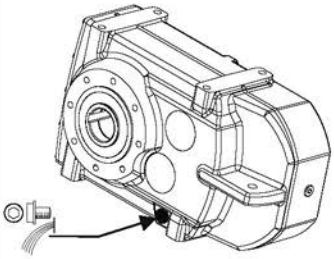

	Filling		Drain
	Breathing		Control

6.4

Standards and operating conditions

Geared motor data

Product					
Motor			MD□MA□□	m550	m540
Degree of protection					
EN 60529			IP55 [1] IP65 [1, 3] IP66 [1, 3]		IP55 [1] IP65 [1]
Energy efficiency class					
IEC 60034-30			IE1	IE3	
IEC 60034-2-1			Methodology for measuring efficiency		
10 CFR Part 431 (U.S. Integral hp Rule)				Table 5 (Premium Efficiency), CC127B	
GB18613-2012 (China Energy Label optional)				Grade 2	
Conformity					
CE			Low-Voltage Directive		
			2006/95/EC	2014/35/EU	
EAC			TP TC 004/2011 (TR CU 004/2011)		
Approval					
CCC			GB Standard 12350-2009		
CSA			CSA 22.2 No. 100		
cURus			UL 1004-1 UL 1004-8 File-No. E210321		UL 1004-1 File-No. E210321
Temperature class					
IEC/EN 60034-1; utilisation			B		
IEC/EN 60034-1; insulation system (enamel-insulated wire)			F		
Min. ambient operating temperature					
	$T_{opr,min}$	[°C]	-20		
Max. ambient temperature for operation					
	$T_{opr,max}$	[°C]	40		
With power reduction	$T_{opr,max}$	[°C]	60 [2]		
Site altitude					
Current derating at over 1000 m		[%/1000 m]	5.00		
Amsl	H_{max}	[m]	4000		

[1] Designs with different degrees of protection:
IP55 with brake (IP54 with manual release lever).
IP54 with resolver RS1.
IP54 with HTL incremental encoder IG128-24V-H.
[2] In case of cURus max. 40 °C are permissible.
[3] m550 on request.

► In the European Union, the ErP Directive stipulates minimum efficiency levels for three-phase AC motors. Geared three-phase AC motors that do not conform with this Directive do not meet CE requirements and must not be marketed in the European Economic Area. For further information about the ErP Directive, the efficiency regulations in other countries and the Lenze products concerned, please refer to the brochure "International efficiency directives for three-phase AC motors".

Permissible radial and axial forces at output

Permissible radial force

$F_{rad,perm} = f_w \times F_{rad,max}$

► If F_{rad} **and** $F_{ax} \neq 0$, please contact Lenze.

Permissible axial force

If there is no radial force, the maximum permissible axial force is 50 % of the table value $F_{rad,max}$

Application of forces

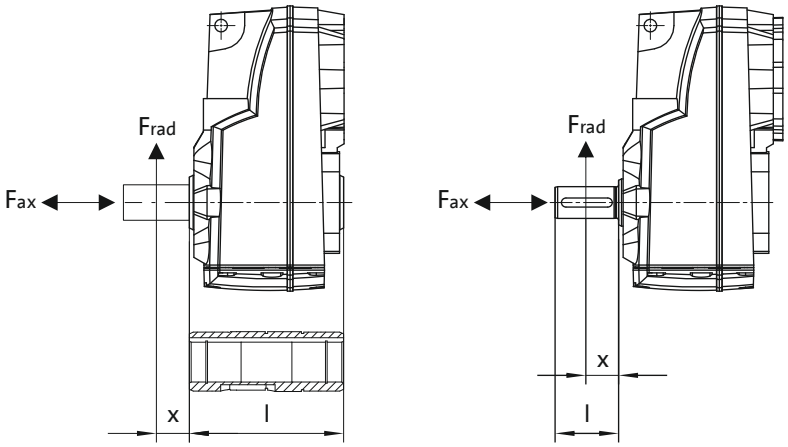

Additional load factor f_w at output shaft

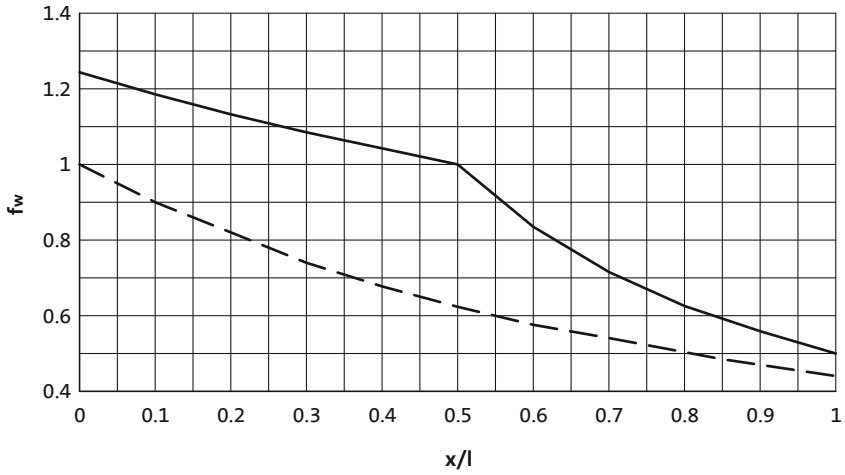

6.4

——— Solid shaft
— — — Hollow shaft

Permissible radial and axial forces at output

The values given in the table refer to the center shaft end force application point and are minimum values calculated according to the most unfavourable conditions (force application angle, mounting position, direction of rotation). The values were calculated for the motor/gearbox combination with a load capacity of c= 1.3 and an input speed of 1400 rpm.

In case of different operating conditions, considerably higher forces can be transmitted. Please contact Lenze.

► A hollow shaft with shrink disc requires a check by Lenze.

Product	n_2 [r/min]						
	250	160	100	63	40	25	≤16
	Max. radial force, Hollow shaft						
	$F_{rad,max}$ [N]	$F_{rad,max}$ [N]	$F_{rad,max}$ [N]	$F_{rad,max}$ [N]	$F_{rad,max}$ [N]	$F_{rad,max}$ [N]	$F_{rad,max}$ [N]
g500-S130	1500	1650	2200	2750	3450	4200	4500
g500-S220	3200	3800	4600	5500	6300	7000	7000
g500-S400	3400	4100	5000	6000	7100	8000	8000
g500-S660	4000	5000	6600	8500	10800	12000	12000
g500-S950	5000	6000	8000	10300	11500	12500	13000
g500-S2100	6500	7500	10000	12000	15700	15700	16000
g500-S3100	8000	9000	12500	15000	17000	19800	19800
g500-S4500	17500	19000	20000	23000	30000	30000	30000
g500-S8000	23000	27000	30000	38000	48000	55000	65000
g500-S14000	34000	41000	44000	55000	65000	73500	73500
g500-S19000		55000	61000	74000	91000	100000	111000

	Max. radial force, Solid shaft without flange						
	$F_{rad,max}$ [N]	$F_{rad,max}$ [N]	$F_{rad,max}$ [N]	$F_{rad,max}$ [N]	$F_{rad,max}$ [N]	$F_{rad,max}$ [N]	$F_{rad,max}$ [N]
g500-S130	1500	1650	2200	2750	3450	4200	4500
g500-S220	2700	3200	3600	3600	3600	3600	3600
g500-S400	2700	3200	4000	4800	5800	6200	6200
g500-S660	3600	3900	5100	6500	8400	9000	9000
g500-S950	9500	10300	10300	10300	10300	10300	10300
g500-S2100	11500	13600	15700	15700	15700	15700	15700
g500-S3100	14500	16500	18000	19800	19800	19800	19800
g500-S4500	18500	20000	22000	25000	30000	30000	30000
g500-S8000	27000	31000	35000	43000	52000	59000	65000
g500-S14000	36000	42000	47000	57000	66000	73500	73500
g500-S19000		49000	54000	65000	79000	100000	111000

Permissible radial and axial forces at output

Product	n_2 [r/min]						
	250	160	100	63	40	25	≤16
	Max. radial force, Solid shaft with flange						
	$F_{rad,max}$ [N]	$F_{rad,max}$ [N]	$F_{rad,max}$ [N]	$F_{rad,max}$ [N]	$F_{rad,max}$ [N]	$F_{rad,max}$ [N]	$F_{rad,max}$ [N]
g500-S130	1500	1650	2200	2750	3450	4200	4500
g500-S220	3700	4400	4600	4600	4600	4600	4600
g500-S400	5100	5900	6800	7000	7000	7000	7000
g500-S660	7000	7800	9600	10000	10000	10000	10000
g500-S950	7500	8500	10300	10300	10300	10300	10300
g500-S2100	11500	13600	15700	15700	15700	15700	15700
g500-S3100	19800	19800	19800	19800	19800	19800	19800
g500-S4500	27000	28000	30000	30000	30000	30000	30000
g500-S8000	27000	31000	35000	43000	52000	59000	71500
g500-S14000	36000	42000	47000	57000	66000	77000	81000
g500-S19000		49000	54000	65000	79000	100000	118000

Selection tables, notes

Notes on the selection tables with 4-pole motors

The selection tables show the available combinations of gearbox type, number of stages, ratio and motor. They are used only to provide basic orientation.
The following legend indicates the structure of the selection tables.

Rated power Prated of the drive motor depending on the rated frequency

50 Hz: P_N = 0.75 kW
87 Hz: P_N = 1.35 kW

2-stufige Getriebe ← **Number of the gear stage of the gearbox**

Torque diagram

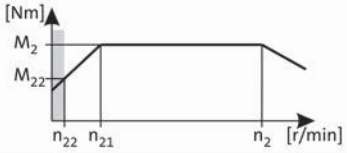

Mains operation 400 V, 50 Hz			Inverter operation 5 Hz -		- 20 Hz		- 50 Hz (1:10)			- 87 Hz (1:17.4)			i	Product		
n_2 [r/min]	M_2 [Nm]	c	n_{22} [r/min]	M_{22} [Nm]	n_{21} [r/min]	M_2 [Nm]	n_2 [r/min]	M_2 [Nm]	c	n_2 [r/min]	M_2 [Nm]	c		g500	m5□□	
396	18	3.6	40	14	164	18	396	18	3.6	699	18	3.0	3.661	-S130	50-P80/M4	
289	24	3.2	29	19	120	24	289	24	3.2	510	25	2.6	5.021	-S130	50-P80/M4	

Product Gearbox **Product Motor** **Ratio i** **Page number for dimensions**

Load capacity c of the gearbox
c is the ratio between the permissible rated torque of the gearbox and the rated torque of the three-phase AC motor (converted to the driven shaft).
c must be always higher than the service factor **k** determined for the application **k**.

$$c = \frac{M_{2,zul}}{M_{1N} \cdot i \cdot \eta_{Getr}} > k$$

Mains operation
Output speed **n2**
Output torque **M2**

Inverter operation
The speed and torque data are valid for self-ventilated and forced ventilated drives. Forced ventilated drives can always output the torque **M2** in the entire setting ranges. In the case of self-ventilated drives, a reduction to **M22** is required in the lower speed range.

Motor voltages

The power values and torques indicated in the selection tables refer to the following motor voltages:
- 50 Hz : Δ 230 V / Y 400 V
- 87 Hz : 400 V

Operation at 87 Hz

In 87 Hz operation, the three-phase AC motor (which is designed for a voltage of Δ 230 V / Y 400 V at 50 Hz) is operated on an inverter with 400 V rated voltage in a delta connection. It is important to note here that the inverter must be configured for 87Hz output.
This offers the following advantages over 50 Hz operation:
- the setting range of the motor is increased by a factor of 1.73.
- the motor can then provide around 1.73 times greater output, which in turn allows a smaller and more affordable motor to be selected for the application.
- the efficiency of the motor is also improved.

Selection tables, 4-pole motors

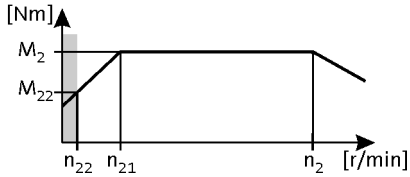

50 Hz: P_N = 0.12 kW
87 Hz: P_N = 0.21 kW

2-stage gearboxes

Mains operation 400 V, 50 Hz			Inverter operation 5 Hz -		- 20 Hz		- 50 Hz (1:10)			- 87 Hz (1:17.4)			i	Product		
n_2 [r/min]	M_2 [Nm]	c	n_{22} [r/min]	M_{22} [Nm]	n_{21} [r/min]	M_2 [Nm]	n_2 [r/min]	M_2 [Nm]	c	n_2 [r/min]	M_2 [Nm]	c		g500	MD□MA□□	
45	24	5.3	4.6	19	19	24	45	24	5.3	81	24	5.4	31.387	-S130	063-12	
40	28	4.7	4.1	21	17	27	40	28	4.7	71	27	4.8	35.493	-S130	063-12	
35	32	4.1	3.6	24	15	31	35	32	4.1	63	31	4.2	40.422	-S130	063-12	
34	33	4.6	3.4	26	14	33	34	33	4.6	60	33	4.7	42.533	-S220	063-12	
31	36	3.7	3.2	28	13	35	31	36	3.7	56	35	3.7	45.711	-S130	063-12	
30	37	4.6	3.1	28	13	36	30	37	4.6	54	36	4.7	46.933	-S400	063-12	
30	38	4.6	3.0	29	13	37	30	38	4.6	53	37	4.7	48.190	-S220	063-12	
28	40	3.3	2.8	31	12	39	28	40	3.3	50	39	3.3	51.230	-S130	063-12	
28	40	4.0	2.8	31	12	40	28	40	4.0	49	40	4.1	51.620	-S220	063-12	
27	41	4.6	2.7	32	11	41	27	41	4.6	48	41	4.7	53.026	-S400	063-12	
25	44	4.0	2.5	34	11	44	25	44	4.0	45	44	4.1	56.960	-S400	063-12	
25	45	2.9	2.5	35	10	44	25	45	2.9	44	44	2.9	57.933	-S130	063-12	
24	46	4.0	2.5	35	10	45	24	46	4.0	43	45	4.1	58.486	-S220	063-12	
22	50	2.6	2.3	39	9.3	49	22	50	2.6	40	49	2.6	64.200	-S130	063-12	
22	50	4.0	2.3	39	9.3	49	22	50	4.0	39	49	4.1	64.354	-S400	063-12	
22	51	3.1	2.2	40	9.1	51	22	51	3.1	38	51	3.2	65.975	-S220	063-12	
20	57	2.3	2.0	44	8.3	56	20	57	2.3	35	56	2.3	72.600	-S130	063-12	
19	58	3.1	1.9	45	8.0	57	19	58	3.1	34	57	3.2	74.750	-S220	063-12	
17	66	1.6	1.7	51	7.1	65	17	66	1.6	30	65	1.6	84.581	-S130	063-12	
15	75	1.5	1.5	58	6.3	73	15	75	1.5	27	73	1.6	95.648	-S130	063-12	

3-stage gearboxes

Mains operation 400 V, 50 Hz			Inverter operation 5 Hz -		- 20 Hz		- 50 Hz (1:10)			- 87 Hz (1:17.4)			i	Product		
n_2 [r/min]	M_2 [Nm]	c	n_{22} [r/min]	M_{22} [Nm]	n_{21} [r/min]	M_2 [Nm]	n_2 [r/min]	M_2 [Nm]	c	n_2 [r/min]	M_2 [Nm]	c		g500	MD□MA□□	
27	40	5.4	2.8	31	11	40	27	40	5.4	48	40	5.3	52.587	-S220	063-12	
24	46	4.8	2.4	35	10	45	24	46	4.8	43	45	4.7	59.581	-S220	063-12	
21	52	4.3	2.2	40	8.9	51	21	52	4.3	38	51	4.1	67.298	-S220	063-12	
19	59	3.8	1.9	45	7.9	58	19	59	3.8	33	58	3.8	76.249	-S220	063-12	
17	66	3.3	1.7	51	7.0	65	17	66	3.3	29	65	3.4	86.079	-S220	063-12	
15	73	5.5	1.5	56	6.3	72	15	73	5.5	27	72	5.6	94.984	-S400	063-12	
15	75	2.9	1.5	58	6.2	74	15	75	2.9	26	74	3.0	97.528	-S220	063-12	
13	82	4.8	1.4	64	5.6	81	13	82	4.8	24	81	4.9	107.314	-S400	063-12	
13	86	2.6	1.3	66	5.4	84	13	86	2.6	23	84	2.6	111.747	-S220	063-12	
12	95	4.2	1.2	73	4.9	93	12	95	4.2	21	93	4.3	123.307	-S400	063-12	
11	97	2.3	1.1	75	4.7	96	11	97	2.3	20	96	2.3	126.610	-S220	063-12	
10	105	5.5	1.1	81	4.4	104	10	105	5.5	19	104	5.6	137.133	-S660	063-12	
10	107	3.7	1.0	82	4.3	105	10	107	3.7	18	105	3.8	139.313	-S400	063-12	
10	110	2.0	1.0	85	4.2	108	10	110	2.0	18	108	2.0	143.205	-S220	063-12	
9.1	120	5.5	0.9	93	3.8	118	9.1	120	5.5	16	118	5.6	156.249	-S660	063-12	

Selection tables, 4-pole motors

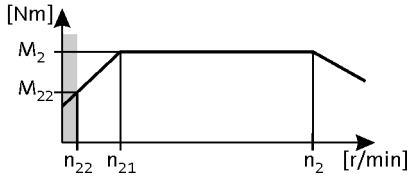

50 Hz: P_N = 0.12 kW
87 Hz: P_N = 0.21 kW

3-stage gearboxes

Mains operation 400 V, 50 Hz			Inverter operation 5 Hz -		- 20 Hz		- 50 Hz (1:10)			- 87 Hz (1:17.4)			i	Product		
n_2 [r/min]	M_2 [Nm]	c	n_{22} [r/min]	M_{22} [Nm]	n_{21} [r/min]	M_2 [Nm]	n_2 [r/min]	M_2 [Nm]	c	n_2 [r/min]	M_2 [Nm]	c		g500	MD□MA□□	
9.0	121	3.3	0.9	94	3.8	119	9.0	121	3.3	16	119	3.3	158.019	-S400	063-12	
8.8	125	1.8	0.9	96	3.7	123	8.8	125	1.8	16	123	1.8	162.252	-S220	063-12	
8.1	136	4.6	0.8	105	3.4	134	8.1	136	4.6	14	134	4.7	176.611	-S660	063-12	
8.0	137	2.9	0.8	106	3.4	135	8.0	137	2.9	14	135	3.0	178.531	-S400	063-12	
7.7	142	1.6	0.8	110	3.2	140	7.7	142	1.6	14	140	1.6	185.248	-S220	063-12	
7.1	155	4.3	0.7	119	3.0	152	7.1	155	4.3	13	152	4.3	201.230	-S660	063-12	
7.0	157	2.6	0.7	121	2.9	155	7.0	157	2.6	12	155	2.6	204.412	-S400	063-12	
6.8	161	1.4	0.7	124	2.9	159	6.8	161	1.4	12	159	1.4	209.887	-S220	063-12	
6.4	172	3.8	0.6	133	2.7	169	6.4	172	3.8	11	169	3.9	223.833	-S660	063-12	
6.2	176	4.6	0.6	136	2.6	173	6.2	176	4.6	11	173	4.7	229.289	-S950	063-12	
6.2	177	2.2	0.6	137	2.6	175	6.2	177	2.2	11	175	2.3	230.946	-S400	063-12	
5.9	185	1.2	0.6	143	2.5	182	5.9	185	1.2	11	182	1.2	241.022	-S220	063-12	
5.6	196	3.4	0.6	151	2.4	193	5.6	196	3.4	9.9	193	3.4	255.034	-S660	063-12	
5.6	197	4.6	0.6	152	2.3	194	5.6	197	4.6	9.9	194	4.7	256.585	-S950	063-12	
5.4	204	1.9	0.5	157	2.3	201	5.4	204	1.9	9.5	201	1.9	265.956	-S400	063-12	
5.2	210	1.1	0.5	162	2.2	206	5.2	210	1.1	9.3	206	1.1	273.079	-S220	063-12	
5.1	214	4.0	0.5	165	2.2	210	5.1	214	4.0	9.1	210	4.1	278.273	-S950	063-12	
5.1	216	2.8	0.5	166	2.1	212	5.1	216	2.8	9.0	212	2.8	280.500	-S660	063-12	
4.7	231	1.7	0.5	178	2.0	227	4.7	231	1.7	8.4	227	1.8	300.479	-S400	063-12	
4.6	239	4.0	0.5	184	1.9	235	4.6	239	4.0	8.1	235	4.0	311.401	-S950	063-12	
4.6	240	0.9	0.5	185	1.9	236	4.6	240	0.9	8.1	236	0.9	312.233	-S220	063-12	
4.5	246	2.7	0.5	189	1.9	242	4.5	246	2.7	7.9	242	2.7	319.600	-S660	063-12	
4.1	265	1.3	0.4	204	1.7	260	4.1	265	1.3	7.4	260	1.3	344.533	-S400	063-12	
4.0	272	0.8	0.4	209	1.7	267	4.0	272	0.8	7.2	267	0.8	353.762	-S220	063-12	
4.0	273	3.1	0.4	211	1.7	269	4.0	273	3.1	7.1	269	3.2	355.658	-S950	063-12	
3.9	284	1.6	0.4	219	1.6	279	3.9	284	1.6	6.9	279	1.6	369.548	-S660	063-12	
3.7	299	1.3	0.4	230	1.5	294	3.7	299	1.3	6.5	294	1.3	389.256	-S400	063-12	
3.6	306	3.1	0.4	236	1.5	301	3.6	306	3.1	6.4	301	3.2	397.999	-S950	063-12	
3.4	324	1.6	0.3	249	1.4	318	3.4	324	1.6	6.0	318	1.6	421.060	-S660	063-12	

Selection tables, 4-pole motors

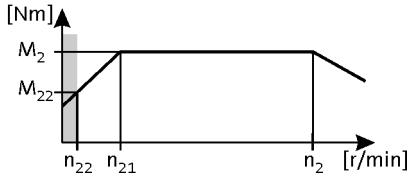

50 Hz: P_N = 0.18 kW
87 Hz: P_N = 0.33 kW

2-stage gearboxes

Mains operation 400 V, 50 Hz			Inverter operation 5 Hz -		- 20 Hz		- 50 Hz (1:10)			- 87 Hz (1:17.4)			i	Product		
n_2 [r/min]	M_2 [Nm]	c	n_{22} [r/min]	M_{22} [Nm]	n_{21} [r/min]	M_2 [Nm]	n_2 [r/min]	M_2 [Nm]	c	n_2 [r/min]	M_2 [Nm]	c		g500	MD□MA□□	
194	9.0	4.5	21	6.6	85	9.0	194	9.0	4.5	352	9.0	3.7	7.029	-S130	063-32	
85	20	4.5	9.1	15	38	20	85	20	4.5	155	20	3.7	15.979	-S130	063-32	
76	22	4.5	8.0	17	33	22	76	22	4.5	137	22	4.2	18.069	-S130	063-32	
67	25	4.1	7.1	19	29	25	67	25	4.1	121	25	3.9	20.381	-S130	063-32	
59	28	4.1	6.3	22	26	28	59	28	4.1	107	28	3.9	23.048	-S130	063-32	
44	38	3.4	4.6	30	19	38	44	38	3.4	79	39	3.4	31.387	-S130	063-32	
39	43	3.0	4.1	33	17	43	39	43	3.0	70	44	3.0	35.493	-S130	063-32	
34	49	2.6	3.6	38	15	49	34	49	2.6	61	50	2.6	40.422	-S130	063-32	
32	52	2.9	3.4	40	14	52	32	52	2.9	58	53	2.9	42.533	-S220	063-32	
30	56	2.3	3.2	43	13	56	30	56	2.3	54	56	2.3	45.711	-S130	063-32	
29	57	2.9	3.1	44	13	57	29	57	2.9	53	58	2.9	46.933	-S400	063-32	
28	59	2.9	3.0	45	13	59	28	59	2.9	51	60	2.9	48.190	-S220	063-32	
27	63	2.1	2.8	48	12	63	27	63	2.1	48	63	2.1	51.230	-S130	063-32	
26	63	2.6	2.8	49	12	63	26	63	2.6	48	64	2.5	51.620	-S220	063-32	
26	65	2.9	2.7	50	11	65	26	65	2.9	47	66	2.9	53.026	-S400	063-32	
24	70	2.6	2.5	54	11	70	24	70	2.6	44	70	2.5	56.960	-S400	063-32	
24	71	1.8	2.5	55	10	71	24	71	1.8	43	72	1.8	57.933	-S130	063-32	
23	71	2.6	2.5	55	10	71	23	71	2.6	42	72	2.5	58.486	-S220	063-32	
21	78	1.7	2.3	60	9.3	78	21	78	1.7	39	79	1.6	64.200	-S130	063-32	
21	79	2.6	2.3	61	9.3	79	21	79	2.6	39	79	2.5	64.354	-S400	063-32	
21	81	2.0	2.2	62	9.1	81	21	81	2.0	38	82	2.0	65.975	-S220	063-32	
19	89	1.5	2.0	68	8.3	89	19	89	1.5	34	90	1.5	72.600	-S130	063-32	
18	91	2.0	1.9	70	8.0	91	18	91	2.0	33	92	2.0	74.750	-S220	063-32	
16	103	1.0	1.7	80	7.1	103	16	103	1.0	29	104	1.0	84.581	-S130	063-32	
14	117	1.0	1.5	90	6.3	117	14	117	1.0	26	118	1.0	95.648	-S130	063-32	

3-stage gearboxes

Mains operation 400 V, 50 Hz			Inverter operation 5 Hz -		- 20 Hz		- 50 Hz (1:10)			- 87 Hz (1:17.4)			i	Product		
n_2 [r/min]	M_2 [Nm]	c	n_{22} [r/min]	M_{22} [Nm]	n_{21} [r/min]	M_2 [Nm]	n_2 [r/min]	M_2 [Nm]	c	n_2 [r/min]	M_2 [Nm]	c		g500	MD□MA□□	
34	48	4.6	3.6	37	15	48	34	48	4.6	62	49	3.8	40.012	-S220	063-32	
30	55	4.0	3.2	42	13	55	30	55	4.0	55	55	3.4	45.333	-S220	063-32	
26	63	3.5	2.8	49	11	63	26	63	3.5	47	64	3.3	52.587	-S220	063-32	
24	70	4.5	2.5	54	10	70	24	70	4.5	43	71	4.2	58.027	-S400	063-32	
23	72	3.1	2.4	55	10	72	23	72	3.1	42	72	2.9	59.581	-S220	063-32	
21	79	4.5	2.2	61	9.2	79	21	79	4.5	38	80	4.2	65.559	-S400	063-32	
20	81	2.7	2.2	62	8.9	81	20	81	2.7	37	82	2.6	67.298	-S220	063-32	
20	84	4.5	2.1	65	8.6	84	20	84	4.5	36	85	4.2	69.813	-S660	063-32	
18	89	4.1	2.0	69	8.1	89	18	89	4.1	33	90	4.1	74.260	-S400	063-32	
18	92	2.4	1.9	71	7.9	92	18	92	2.4	33	93	2.4	76.249	-S220	063-32	

Selection tables, 4-pole motors

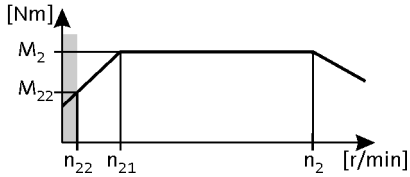

50 Hz: P_N = 0.18 kW
87 Hz: P_N = 0.33 kW

3-stage gearboxes

Mains operation 400 V, 50 Hz			Inverter operation 5 Hz -		- 20 Hz		- 50 Hz (1:10)			- 87 Hz (1:17.4)			i	Product		
n_2 [r/min]	M_2 [Nm]	c	n_{22} [r/min]	M_{22} [Nm]	n_{21} [r/min]	M_2 [Nm]	n_2 [r/min]	M_2 [Nm]	c	n_2 [r/min]	M_2 [Nm]	c		g500	MD□MA□□	
17	96	4.5	1.8	74	7.5	96	17	96	4.5	31	97	4.4	79.545	-S660	063-32	
16	101	4.0	1.7	78	7.2	101	16	101	4.0	30	102	3.9	83.900	-S400	063-32	
16	104	2.1	1.7	80	7.0	104	16	104	2.1	29	105	2.1	86.079	-S220	063-32	
15	107	4.1	1.6	83	6.7	107	15	107	4.1	28	108	4.1	89.048	-S660	063-32	
14	114	3.5	1.5	88	6.3	114	14	114	3.5	26	116	3.5	94.984	-S400	063-32	
14	117	1.9	1.5	90	6.2	117	14	117	1.9	25	119	1.9	97.528	-S220	063-32	
14	122	4.1	1.4	94	5.9	122	14	122	4.1	24	123	4.1	101.460	-S660	063-32	
13	129	3.1	1.4	99	5.6	129	13	129	3.1	23	131	3.1	107.314	-S400	063-32	
12	134	1.6	1.3	104	5.4	134	12	134	1.6	22	136	1.6	111.747	-S220	063-32	
11	148	2.7	1.2	114	4.9	148	11	148	2.7	20	150	2.7	123.307	-S400	063-32	
11	152	1.4	1.1	117	4.7	152	11	152	1.4	20	154	1.4	126.610	-S220	063-32	
10	165	3.5	1.1	127	4.4	165	10	165	3.5	18	167	3.5	137.133	-S660	063-32	
9.8	168	2.4	1.0	129	4.3	168	9.8	168	2.4	18	170	2.4	139.313	-S400	063-32	
9.5	172	1.3	1.0	133	4.2	172	9.5	172	1.3	17	174	1.3	143.205	-S220	063-32	
8.7	188	3.5	0.9	145	3.8	188	8.7	188	3.5	16	190	3.5	156.249	-S660	063-32	
8.6	190	2.1	0.9	146	3.8	190	8.6	190	2.1	16	192	2.1	158.019	-S400	063-32	
8.4	195	1.1	0.9	150	3.7	195	8.4	195	1.1	15	197	1.1	162.252	-S220	063-32	
7.7	213	2.9	0.8	164	3.4	213	7.7	213	2.9	14	215	2.9	176.611	-S660	063-32	
7.6	215	1.9	0.8	165	3.4	215	7.6	215	1.9	14	217	1.8	178.531	-S400	063-32	
7.4	223	1.0	0.8	172	3.2	223	7.4	223	1.0	13	225	1.0	185.248	-S220	063-32	
6.8	242	2.7	0.7	187	3.0	242	6.8	242	2.7	12	245	2.7	201.230	-S660	063-32	
6.7	246	1.6	0.7	189	2.9	246	6.7	246	1.6	12	249	1.6	204.412	-S400	063-32	
6.5	253	0.9	0.7	195	2.9	253	6.5	253	0.9	12	255	0.9	209.887	-S220	063-32	
6.1	269	2.5	0.6	207	2.7	269	6.1	269	2.5	11	272	2.4	223.833	-S660	063-32	
6.0	276	2.9	0.6	213	2.6	276	6.0	276	2.9	11	279	2.9	229.289	-S950	063-32	
5.9	278	1.4	0.6	214	2.6	278	5.9	278	1.4	11	281	1.4	230.946	-S400	063-32	
5.4	307	2.2	0.6	236	2.4	307	5.4	307	2.2	9.7	310	2.1	255.034	-S660	063-32	
5.3	309	2.9	0.6	238	2.3	309	5.3	309	2.9	9.6	312	2.9	256.585	-S950	063-32	
5.1	320	1.2	0.5	246	2.3	320	5.1	320	1.2	9.3	324	1.2	265.956	-S400	063-32	
4.9	335	2.6	0.5	258	2.2	335	4.9	335	2.6	8.9	339	2.5	278.273	-S950	063-32	
4.9	338	1.8	0.5	260	2.1	338	4.9	338	1.8	8.8	341	1.8	280.500	-S660	063-32	
4.5	362	1.1	0.5	278	2.0	362	4.5	362	1.1	8.2	366	1.1	300.479	-S400	063-32	
4.4	375	2.5	0.5	289	1.9	375	4.4	375	2.5	7.9	379	2.5	311.401	-S950	063-32	
4.3	385	1.7	0.5	296	1.9	385	4.3	385	1.7	7.7	389	1.7	319.600	-S660	063-32	
3.8	428	2.0	0.4	330	1.7	428	3.8	428	2.0	7.0	433	2.0	355.658	-S950	063-32	

Selection tables, 4-pole motors

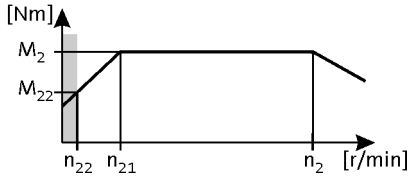

50 Hz: P_N = 0.18 kW
87 Hz: P_N = 0.33 kW

3-stage gearboxes

Mains operation 400 V, 50 Hz			Inverter operation 5 Hz -		- 20 Hz		- 50 Hz (1:10)			- 87 Hz (1:17.4)			i	Product		
n_2 [r/min]	M_2 [Nm]	c	n_{22} [r/min]	M_{22} [Nm]	n_{21} [r/min]	M_2 [Nm]	n_2 [r/min]	M_2 [Nm]	c	n_2 [r/min]	M_2 [Nm]	c		g500	MD□MA□□	
3.7	445	1.0	0.4	342	1.6	445	3.7	445	1.0	6.7	450	1.0	369.548	-S660	063-32	
3.4	479	2.0	0.4	369	1.5	479	3.4	479	2.0	6.2	484	2.0	397.999	-S950	063-32	
3.2	507	1.0	0.3	390	1.4	507	3.2	507	1.0	5.9	512	1.0	421.060	-S660	063-32	

Selection tables, 4-pole motors

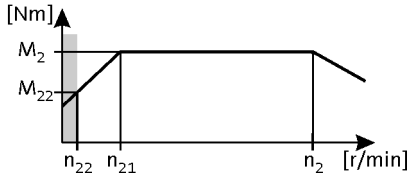

50 Hz: P_N = 0.25 kW
87 Hz: P_N = 0.45 kW

2-stage gearboxes

Mains operation 400 V, 50 Hz			Inverter operation 5 Hz -		- 20 Hz		- 50 Hz (1:10)			- 87 Hz (1:17.4)			i	Product		
n_2 [r/min]	M_2 [Nm]	c	n_{22} [r/min]	M_{22} [Nm]	n_{21} [r/min]	M_2 [Nm]	n_2 [r/min]	M_2 [Nm]	c	n_2 [r/min]	M_2 [Nm]	c		g500	MD□MA□□	
374	6.0	5.6	40	4.8	164	6.0	374	6.0	5.6	677	6.0	4.8	3.661	-S130	063-42	
273	8.0	5.6	29	6.5	120	8.0	273	8.0	5.6	494	8.0	4.8	5.021	-S130	063-42	
214	11	5.6	23	8.3	94	11	214	11	5.6	387	11	4.8	6.411	-S400	063-42	
213	11	5.2	23	8.4	93	11	213	11	5.2	386	11	4.4	6.425	-S130	063-42	
195	12	5.2	21	9.2	85	12	195	12	5.2	353	12	4.4	7.029	-S130	063-42	
165	14	5.6	17	11	72	14	165	14	5.6	298	14	4.8	8.322	-S130	063-42	
146	16	5.6	15	12	64	16	146	16	5.6	264	16	4.8	9.411	-S130	063-42	
120	19	5.6	13	15	53	19	120	19	5.6	217	19	4.8	11.413	-S130	063-42	
106	22	5.6	11	17	47	22	106	22	5.6	192	22	4.8	12.907	-S130	063-42	
105	22	5.6	11	17	46	22	105	22	5.6	191	22	4.8	12.992	-S220	063-42	
96	24	5.6	10	19	42	24	96	24	5.6	173	24	4.8	14.336	-S400	063-42	
94	25	5.2	9.9	19	41	25	94	25	5.2	170	25	4.4	14.606	-S130	063-42	
93	25	5.6	9.9	19	41	25	93	25	5.6	169	25	4.8	14.720	-S220	063-42	
86	27	4.8	9.1	21	38	27	86	27	4.8	155	27	4.1	15.979	-S130	063-42	
85	27	5.6	9.0	21	37	27	85	27	5.6	153	27	4.8	16.197	-S400	063-42	
83	28	5.2	8.8	22	36	28	83	28	5.2	150	28	4.4	16.571	-S220	063-42	
76	31	4.3	8.0	24	33	30	76	31	4.3	137	30	4.1	18.069	-S130	063-42	
75	31	5.2	7.9	24	33	31	75	31	5.2	136	31	5.1	18.286	-S400	063-42	
73	32	5.2	7.7	24	32	32	73	32	5.2	132	32	5.1	18.776	-S220	063-42	
67	34	3.8	7.1	27	29	34	67	34	3.8	122	34	3.7	20.381	-S130	063-42	
66	35	5.2	7.0	27	29	35	66	35	5.2	120	35	5.1	20.659	-S400	063-42	
59	39	3.3	6.3	30	26	39	59	39	3.3	108	39	3.2	23.048	-S130	063-42	
55	42	3.1	5.8	33	24	42	55	42	3.1	99	42	3.0	24.967	-S130	063-42	
52	45	4.3	5.5	34	23	44	52	45	4.3	94	44	4.2	26.422	-S220	063-42	
49	48	2.7	5.1	37	21	47	49	48	2.7	88	47	2.6	28.233	-S130	063-42	
47	49	4.3	5.0	38	21	49	47	49	4.3	85	49	4.2	29.156	-S400	063-42	
46	51	4.3	4.8	39	20	50	46	51	4.3	83	50	4.2	29.937	-S220	063-42	
44	53	2.5	4.6	41	19	53	44	53	2.5	79	53	2.5	31.387	-S130	063-42	
42	56	3.7	4.4	43	18	55	42	56	3.7	76	55	3.7	32.867	-S220	063-42	
42	56	4.3	4.4	43	18	55	42	56	4.3	75	55	4.3	32.940	-S400	063-42	
39	60	2.2	4.1	46	17	60	39	60	2.2	70	60	2.2	35.493	-S130	063-42	
38	61	3.7	4.0	47	17	61	38	61	3.7	68	61	3.7	36.267	-S400	063-42	
37	63	3.5	3.9	49	16	63	37	63	3.5	67	63	3.5	37.238	-S220	063-42	
34	68	3.7	3.6	53	15	68	34	68	3.7	62	68	3.7	40.333	-S660	063-42	
34	68	1.9	3.6	53	15	68	34	68	1.9	61	68	1.9	40.422	-S130	063-42	

Selection tables, 4-pole motors

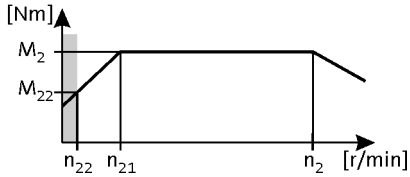

50 Hz: P_N = 0.25 kW
87 Hz: P_N = 0.45 kW

2-stage gearboxes

Mains operation 400 V, 50 Hz			Inverter operation 5 Hz -		- 20 Hz		- 50 Hz (1:10)			- 87 Hz (1:17.4)			i	Product		
n_2 [r/min]	M_2 [Nm]	c	n_{22} [r/min]	M_{22} [Nm]	n_{21} [r/min]	M_2 [Nm]	n_2 [r/min]	M_2 [Nm]	c	n_2 [r/min]	M_2 [Nm]	c		g500	MD□MA□□	
33	69	3.7	3.5	53	15	69	33	69	3.7	61	69	3.7	40.974	-S400	063-42	
32	72	3.1	3.4	55	14	72	32	72	3.1	58	72	3.1	42.533	-S220	063-42	
30	77	1.7	3.2	60	13	77	30	77	1.7	54	77	1.7	45.711	-S130	063-42	
30	78	3.7	3.2	60	13	77	30	78	3.7	54	77	3.7	45.956	-S660	063-42	
29	79	3.3	3.1	61	13	79	29	79	3.3	53	79	3.3	46.933	-S400	063-42	
28	81	2.7	3.0	63	13	81	28	81	2.7	52	81	2.7	48.190	-S220	063-42	
28	83	3.2	3.0	64	12	82	28	83	3.2	51	82	3.2	48.950	-S660	063-42	
27	87	1.5	2.8	67	12	86	27	87	1.5	48	86	1.5	51.230	-S130	063-42	
27	87	2.5	2.8	67	12	87	27	87	2.5	48	87	2.5	51.620	-S220	063-42	
26	90	3.3	2.7	69	11	89	26	90	3.3	47	89	3.3	53.026	-S400	063-42	
25	94	3.2	2.6	73	11	94	25	94	3.2	45	94	3.2	55.773	-S660	063-42	
24	96	2.8	2.5	74	11	96	24	96	2.8	44	96	2.8	56.960	-S400	063-42	
24	98	1.3	2.5	75	10	97	24	98	1.3	43	97	1.3	57.933	-S130	063-42	
23	99	2.2	2.5	76	10	98	23	99	2.2	42	98	2.2	58.486	-S220	063-42	
21	109	1.2	2.3	84	9.3	108	21	109	1.2	39	108	1.2	64.200	-S130	063-42	
21	109	2.8	2.3	84	9.3	108	21	109	2.8	39	108	2.8	64.354	-S400	063-42	
21	112	1.4	2.2	86	9.1	111	21	112	1.4	38	111	1.4	65.975	-S220	063-42	
19	123	1.1	2.0	95	8.3	122	19	123	1.1	34	122	1.1	72.600	-S130	063-42	
18	126	1.4	1.9	97	8.0	126	18	126	1.4	33	126	1.4	74.750	-S220	063-42	

3-stage gearboxes

Mains operation 400 V, 50 Hz			Inverter operation 5 Hz -		- 20 Hz		- 50 Hz (1:10)			- 87 Hz (1:17.4)			i	Product		
n_2 [r/min]	M_2 [Nm]	c	n_{22} [r/min]	M_{22} [Nm]	n_{21} [r/min]	M_2 [Nm]	n_2 [r/min]	M_2 [Nm]	c	n_2 [r/min]	M_2 [Nm]	c		g500	MD□MA□□	
34	67	3.3	3.6	51	15	66	34	67	3.3	62	66	2.8	40.012	-S220	063-42	
30	75	2.9	3.2	58	13	75	30	75	2.9	55	75	2.5	45.333	-S220	063-42	
28	83	5.6	2.9	64	12	83	28	83	5.6	50	83	5.4	49.867	-S660	063-42	
26	88	2.5	2.8	67	11	87	26	88	2.5	47	87	2.4	52.587	-S220	063-42	
24	95	5.6	2.6	73	11	94	24	95	5.6	44	94	5.4	56.818	-S660	063-42	
24	97	4.1	2.5	74	10	96	24	97	4.1	43	96	4.0	58.027	-S400	063-42	
23	99	2.2	2.4	76	10	99	23	99	2.2	42	99	2.1	59.581	-S220	063-42	
22	106	5.2	2.3	82	9.4	106	22	106	5.2	39	106	5.1	63.817	-S660	063-42	
21	109	3.7	2.2	84	9.2	109	21	109	3.7	38	109	3.5	65.559	-S400	063-42	
20	112	2.0	2.2	86	8.9	111	20	112	2.0	37	111	1.9	67.298	-S220	063-42	
20	116	5.2	2.1	90	8.6	116	20	116	5.2	36	116	5.0	69.813	-S660	063-42	
20	117	5.6	2.1	90	8.6	116	20	117	5.6	35	116	5.6	70.037	-S950	063-42	
19	121	5.2	2.0	93	8.3	120	19	121	5.2	34	120	5.3	72.713	-S660	063-42	
18	124	3.2	2.0	95	8.1	123	18	124	3.2	33	123	3.3	74.260	-S400	063-42	
18	127	1.7	1.9	98	7.9	126	18	127	1.7	33	126	1.7	76.249	-S220	063-42	
18	131	5.6	1.9	101	7.7	130	18	131	5.6	32	130	5.6	78.375	-S950	063-42	

Selection tables, 4-pole motors

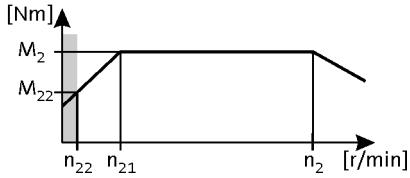

50 Hz: P_N = 0.25 kW
87 Hz: P_N = 0.45 kW

3-stage gearboxes

Mains operation 400 V, 50 Hz			Inverter operation 5 Hz -		- 20 Hz		- 50 Hz (1:10)			- 87 Hz (1:17.4)			i	Product		
n_2 [r/min]	M_2 [Nm]	c	n_{22} [r/min]	M_{22} [Nm]	n_{21} [r/min]	M_2 [Nm]	n_2 [r/min]	M_2 [Nm]	c	n_2 [r/min]	M_2 [Nm]	c		g500	MD□MA□□	
17	132	5.0	1.8	102	7.5	132	17	132	5.0	31	132	5.0	79.545	-S660	063-42	
16	140	2.9	1.7	108	7.2	139	16	140	2.9	30	139	2.9	83.900	-S400	063-42	
16	143	1.5	1.7	110	7.0	143	16	143	1.5	29	143	1.5	86.079	-S220	063-42	
15	148	4.5	1.6	114	6.7	147	15	148	4.5	28	147	4.5	89.048	-S660	063-42	
15	149	5.2	1.6	115	6.7	148	15	149	5.2	28	148	5.3	89.333	-S950	063-42	
14	158	2.5	1.5	122	6.3	157	14	158	2.5	26	157	2.5	94.984	-S400	063-42	
14	162	1.4	1.5	125	6.2	161	14	162	1.4	25	161	1.4	97.528	-S220	063-42	
14	166	5.2	1.5	128	6.0	166	14	166	5.2	25	166	5.3	99.968	-S950	063-42	
14	169	3.9	1.4	130	5.9	168	14	169	3.9	24	168	3.9	101.460	-S660	063-42	
13	179	2.2	1.4	138	5.6	178	13	179	2.2	23	178	2.3	107.314	-S400	063-42	
13	182	3.6	1.3	140	5.5	181	13	182	3.6	23	181	3.7	109.083	-S660	063-42	
12	186	1.2	1.3	143	5.4	185	12	186	1.2	22	185	1.2	111.747	-S220	063-42	
11	205	2.0	1.2	158	4.9	204	11	205	2.0	20	204	2.0	123.307	-S400	063-42	
11	207	3.2	1.2	159	4.8	206	11	207	3.2	20	206	3.2	124.289	-S660	063-42	
11	211	1.0	1.1	162	4.7	210	11	211	1.0	20	210	1.1	126.610	-S220	063-42	
10	228	2.9	1.1	176	4.4	227	10	228	2.9	18	227	2.9	137.133	-S660	063-42	
9.8	232	1.7	1.0	179	4.3	231	9.8	232	1.7	18	231	1.7	139.313	-S400	063-42	
9.6	237	4.0	1.0	183	4.2	236	9.6	237	4.0	17	236	4.0	142.437	-S950	063-42	
9.6	238	0.9	1.0	184	4.2	237	9.6	238	0.9	17	237	0.9	143.205	-S220	063-42	
8.8	260	2.5	0.9	200	3.8	259	8.8	260	2.5	16	259	2.6	156.249	-S660	063-42	
8.7	263	1.5	0.9	203	3.8	262	8.7	263	1.5	16	262	1.5	158.019	-S400	063-42	
8.6	265	3.6	0.9	204	3.8	264	8.6	265	3.6	16	264	3.6	159.394	-S950	063-42	
8.4	270	0.8	0.9	208	3.7	269	8.4	270	0.8	15	269	0.8	162.252	-S220	063-42	
7.8	294	2.2	0.8	227	3.4	292	7.8	294	2.2	14	292	2.3	176.611	-S660	063-42	
7.7	295	3.2	0.8	227	3.4	293	7.7	295	3.2	14	293	3.2	177.178	-S950	063-42	
7.7	297	1.3	0.8	229	3.4	296	7.7	297	1.3	14	296	1.4	178.531	-S400	063-42	
6.9	330	2.9	0.7	254	3.0	328	6.9	330	2.9	13	328	2.9	198.270	-S950	063-42	
6.8	335	2.0	0.7	258	3.0	333	6.8	335	2.0	12	333	2.0	201.230	-S660	063-42	
6.7	340	1.2	0.7	262	2.9	338	6.7	340	1.2	12	338	1.2	204.412	-S400	063-42	
6.1	373	1.8	0.6	287	2.7	371	6.1	373	1.8	11	371	1.8	223.833	-S660	063-42	
6.0	382	2.5	0.6	294	2.6	380	6.0	382	2.5	11	380	2.5	229.289	-S950	063-42	
5.9	385	1.0	0.6	296	2.6	382	5.9	385	1.0	11	382	1.0	230.946	-S400	063-42	
5.4	419	3.7	0.6	323	2.4	417	5.4	419	3.7	9.8	417	3.7	251.778	-S2100	063-42	
5.4	425	1.6	0.6	327	2.4	422	5.4	425	1.6	9.7	422	1.6	255.034	-S660	063-42	
5.3	427	2.2	0.6	329	2.3	425	5.3	427	2.2	9.7	425	2.2	256.585	-S950	063-42	

Selection tables, 4-pole motors

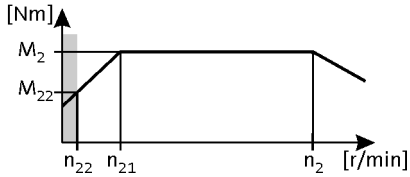

50 Hz: P_N = 0.25 kW
87 Hz: P_N = 0.45 kW

3-stage gearboxes

Mains operation 400 V, 50 Hz			Inverter operation 5 Hz -		- 20 Hz		- 50 Hz (1:10)			- 87 Hz (1:17.4)			i	Product		
n_2 [r/min]	M_2 [Nm]	c	n_{22} [r/min]	M_{22} [Nm]	n_{21} [r/min]	M_2 [Nm]	n_2 [r/min]	M_2 [Nm]	c	n_2 [r/min]	M_2 [Nm]	c		g500	MD□MA□□	
5.2	443	0.9	0.5	341	2.3	440	5.2	443	0.9	9.3	440	0.9	265.956	-S400	063-42	
4.9	463	2.1	0.5	357	2.2	461	4.9	463	2.1	8.9	461	2.1	278.273	-S950	063-42	
4.9	466	3.7	0.5	359	2.1	463	4.9	466	3.7	8.9	463	3.7	279.807	-S2100	063-42	
4.9	467	1.2	0.5	360	2.1	464	4.9	467	1.2	8.8	464	1.2	280.500	-S660	063-42	
4.6	494	3.7	0.5	380	2.0	491	4.6	494	3.7	8.4	491	3.7	296.430	-S3100	063-42	
4.5	509	3.2	0.5	392	2.0	506	4.5	509	3.2	8.1	506	3.2	305.567	-S2100	063-42	
4.4	519	1.8	0.5	399	1.9	516	4.4	519	1.8	8.0	516	1.8	311.401	-S950	063-42	
4.3	532	1.2	0.5	410	1.9	529	4.3	532	1.2	7.8	529	1.2	319.600	-S660	063-42	
4.1	558	3.7	0.4	430	1.8	555	4.1	558	3.7	7.4	555	3.7	335.215	-S3100	063-42	
4.0	566	3.2	0.4	435	1.8	562	4.0	566	3.2	7.3	562	3.2	339.584	-S2100	063-42	
3.9	592	1.4	0.4	456	1.7	589	3.9	592	1.4	7.0	589	1.4	355.658	-S950	063-42	
3.8	599	3.2	0.4	461	1.7	596	3.8	599	3.2	6.9	596	3.2	359.758	-S3100	063-42	
3.5	643	2.6	0.4	495	1.6	640	3.5	643	2.6	6.4	640	2.6	386.250	-S2100	063-42	
3.4	663	1.4	0.4	510	1.5	659	3.4	663	1.4	6.2	659	1.4	397.999	-S950	063-42	
3.4	678	3.2	0.4	522	1.5	674	3.4	678	3.2	6.1	674	3.2	406.829	-S3100	063-42	
3.2	715	2.6	0.3	550	1.4	711	3.2	715	2.6	5.8	711	2.6	429.250	-S2100	063-42	

Selection tables, 4-pole motors

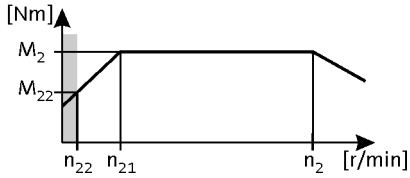

50 Hz: P_N = 0.37 kW
87 Hz: P_N = 0.66 kW

2-stage gearboxes

Mains operation 400 V, 50 Hz			Inverter operation 5 Hz -		- 20 Hz		- 50 Hz (1:10)			- 87 Hz (1:17.4)			i	Product		
n_2 [r/min]	M_2 [Nm]	c	n_{22} [r/min]	M_{22} [Nm]	n_{21} [r/min]	M_2 [Nm]	n_2 [r/min]	M_2 [Nm]	c	n_2 [r/min]	M_2 [Nm]	c		g500	MD□MA□□	
385	9.0	4.9	40	6.9	164	9.0	385	9.0	4.9	688	9.0	4.1	3.661	-S130	071-32	
281	12	4.9	29	9.4	120	12	281	12	4.9	502	12	4.1	5.021	-S130	071-32	
220	16	4.9	23	12	94	16	220	16	4.9	393	16	4.1	6.411	-S400	071-32	
219	16	4.5	23	12	93	16	219	16	4.5	392	16	3.8	6.425	-S130	071-32	
201	17	4.5	21	13	85	17	201	17	4.5	359	17	3.8	7.029	-S130	071-32	
169	20	4.9	17	16	72	20	169	20	4.9	303	20	4.1	8.322	-S130	071-32	
150	23	4.9	15	18	64	23	150	23	4.9	268	23	4.1	9.411	-S130	071-32	
124	28	4.7	13	21	53	28	124	28	4.7	221	28	4.0	11.413	-S130	071-32	
109	31	4.1	11	24	47	31	109	31	4.1	195	31	3.5	12.907	-S130	071-32	
109	32	4.9	11	24	46	32	109	32	4.9	194	32	4.1	12.992	-S220	071-32	
98	35	4.9	10	27	42	35	98	35	4.9	176	35	4.1	14.336	-S400	071-32	
97	36	3.7	9.9	27	41	35	97	36	3.7	173	35	3.1	14.606	-S130	071-32	
96	36	4.9	9.9	28	41	36	96	36	4.9	171	36	4.1	14.720	-S220	071-32	
88	39	3.4	9.1	30	38	39	88	39	3.4	158	39	2.8	15.979	-S130	071-32	
87	39	4.9	9.0	30	37	39	87	39	4.9	156	39	4.1	16.197	-S400	071-32	
85	40	4.5	8.8	31	36	40	85	40	4.5	152	40	3.8	16.571	-S220	071-32	
78	44	3.0	8.0	34	33	44	78	44	3.0	140	44	2.8	18.069	-S130	071-32	
77	44	4.5	7.9	34	33	44	77	44	4.5	138	44	4.4	18.286	-S400	071-32	
75	46	4.5	7.7	35	32	46	75	46	4.5	134	46	4.4	18.776	-S220	071-32	
69	50	2.6	7.1	38	29	49	69	50	2.6	124	49	2.5	20.381	-S130	071-32	
61	56	2.3	6.3	43	26	56	61	56	2.3	109	56	2.2	23.048	-S130	071-32	
57	61	2.1	5.8	47	24	61	57	61	2.1	101	61	2.1	24.967	-S130	071-32	
53	64	3.4	5.5	50	23	64	53	64	3.4	95	64	3.3	26.422	-S220	071-32	
50	69	1.9	5.1	53	21	69	50	69	1.9	89	69	1.8	28.233	-S130	071-32	
48	71	3.7	5.0	55	21	71	48	71	3.7	86	71	3.6	29.156	-S400	071-32	
47	73	3.0	4.8	56	20	73	47	73	3.0	84	73	2.9	29.937	-S220	071-32	
45	76	1.7	4.6	59	19	76	45	76	1.7	80	76	1.7	31.387	-S130	071-32	
43	80	2.8	4.4	62	18	80	43	80	2.8	77	80	2.8	32.867	-S220	071-32	
43	80	3.7	4.4	62	18	80	43	80	3.7	77	80	3.8	32.940	-S400	071-32	
40	86	1.5	4.1	66	17	86	40	86	1.5	71	86	1.5	35.493	-S130	071-32	
39	88	3.2	4.0	68	17	88	39	88	3.2	70	88	3.2	36.267	-S400	071-32	
38	91	2.4	3.9	70	16	90	38	91	2.4	68	90	2.4	37.238	-S220	071-32	
35	98	3.2	3.6	76	15	98	35	98	3.2	63	98	3.2	40.333	-S660	071-32	
35	98	1.3	3.6	76	15	98	35	98	1.3	62	98	1.3	40.422	-S130	071-32	
34	100	3.2	3.5	77	15	100	34	100	3.2	62	99	3.2	40.974	-S400	071-32	

Selection tables, 4-pole motors

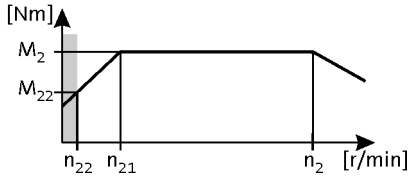

50 Hz: P_N = 0.37 kW
87 Hz: P_N = 0.66 kW

2-stage gearboxes

Mains operation 400 V, 50 Hz			Inverter operation 5 Hz -		- 20 Hz		- 50 Hz (1:10)			- 87 Hz (1:17.4)			i	Product		
n_2 [r/min]	M_2 [Nm]	c	n_{22} [r/min]	M_{22} [Nm]	n_{21} [r/min]	M_2 [Nm]	n_2 [r/min]	M_2 [Nm]	c	n_2 [r/min]	M_2 [Nm]	c		g500	MD□MA□□	
33	103	2.1	3.4	80	14	103	33	103	2.1	59	103	2.1	42.533	-S220	071-32	
31	111	1.2	3.2	86	13	111	31	111	1.2	55	111	1.2	45.711	-S130	071-32	
31	112	3.2	3.2	86	13	112	31	112	3.2	55	112	3.2	45.956	-S660	071-32	
30	114	2.8	3.1	88	13	114	30	114	2.8	54	114	2.8	46.933	-S400	071-32	
29	117	1.9	3.0	90	13	117	29	117	1.9	52	117	1.9	48.190	-S220	071-32	
29	119	2.8	3.0	92	12	119	29	119	2.8	52	119	2.8	48.950	-S660	071-32	
28	125	1.0	2.8	96	12	124	28	125	1.0	49	124	1.1	51.230	-S130	071-32	
27	126	1.8	2.8	97	12	125	27	126	1.8	49	125	1.8	51.620	-S220	071-32	
27	129	2.7	2.7	99	11	129	27	129	2.7	48	129	2.7	53.026	-S400	071-32	
25	136	2.8	2.6	104	11	135	25	136	2.8	45	135	2.8	55.773	-S660	071-32	
25	138	1.9	2.5	107	11	138	25	138	1.9	44	138	1.9	56.960	-S400	071-32	
24	141	0.9	2.5	109	10	141	24	141	0.9	44	141	0.9	57.933	-S130	071-32	
24	142	1.6	2.5	110	10	142	24	142	1.6	43	142	1.6	58.486	-S220	071-32	
22	156	0.8	2.3	120	9.3	156	22	156	0.8	39	156	0.8	64.200	-S130	071-32	
22	156	1.9	2.3	121	9.3	156	22	156	1.9	39	156	1.9	64.354	-S400	071-32	
21	160	1.1	2.2	124	9.1	160	21	160	1.1	38	160	1.1	65.975	-S220	071-32	
19	182	1.1	1.9	140	8.0	181	19	182	1.1	34	181	1.1	74.750	-S220	071-32	

3-stage gearboxes

Mains operation 400 V, 50 Hz			Inverter operation 5 Hz -		- 20 Hz		- 50 Hz (1:10)			- 87 Hz (1:17.4)			i	Product		
n_2 [r/min]	M_2 [Nm]	c	n_{22} [r/min]	M_{22} [Nm]	n_{21} [r/min]	M_2 [Nm]	n_2 [r/min]	M_2 [Nm]	c	n_2 [r/min]	M_2 [Nm]	c		g500	MD□MA□□	
35	96	2.3	3.6	74	15	96	35	96	2.3	63	96	1.9	40.012	-S220	071-32	
31	109	2.0	3.2	84	13	108	31	109	2.0	56	108	1.7	45.333	-S220	071-32	
28	119	4.9	2.9	92	12	119	28	119	4.9	51	119	4.7	49.867	-S660	071-32	
27	126	1.8	2.8	97	11	126	27	126	1.8	48	126	1.7	52.587	-S220	071-32	
25	136	4.8	2.6	105	11	136	25	136	4.8	44	136	4.6	56.818	-S660	071-32	
24	139	2.9	2.5	107	10	139	24	139	2.9	43	139	2.8	58.027	-S400	071-32	
24	143	1.5	2.4	110	10	142	24	143	1.5	42	142	1.5	59.581	-S220	071-32	
22	153	4.3	2.3	118	9.4	153	22	153	4.3	40	153	4.1	63.817	-S660	071-32	
22	157	2.6	2.2	121	9.2	157	22	157	2.6	38	157	2.4	65.559	-S400	071-32	
21	161	1.4	2.2	124	8.9	161	21	161	1.4	37	161	1.3	67.298	-S220	071-32	
20	167	4.0	2.1	129	8.6	167	20	167	4.0	36	167	3.8	69.813	-S660	071-32	
20	168	4.9	2.1	129	8.6	167	20	168	4.9	36	167	4.9	70.037	-S950	071-32	
19	174	3.8	2.0	134	8.3	174	19	174	3.8	35	174	3.8	72.713	-S660	071-32	
19	178	2.3	2.0	137	8.1	177	19	178	2.3	34	177	2.3	74.260	-S400	071-32	
19	183	1.2	1.9	141	7.9	182	19	183	1.2	33	182	1.2	76.249	-S220	071-32	
18	188	4.9	1.9	145	7.7	187	18	188	4.9	32	187	4.9	78.375	-S950	071-32	
18	190	3.5	1.8	147	7.5	190	18	190	3.5	32	190	3.5	79.545	-S660	071-32	
17	201	2.0	1.7	155	7.2	201	17	201	2.0	30	201	2.0	83.900	-S400	071-32	

Selection tables, 4-pole motors

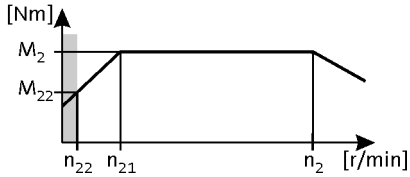

50 Hz: P_N = 0.37 kW
87 Hz: P_N = 0.66 kW

3-stage gearboxes

Mains operation 400 V, 50 Hz			Inverter operation 5 Hz -		- 20 Hz		- 50 Hz (1:10)			- 87 Hz (1:17.4)			i	Product		
n_2 [r/min]	M_2 [Nm]	c	n_{22} [r/min]	M_{22} [Nm]	n_{21} [r/min]	M_2 [Nm]	n_2 [r/min]	M_2 [Nm]	c	n_2 [r/min]	M_2 [Nm]	c		g500	MD□MA□□	
16	206	1.1	1.7	159	7.0	206	16	206	1.1	29	206	1.1	86.079	-S220	071-32	
16	213	3.1	1.6	164	6.7	213	16	213	3.1	28	213	3.1	89.048	-S660	071-32	
16	214	4.4	1.6	165	6.7	214	16	214	4.4	28	214	4.5	89.333	-S950	071-32	
15	227	1.8	1.5	175	6.3	227	15	227	1.8	27	227	1.8	94.984	-S400	071-32	
15	234	0.9	1.5	180	6.2	233	15	234	0.9	26	233	0.9	97.528	-S220	071-32	
14	239	4.0	1.5	184	6.0	239	14	239	4.0	25	239	4.0	99.968	-S950	071-32	
14	243	2.7	1.4	187	5.9	243	14	243	2.7	25	243	2.7	101.460	-S660	071-32	
13	257	1.6	1.4	198	5.6	256	13	257	1.6	24	256	1.6	107.314	-S400	071-32	
13	261	2.5	1.3	201	5.5	261	13	261	2.5	23	261	2.5	109.083	-S660	071-32	
13	268	0.8	1.3	206	5.4	267	13	268	0.8	23	267	0.8	111.747	-S220	071-32	
11	295	1.4	1.2	227	4.9	295	11	295	1.4	20	295	1.4	123.307	-S400	071-32	
11	298	2.2	1.2	229	4.8	297	11	298	2.2	20	297	2.2	124.289	-S660	071-32	
10	328	2.0	1.1	253	4.4	328	10	328	2.0	18	328	2.0	137.133	-S660	071-32	
10	334	1.2	1.0	257	4.3	333	10	334	1.2	18	333	1.2	139.313	-S400	071-32	
9.9	341	2.8	1.0	263	4.2	340	9.9	341	2.8	18	340	2.8	142.437	-S950	071-32	
9.0	374	1.8	0.9	288	3.8	373	9.0	374	1.8	16	373	1.8	156.249	-S660	071-32	
8.9	378	1.1	0.9	291	3.8	378	8.9	378	1.1	16	378	1.1	158.019	-S400	071-32	
8.8	382	2.5	0.9	294	3.8	381	8.8	382	2.5	16	381	2.5	159.394	-S950	071-32	
8.0	423	1.6	0.8	326	3.4	422	8.0	423	1.6	14	422	1.6	176.611	-S660	071-32	
8.0	424	2.2	0.8	327	3.4	423	8.0	424	2.2	14	423	2.2	177.178	-S950	071-32	
7.9	428	0.9	0.8	329	3.4	427	7.9	428	0.9	14	427	0.9	178.531	-S400	071-32	
7.1	475	2.0	0.7	366	3.0	474	7.1	475	2.0	13	474	2.0	198.270	-S950	071-32	
7.0	482	1.4	0.7	371	3.0	481	7.0	482	1.4	13	481	1.4	201.230	-S660	071-32	
6.9	490	0.8	0.7	377	2.9	489	6.9	490	0.8	12	489	0.8	204.412	-S400	071-32	
6.3	536	1.2	0.6	413	2.7	535	6.3	536	1.2	11	535	1.2	223.833	-S660	071-32	
6.1	549	1.7	0.6	423	2.6	548	6.1	549	1.7	11	548	1.7	229.289	-S950	071-32	
5.6	603	3.2	0.6	464	2.4	602	5.6	603	3.2	10	602	3.2	251.778	-S2100	071-32	
5.5	611	1.1	0.6	470	2.4	610	5.5	611	1.1	9.9	610	1.1	255.034	-S660	071-32	
5.5	614	1.6	0.6	473	2.3	613	5.5	614	1.6	9.8	613	1.6	256.585	-S950	071-32	
5.1	666	1.4	0.5	513	2.2	665	5.1	666	1.4	9.1	665	1.4	278.273	-S950	071-32	
5.0	670	3.1	0.5	516	2.1	669	5.0	670	3.1	9.0	669	3.1	279.807	-S2100	071-32	
5.0	672	0.9	0.5	517	2.1	670	5.0	672	0.9	9.0	670	0.9	280.500	-S660	071-32	
4.8	710	3.2	0.5	547	2.0	709	4.8	710	3.2	8.5	709	3.2	296.430	-S3100	071-32	
4.6	732	2.8	0.5	564	2.0	730	4.6	732	2.8	8.2	730	2.8	305.567	-S2100	071-32	
4.5	746	1.3	0.5	574	1.9	744	4.5	746	1.3	8.1	744	1.3	311.401	-S950	071-32	

Selection tables, 4-pole motors

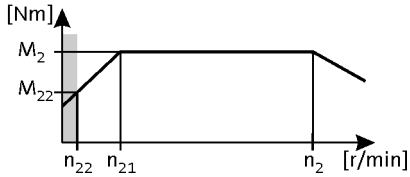

50 Hz: P_N = 0.37 kW
87 Hz: P_N = 0.66 kW

3-stage gearboxes

Mains operation 400 V, 50 Hz			Inverter operation 5 Hz -		- 20 Hz		- 50 Hz (1:10)			- 87 Hz (1:17.4)			i	Product		
n_2 [r/min]	M_2 [Nm]	c	n_{22} [r/min]	M_{22} [Nm]	n_{21} [r/min]	M_2 [Nm]	n_2 [r/min]	M_2 [Nm]	c	n_2 [r/min]	M_2 [Nm]	c		g500	MD□MA□□	
4.4	765	0.9	0.5	589	1.9	764	4.4	765	0.9	7.9	764	0.9	319.600	-S660	071-32	
4.2	803	3.2	0.4	618	1.8	801	4.2	803	3.2	7.5	801	3.2	335.215	-S3100	071-32	
4.2	813	2.5	0.4	626	1.8	812	4.2	813	2.5	7.4	812	2.5	339.584	-S2100	071-32	
4.0	852	1.1	0.4	656	1.7	850	4.0	852	1.1	7.1	850	1.1	355.658	-S950	071-32	
3.9	862	2.8	0.4	663	1.7	860	3.9	862	2.8	7.0	860	2.8	359.758	-S3100	071-32	
3.7	925	2.2	0.4	712	1.6	923	3.7	925	2.2	6.5	923	2.2	386.250	-S2100	071-32	
3.5	953	1.0	0.4	734	1.5	951	3.5	953	1.0	6.3	951	1.0	397.999	-S950	071-32	
3.5	974	2.8	0.4	750	1.5	972	3.5	974	2.8	6.2	972	2.8	406.829	-S3100	071-32	
3.3	1028	2.0	0.3	792	1.4	1026	3.3	1028	2.0	5.9	1026	2.0	429.250	-S2100	071-32	

Selection tables, 4-pole motors

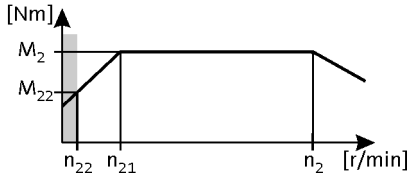

50 Hz: P_N = 0.55 kW
87 Hz: P_N = 1.0 kW

2-stage gearboxes

Mains operation 400 V, 50 Hz			Inverter operation 5 Hz -		- 20 Hz		- 50 Hz (1:10)			- 87 Hz (1:17.4)			i	Product		
n_2 [r/min]	M_2 [Nm]	c	n_{22} [r/min]	M_{22} [Nm]	n_{21} [r/min]	M_2 [Nm]	n_2 [r/min]	M_2 [Nm]	c	n_2 [r/min]	M_2 [Nm]	c		g500	MD□MA□□	
421	12	5.1	43	9.3	180	12	421	12	5.1	753	12	4.3	3.339	-S400	071-42	
384	13	4.5	40	10	164	13	384	13	4.5	687	13	3.8	3.661	-S130	071-42	
366	14	5.1	38	11	156	14	366	14	5.1	655	14	4.3	3.840	-S220	071-42	
280	18	4.2	29	14	120	18	280	18	4.2	501	18	3.5	5.021	-S130	071-42	
240	21	4.5	25	16	102	21	240	21	4.5	429	22	3.7	5.860	-S400	071-42	
219	23	4.5	23	18	94	23	219	23	4.5	392	24	3.8	6.411	-S400	071-42	
219	23	3.7	23	18	93	23	219	23	3.7	391	24	3.1	6.425	-S130	071-42	
208	25	5.1	21	19	89	25	208	25	5.1	372	25	4.3	6.767	-S220	071-42	
200	25	3.6	21	20	85	25	200	25	3.6	358	26	3.0	7.029	-S130	071-42	
188	27	5.1	19	21	80	27	188	27	5.1	337	28	4.3	7.467	-S400	071-42	
183	28	5.1	19	21	78	28	183	28	5.1	328	28	4.3	7.667	-S220	071-42	
169	30	3.8	17	23	72	30	169	30	3.8	302	31	3.2	8.322	-S130	071-42	
167	31	5.1	17	24	71	31	167	31	5.1	298	31	4.3	8.436	-S400	071-42	
149	34	3.7	15	26	64	34	149	34	3.7	267	35	3.0	9.411	-S130	071-42	
123	41	3.1	13	32	53	41	123	41	3.1	220	42	2.6	11.413	-S130	071-42	
118	43	4.5	12	33	51	43	118	43	4.5	212	44	3.7	11.876	-S220	071-42	
109	47	2.8	11	36	47	47	109	47	2.8	195	48	2.3	12.907	-S130	071-42	
108	47	4.5	11	36	46	47	108	47	4.5	194	48	3.8	12.992	-S220	071-42	
107	48	4.5	11	37	46	48	107	48	4.5	192	48	3.7	13.105	-S400	071-42	
104	49	4.5	11	38	45	49	104	49	4.5	187	50	3.7	13.456	-S220	071-42	
98	52	4.5	10	40	42	52	98	52	4.5	175	53	3.8	14.336	-S400	071-42	
96	53	2.5	9.9	41	41	53	96	53	2.5	172	54	2.0	14.606	-S130	071-42	
95	53	4.1	9.9	41	41	53	95	53	4.1	171	54	3.4	14.720	-S220	071-42	
95	54	4.5	9.8	41	41	54	95	54	4.5	170	55	3.7	14.806	-S400	071-42	
89	57	4.5	9.2	44	38	57	89	57	4.5	160	58	3.7	15.714	-S660	071-42	
88	58	2.2	9.1	45	38	58	88	58	2.2	157	59	1.9	15.979	-S130	071-42	
87	59	4.5	9.0	45	37	59	87	59	4.5	155	60	3.8	16.197	-S400	071-42	
85	60	3.7	8.8	46	36	60	85	60	3.7	152	61	3.0	16.571	-S220	071-42	
79	65	4.5	8.1	50	34	65	79	65	4.5	141	66	3.7	17.905	-S660	071-42	
78	66	2.0	8.0	51	33	66	78	66	2.0	139	67	1.9	18.069	-S130	071-42	
77	66	4.2	7.9	51	33	66	77	66	4.2	138	67	4.0	18.286	-S400	071-42	
75	68	3.2	7.7	52	32	68	75	68	3.2	134	69	3.0	18.776	-S220	071-42	
69	74	3.0	7.1	57	30	74	69	74	3.0	124	75	2.8	20.300	-S220	071-42	
69	74	1.8	7.1	57	29	74	69	74	1.8	123	75	1.7	20.381	-S130	071-42	
68	75	4.2	7.0	58	29	75	68	75	4.2	122	76	4.0	20.659	-S400	071-42	

Selection tables, 4-pole motors

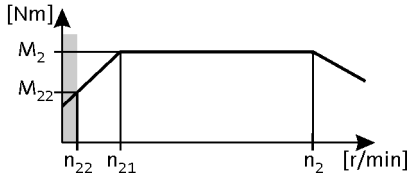

50 Hz: P_N = 0.55 kW
87 Hz: P_N = 1.0 kW

2-stage gearboxes

Mains operation 400 V, 50 Hz			Inverter operation 5 Hz -		- 20 Hz		- 50 Hz (1:10)			- 87 Hz (1:17.4)			i	Product		
n_2 [r/min]	M_2 [Nm]	c	n_{22} [r/min]	M_{22} [Nm]	n_{21} [r/min]	M_2 [Nm]	n_2 [r/min]	M_2 [Nm]	c	n_2 [r/min]	M_2 [Nm]	c		g500	MD□MA□□	
63	81	3.7	6.5	63	27	81	63	81	3.7	112	83	3.5	22.400	-S400	071-42	
61	83	2.6	6.3	64	26	83	61	83	2.6	109	85	2.5	23.000	-S220	071-42	
61	84	1.6	6.3	64	26	84	61	84	1.6	109	85	1.5	23.048	-S130	071-42	
56	91	1.4	5.8	70	24	91	56	91	1.4	101	92	1.4	24.967	-S130	071-42	
56	91	3.7	5.8	70	24	91	56	91	3.7	100	92	3.5	25.056	-S660	071-42	
56	92	3.7	5.7	71	24	92	56	92	3.7	99	93	3.5	25.308	-S400	071-42	
53	96	2.3	5.5	74	23	96	53	96	2.3	95	97	2.2	26.422	-S220	071-42	
50	102	1.3	5.1	79	21	102	50	102	1.3	89	104	1.2	28.233	-S130	071-42	
49	104	3.7	5.1	80	21	104	49	104	3.7	88	105	3.5	28.548	-S660	071-42	
48	106	3.4	5.0	81	21	106	48	106	3.4	86	107	3.2	29.156	-S400	071-42	
47	109	2.0	4.8	84	20	109	47	109	2.0	84	110	1.9	29.937	-S220	071-42	
45	113	3.2	4.7	87	19	113	45	113	3.2	81	115	3.1	31.167	-S660	071-42	
45	114	1.1	4.6	88	19	114	45	114	1.1	80	116	1.1	31.387	-S130	071-42	
43	119	1.9	4.4	92	18	119	43	119	1.9	77	121	1.8	32.867	-S220	071-42	
43	119	3.4	4.4	92	18	119	43	119	3.4	76	121	3.3	32.940	-S400	071-42	
40	129	1.0	4.1	99	17	129	40	129	1.0	71	131	1.0	35.493	-S130	071-42	
40	129	3.2	4.1	99	17	129	40	129	3.2	71	131	3.1	35.511	-S660	071-42	
39	132	2.9	4.0	101	17	132	39	132	2.9	69	134	2.8	36.267	-S400	071-42	
38	135	1.6	3.9	104	16	135	38	135	1.6	68	137	1.6	37.238	-S220	071-42	
35	146	2.9	3.6	113	15	146	35	146	2.9	62	149	2.8	40.333	-S660	071-42	
35	147	0.9	3.6	113	15	147	35	147	0.9	62	149	0.9	40.422	-S130	071-42	
34	149	2.7	3.5	114	15	149	34	149	2.7	61	151	2.7	40.974	-S400	071-42	
34	149	3.2	3.5	115	15	149	34	149	3.2	61	151	3.1	41.067	-S950	071-42	
33	154	1.4	3.4	119	14	154	33	154	1.4	59	157	1.4	42.533	-S220	071-42	
31	167	3.2	3.2	128	13	167	31	167	3.2	55	169	3.1	45.956	-S950	071-42	
31	167	2.9	3.2	128	13	167	31	167	2.9	55	169	2.8	45.956	-S660	071-42	
30	170	1.9	3.1	131	13	170	30	170	1.9	54	173	1.8	46.933	-S400	071-42	
29	175	1.3	3.0	135	13	175	29	175	1.3	52	178	1.2	48.190	-S220	071-42	
29	178	2.4	3.0	137	12	178	29	178	2.4	51	180	2.4	48.950	-S660	071-42	
28	181	2.8	2.9	139	12	181	28	181	2.8	51	184	2.7	49.840	-S950	071-42	
27	187	1.2	2.8	144	12	187	27	187	1.2	49	190	1.2	51.620	-S220	071-42	
27	192	1.8	2.7	148	11	192	27	192	1.8	47	195	1.8	53.026	-S400	071-42	
25	202	2.8	2.6	156	11	202	25	202	2.8	45	205	2.7	55.773	-S950	071-42	
25	202	2.4	2.6	156	11	202	25	202	2.4	45	205	2.4	55.773	-S660	071-42	
25	207	1.3	2.5	159	11	207	25	207	1.3	44	210	1.3	56.960	-S400	071-42	

Selection tables, 4-pole motors

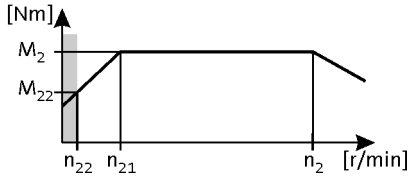

50 Hz: P_N = 0.55 kW
87 Hz: P_N = 1.0 kW

2-stage gearboxes

Mains operation 400 V, 50 Hz			Inverter operation 5 Hz -		- 20 Hz		- 50 Hz (1:10)			- 87 Hz (1:17.4)			i	Product		
n_2 [r/min]	M_2 [Nm]	c	n_{22} [r/min]	M_{22} [Nm]	n_{21} [r/min]	M_2 [Nm]	n_2 [r/min]	M_2 [Nm]	c	n_2 [r/min]	M_2 [Nm]	c		g500	MD□MA□□	
24	212	1.0	2.5	163	10	212	24	212	1.0	43	215	1.0	58.486	-S220	071-42	
22	228	2.2	2.3	176	9.5	228	22	228	2.2	40	232	2.2	63.000	-S950	071-42	
22	233	1.3	2.3	180	9.3	233	22	233	1.3	39	237	1.3	64.354	-S400	071-42	
20	256	2.2	2.1	197	8.5	256	20	256	2.2	36	260	2.2	70.500	-S950	071-42	

3-stage gearboxes

Mains operation 400 V, 50 Hz			Inverter operation 5 Hz -		- 20 Hz		- 50 Hz (1:10)			- 87 Hz (1:17.4)			i	Product		
n_2 [r/min]	M_2 [Nm]	c	n_{22} [r/min]	M_{22} [Nm]	n_{21} [r/min]	M_2 [Nm]	n_2 [r/min]	M_2 [Nm]	c	n_2 [r/min]	M_2 [Nm]	c		g500	MD□MA□□	
28	178	3.5	2.9	137	12	178	28	178	3.5	50	181	3.3	49.867	-S660	071-42	
25	203	3.2	2.6	156	11	203	25	203	3.2	44	206	3.0	56.818	-S660	071-42	
24	207	1.9	2.5	160	10	207	24	207	1.9	43	211	1.8	58.027	-S400	071-42	
22	228	2.9	2.3	176	9.4	228	22	228	2.9	39	232	2.7	63.817	-S660	071-42	
22	229	4.2	2.3	176	9.4	229	22	229	4.2	39	232	3.9	64.022	-S950	071-42	
21	234	1.7	2.2	180	9.2	234	21	234	1.7	38	238	1.6	65.559	-S400	071-42	
20	249	2.7	2.1	192	8.6	249	20	249	2.7	36	253	2.5	69.813	-S660	071-42	
20	250	3.8	2.1	193	8.6	250	20	250	3.8	36	254	3.7	70.037	-S950	071-42	
20	256	3.7	2.0	197	8.4	256	20	256	3.7	35	260	3.7	71.644	-S950	071-42	
19	260	2.5	2.0	200	8.3	260	19	260	2.5	35	264	2.5	72.713	-S660	071-42	
19	265	1.5	2.0	204	8.1	265	19	265	1.5	34	269	1.5	74.260	-S400	071-42	
18	280	3.4	1.9	216	7.7	280	18	280	3.4	32	284	3.3	78.375	-S950	071-42	
18	284	2.3	1.8	219	7.5	284	18	284	2.3	32	289	2.3	79.545	-S660	071-42	
17	300	1.3	1.7	231	7.2	300	17	300	1.3	30	304	1.3	83.900	-S400	071-42	
16	318	2.1	1.6	245	6.7	318	16	318	2.1	28	323	2.0	89.048	-S660	071-42	
16	319	3.0	1.6	246	6.7	319	16	319	3.0	28	324	2.9	89.333	-S950	071-42	
15	339	1.2	1.5	261	6.3	339	15	339	1.2	27	345	1.2	94.984	-S400	071-42	
14	350	4.5	1.5	270	6.1	350	14	350	4.5	26	356	4.4	98.095	-S2100	071-42	
14	357	2.7	1.5	275	6.0	357	14	357	2.7	25	363	2.6	99.968	-S950	071-42	
14	362	1.8	1.4	279	5.9	362	14	362	1.8	25	368	1.8	101.460	-S660	071-42	
13	383	1.0	1.4	295	5.6	383	13	383	1.0	23	389	1.0	107.314	-S400	071-42	
13	389	4.5	1.3	300	5.5	389	13	389	4.5	23	396	4.4	109.016	-S2100	071-42	
13	390	1.7	1.3	300	5.5	390	13	390	1.7	23	396	1.7	109.083	-S660	071-42	
13	391	2.4	1.3	301	5.5	391	13	391	2.4	23	397	2.4	109.433	-S950	071-42	
12	413	4.5	1.3	318	5.2	413	12	413	4.5	22	419	4.4	115.492	-S3100	071-42	
12	437	2.2	1.2	337	4.9	437	12	437	2.2	21	444	2.1	122.461	-S950	071-42	
11	441	0.9	1.2	339	4.9	441	11	441	0.9	20	447	0.9	123.307	-S400	071-42	
11	444	1.5	1.2	342	4.8	444	11	444	1.5	20	451	1.5	124.289	-S660	071-42	
11	467	4.5	1.1	359	4.6	467	11	467	4.5	19	474	4.4	130.603	-S3100	071-42	
10	490	1.4	1.1	377	4.4	490	10	490	1.4	18	498	1.3	137.133	-S660	071-42	
9.9	509	1.9	1.0	392	4.2	509	9.9	509	1.9	18	517	1.8	142.437	-S950	071-42	

Selection tables, 4-pole motors

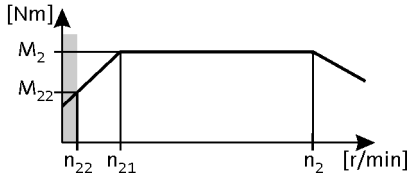

50 Hz: P_N = 0.55 kW
87 Hz: P_N = 1.0 kW

3-stage gearboxes

Mains operation 400 V, 50 Hz			Inverter operation 5 Hz -		- 20 Hz		- 50 Hz (1:10)			- 87 Hz (1:17.4)			i	Product		
n_2 [r/min]	M_2 [Nm]	c	n_{22} [r/min]	M_{22} [Nm]	n_{21} [r/min]	M_2 [Nm]	n_2 [r/min]	M_2 [Nm]	c	n_2 [r/min]	M_2 [Nm]	c		g500	MD□MA□□	
9.0	558	1.2	0.9	430	3.8	558	9.0	558	1.2	16	567	1.2	156.249	-S660	071-42	
9.0	559	3.7	0.9	430	3.8	559	9.0	559	3.7	16	568	3.6	156.407	-S2100	071-42	
8.8	569	1.7	0.9	439	3.8	569	8.8	569	1.7	16	578	1.6	159.394	-S950	071-42	
8.1	621	3.3	0.8	478	3.5	621	8.1	621	3.3	15	631	3.3	173.820	-S2100	071-42	
8.0	631	1.1	0.8	486	3.4	631	8.0	631	1.1	14	641	1.0	176.611	-S660	071-42	
7.9	633	1.5	0.8	487	3.4	633	7.9	633	1.5	14	643	1.5	177.178	-S950	071-42	
7.6	658	3.7	0.8	507	3.3	658	7.6	658	3.7	14	668	3.7	184.146	-S3100	071-42	
7.2	695	3.0	0.7	535	3.1	695	7.2	695	3.0	13	706	2.9	194.556	-S2100	071-42	
7.1	708	1.3	0.7	545	3.0	708	7.1	708	1.3	13	719	1.3	198.270	-S950	071-42	
7.0	719	0.9	0.7	554	3.0	719	7.0	719	0.9	13	730	0.9	201.230	-S660	071-42	
6.7	744	3.7	0.7	573	2.9	744	6.7	744	3.7	12	756	3.7	208.240	-S3100	071-42	
6.5	772	2.7	0.7	595	2.8	772	6.5	772	2.7	12	785	2.6	216.215	-S2100	071-42	
6.1	818	3.2	0.6	630	2.6	818	6.1	818	3.2	11	831	3.1	229.059	-S3100	071-42	
6.1	819	1.2	0.6	631	2.6	819	6.1	819	1.2	11	832	1.1	229.289	-S950	071-42	
5.9	851	3.2	0.6	655	2.5	851	5.9	851	3.2	11	865	3.1	238.252	-S4500	071-42	
5.6	899	2.3	0.6	693	2.4	899	5.6	899	2.3	10	914	2.2	251.778	-S2100	071-42	
5.5	917	1.0	0.6	706	2.3	917	5.5	917	1.0	9.8	931	1.0	256.585	-S950	071-42	
5.4	925	3.2	0.6	713	2.3	925	5.4	925	3.2	9.7	940	3.1	259.030	-S3100	071-42	
5.3	950	3.2	0.5	732	2.3	950	5.3	950	3.2	9.5	965	3.1	265.956	-S4500	071-42	
5.0	994	1.0	0.5	766	2.2	1010	5.0	994	1.0	9.0	1010	0.9	278.273	-S950	071-42	
5.0	1000	2.1	0.5	770	2.1	1000	5.0	1000	2.1	9.0	1015	2.0	279.807	-S2100	071-42	
4.9	1033	2.8	0.5	795	2.1	1033	4.9	1033	2.8	8.7	1049	2.7	289.151	-S4500	071-42	
4.7	1059	2.9	0.5	815	2.0	1059	4.7	1059	2.9	8.5	1076	2.8	296.430	-S3100	071-42	
4.6	1092	1.9	0.5	841	2.0	1092	4.6	1092	1.9	8.2	1109	1.9	305.567	-S2100	071-42	
4.5	1112	0.9	0.5	857	1.9	1112	4.5	1112	0.9	8.1	1130	0.8	311.401	-S950	071-42	
4.4	1153	2.8	0.4	888	1.9	1153	4.4	1153	2.8	7.8	1171	2.7	322.773	-S4500	071-42	
4.2	1198	2.6	0.4	922	1.8	1198	4.2	1198	2.6	7.5	1216	2.6	335.215	-S3100	071-42	
4.1	1213	1.7	0.4	934	1.8	1213	4.1	1213	1.7	7.4	1232	1.7	339.584	-S2100	071-42	
3.9	1285	2.4	0.4	990	1.7	1285	3.9	1285	2.4	7.0	1305	2.4	359.758	-S3100	071-42	
3.8	1306	2.2	0.4	1005	1.6	1306	3.8	1306	2.2	6.9	1326	2.2	365.500	-S4500	071-42	
3.6	1380	1.4	0.4	1063	1.6	1380	3.6	1380	1.4	6.5	1402	1.3	386.250	-S2100	071-42	
3.5	1453	2.1	0.4	1119	1.5	1453	3.5	1453	2.1	6.2	1476	2.1	406.829	-S3100	071-42	
3.4	1458	2.2	0.4	1122	1.5	1458	3.4	1458	2.2	6.2	1480	2.2	408.000	-S4500	071-42	
3.3	1533	1.3	0.3	1181	1.4	1533	3.3	1533	1.3	5.9	1558	1.3	429.250	-S2100	071-42	

Selection tables, 4-pole motors

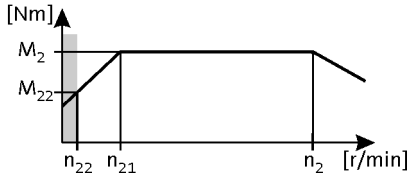

50 Hz: P_N = 0.75 kW
87 Hz: P_N = 1.35 kW

2-stage gearboxes

Mains operation 400 V, 50 Hz			Inverter operation 5 Hz -		- 20 Hz		- 50 Hz (1:10)			- 87 Hz (1:17.4)			i	Product		
n_2 [r/min]	M_2 [Nm]	c	n_{22} [r/min]	M_{22} [Nm]	n_{21} [r/min]	M_2 [Nm]	n_2 [r/min]	M_2 [Nm]	c	n_2 [r/min]	M_2 [Nm]	c		g500	m5□□	
434	16	4.9	43	12	180	16	434	16	4.9	767	16	4.0	3.339	-S400	50-P80/M4	
396	18	3.6	40	14	164	18	396	18	3.6	699	18	3.0	3.661	-S130	50-P80/M4	
378	18	4.9	38	14	156	18	378	18	4.9	667	19	4.0	3.840	-S220	50-P80/M4	
289	24	3.2	29	19	120	24	289	24	3.2	510	25	2.6	5.021	-S130	50-P80/M4	
247	28	4.3	25	22	102	28	247	28	4.3	437	29	3.5	5.860	-S400	50-P80/M4	
226	31	4.3	23	24	94	31	226	31	4.3	399	31	3.5	6.411	-S400	50-P80/M4	
226	31	2.8	23	24	93	31	226	31	2.8	398	31	2.3	6.425	-S130	50-P80/M4	
214	32	4.9	21	25	89	32	214	32	4.9	378	33	4.0	6.767	-S220	50-P80/M4	
206	34	2.7	21	26	85	34	206	34	2.7	364	34	2.2	7.029	-S130	50-P80/M4	
194	36	4.9	19	28	80	36	194	36	4.9	343	36	4.0	7.467	-S400	50-P80/M4	
189	37	4.9	19	28	78	37	189	37	4.9	334	37	4.0	7.667	-S220	50-P80/M4	
174	40	2.9	17	31	72	40	174	40	2.9	308	41	2.4	8.322	-S130	50-P80/M4	
172	40	4.9	17	31	71	40	172	40	4.9	304	41	4.0	8.436	-S400	50-P80/M4	
154	45	2.8	15	35	64	45	154	45	2.8	272	46	2.3	9.411	-S130	50-P80/M4	
127	55	2.4	13	42	53	55	127	55	2.4	224	56	2.0	11.413	-S130	50-P80/M4	
122	57	3.9	12	44	51	57	122	57	3.9	216	58	3.2	11.876	-S220	50-P80/M4	
112	62	2.1	11	48	47	62	112	62	2.1	198	63	1.7	12.907	-S130	50-P80/M4	
112	62	3.5	11	48	46	62	112	62	3.5	197	63	2.9	12.992	-S220	50-P80/M4	
111	63	4.3	11	48	46	63	111	63	4.3	195	64	3.5	13.105	-S400	50-P80/M4	
108	64	3.4	11	50	45	64	108	64	3.4	190	66	2.8	13.456	-S220	50-P80/M4	
101	69	4.3	10	53	42	69	101	69	4.3	179	70	3.5	14.336	-S400	50-P80/M4	
99	70	1.9	9.9	54	41	70	99	70	1.9	175	71	1.5	14.606	-S130	50-P80/M4	
99	71	3.1	9.9	54	41	71	99	71	3.1	174	72	2.6	14.720	-S220	50-P80/M4	
98	71	4.3	9.8	55	41	71	98	71	4.3	173	72	3.5	14.806	-S400	50-P80/M4	
92	75	4.3	9.2	58	38	75	92	75	4.3	163	77	3.5	15.714	-S660	50-P80/M4	
91	77	1.7	9.1	59	38	77	91	77	1.7	160	78	1.4	15.979	-S130	50-P80/M4	
90	78	4.3	9.0	60	37	78	90	78	4.3	158	79	3.5	16.197	-S400	50-P80/M4	
88	79	2.8	8.8	61	36	79	88	79	2.8	155	81	2.3	16.571	-S220	50-P80/M4	
81	86	4.3	8.1	66	34	86	81	86	4.3	143	87	3.5	17.905	-S660	50-P80/M4	
80	87	1.5	8.0	67	33	87	80	87	1.5	142	88	1.4	18.069	-S130	50-P80/M4	
79	88	4.0	7.9	67	33	88	79	88	4.0	140	89	3.7	18.286	-S400	50-P80/M4	
77	90	2.5	7.7	69	32	90	77	90	2.5	136	92	2.3	18.776	-S220	50-P80/M4	
71	97	2.3	7.1	75	30	97	71	97	2.3	126	99	2.1	20.300	-S220	50-P80/M4	
71	98	1.3	7.1	75	29	100	71	98	1.3	126	100	1.2	20.381	-S130	50-P80/M4	
70	99	4.0	7.0	76	29	101	70	99	4.0	124	101	3.7	20.659	-S400	50-P80/M4	

Selection tables, 4-pole motors

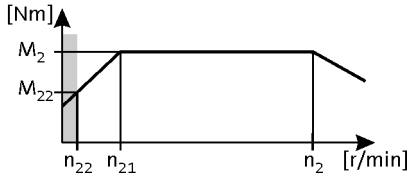

50 Hz: P_N = 0.75 kW
87 Hz: P_N = 1.35 kW

2-stage gearboxes

Mains operation 400 V, 50 Hz			Inverter operation 5 Hz -		- 20 Hz		- 50 Hz (1:10)			- 87 Hz (1:17.4)			i	Product		
n_2 [r/min]	M_2 [Nm]	c	n_{22} [r/min]	M_{22} [Nm]	n_{21} [r/min]	M_2 [Nm]	n_2 [r/min]	M_2 [Nm]	c	n_2 [r/min]	M_2 [Nm]	c		g500	m5□□	
65	107	3.5	6.5	83	27	107	65	107	3.5	114	109	3.3	22.400	-S400	50-P80/M4	
63	110	2.0	6.3	85	26	110	63	110	2.0	111	112	1.9	23.000	-S220	50-P80/M4	
63	110	1.2	6.3	85	26	110	63	110	1.2	111	113	1.1	23.048	-S130	50-P80/M4	
58	120	1.1	5.8	92	24	120	58	120	1.1	103	122	1.0	24.967	-S130	50-P80/M4	
58	120	3.5	5.8	92	24	120	58	120	3.5	102	122	3.3	25.056	-S660	50-P80/M4	
57	121	3.3	5.7	93	24	121	57	121	3.3	101	124	3.1	25.308	-S400	50-P80/M4	
55	127	1.7	5.5	97	23	127	55	127	1.7	97	129	1.6	26.422	-S220	50-P80/M4	
51	135	1.0	5.1	104	21	135	51	135	1.0	91	138	0.9	28.233	-S130	50-P80/M4	
51	137	3.5	5.1	105	21	137	51	137	3.5	90	139	3.3	28.548	-S660	50-P80/M4	
50	140	2.9	5.0	108	21	140	50	140	2.9	88	142	2.7	29.156	-S400	50-P80/M4	
48	143	1.5	4.8	110	20	143	48	143	1.5	86	146	1.4	29.937	-S220	50-P80/M4	
47	149	3.0	4.7	115	19	149	47	149	3.0	82	152	2.9	31.167	-S660	50-P80/M4	
46	150	0.9	4.6	116	19	150	46	150	0.9	82	153	0.9	31.387	-S130	50-P80/M4	
44	158	1.4	4.4	121	18	158	44	158	1.4	78	161	1.4	32.867	-S220	50-P80/M4	
44	158	2.5	4.4	121	18	158	44	158	2.5	78	161	2.5	32.940	-S400	50-P80/M4	
41	170	3.0	4.1	131	17	170	41	170	3.0	72	174	2.9	35.511	-S660	50-P80/M4	
40	174	2.3	4.0	134	17	174	40	174	2.3	71	177	2.3	36.267	-S400	50-P80/M4	
39	178	1.2	3.9	137	16	178	39	178	1.2	69	182	1.2	37.238	-S220	50-P80/M4	
36	193	2.7	3.6	149	15	193	36	193	2.7	64	197	2.7	40.333	-S660	50-P80/M4	
35	196	2.0	3.5	151	15	196	35	196	2.0	63	200	2.0	40.974	-S400	50-P80/M4	
35	197	3.0	3.5	151	15	197	35	197	3.0	62	201	2.9	41.067	-S950	50-P80/M4	
34	204	1.1	3.4	157	14	204	34	204	1.1	60	208	1.1	42.533	-S220	50-P80/M4	
32	220	3.0	3.2	169	13	220	32	220	3.0	56	225	2.9	45.956	-S950	50-P80/M4	
32	220	2.7	3.2	169	13	220	32	220	2.7	56	225	2.7	45.956	-S660	50-P80/M4	
31	225	1.4	3.1	173	13	225	31	225	1.4	55	229	1.4	46.933	-S400	50-P80/M4	
30	231	1.0	3.0	178	13	231	30	231	1.0	53	235	0.9	48.190	-S220	50-P80/M4	
30	235	1.9	3.0	181	12	235	30	235	1.9	52	239	1.9	48.950	-S660	50-P80/M4	
29	239	2.6	2.9	184	12	239	29	239	2.6	51	244	2.6	49.840	-S950	50-P80/M4	
28	247	0.9	2.8	190	12	247	28	247	0.9	50	252	0.9	51.620	-S220	50-P80/M4	
27	254	1.4	2.7	196	11	254	27	254	1.4	48	259	1.3	53.026	-S400	50-P80/M4	
26	267	2.6	2.6	206	11	267	26	267	2.6	46	272	2.6	55.773	-S950	50-P80/M4	
26	267	1.9	2.6	206	11	267	26	267	1.9	46	272	1.9	55.773	-S660	50-P80/M4	
26	273	1.0	2.5	210	11	273	26	273	1.0	45	278	1.0	56.960	-S400	50-P80/M4	
23	302	2.1	2.3	232	9.5	302	23	302	2.1	41	308	2.0	63.000	-S950	50-P80/M4	
23	308	1.0	2.3	237	9.3	308	23	308	1.0	40	314	1.0	64.354	-S400	50-P80/M4	

Selection tables, 4-pole motors

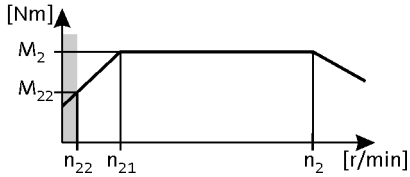

50 Hz: P_N = 0.75 kW
87 Hz: P_N = 1.35 kW

2-stage gearboxes

Mains operation 400 V, 50 Hz			Inverter operation 5 Hz -		- 20 Hz		- 50 Hz (1:10)			- 87 Hz (1:17.4)			i	Product		
n_2 [r/min]	M_2 [Nm]	c	n_{22} [r/min]	M_{22} [Nm]	n_{21} [r/min]	M_2 [Nm]	n_2 [r/min]	M_2 [Nm]	c	n_2 [r/min]	M_2 [Nm]	c		g500	m5□□	
21	338	2.1	2.1	260	8.5	338	21	338	2.1	36	344	2.0	70.500	-S950	50-P80/M4	

3-stage gearboxes

Mains operation 400 V, 50 Hz			Inverter operation 5 Hz -		- 20 Hz		- 50 Hz (1:10)			- 87 Hz (1:17.4)			i	Product		
n_2 [r/min]	M_2 [Nm]	c	n_{22} [r/min]	M_{22} [Nm]	n_{21} [r/min]	M_2 [Nm]	n_2 [r/min]	M_2 [Nm]	c	n_2 [r/min]	M_2 [Nm]	c		g500	m5□□	
29	235	2.7	2.9	181	12	235	29	235	2.7	51	240	2.5	49.867	-S660	50-P80/M4	
28	248	0.9	2.8	191	11	248	28	248	0.9	49	253	0.8	52.587	-S220	50-P80/M4	
26	268	2.4	2.6	206	11	268	26	268	2.4	45	273	2.3	56.818	-S660	50-P80/M4	
25	274	1.5	2.5	211	10	274	25	274	1.5	44	279	1.4	58.027	-S400	50-P80/M4	
23	301	2.2	2.3	232	9.4	301	23	301	2.2	40	307	2.0	63.817	-S660	50-P80/M4	
23	302	3.1	2.3	233	9.4	302	23	302	3.1	40	308	2.9	64.022	-S950	50-P80/M4	
22	309	1.3	2.2	238	9.2	309	22	309	1.3	39	316	1.2	65.559	-S400	50-P80/M4	
21	330	2.0	2.1	254	8.6	330	21	330	2.0	37	336	1.9	69.813	-S660	50-P80/M4	
21	331	2.9	2.1	254	8.6	331	21	331	2.9	37	337	2.8	70.037	-S950	50-P80/M4	
20	338	2.8	2.0	260	8.4	338	20	338	2.8	36	345	2.8	71.644	-S950	50-P80/M4	
20	343	1.9	2.0	264	8.3	343	20	343	1.9	35	350	1.9	72.713	-S660	50-P80/M4	
20	351	1.1	2.0	270	8.1	351	20	351	1.1	35	357	1.1	74.260	-S400	50-P80/M4	
19	370	2.6	1.9	285	7.7	370	19	370	2.6	33	377	2.5	78.375	-S950	50-P80/M4	
18	375	1.8	1.8	289	7.5	375	18	375	1.8	32	383	1.7	79.545	-S660	50-P80/M4	
17	396	1.0	1.7	305	7.2	396	17	396	1.0	31	404	1.0	83.900	-S400	50-P80/M4	
16	420	1.6	1.6	323	6.7	420	16	420	1.6	29	429	1.5	89.048	-S660	50-P80/M4	
16	422	2.3	1.6	324	6.7	422	16	422	2.3	29	430	2.2	89.333	-S950	50-P80/M4	
15	448	0.9	1.5	345	6.3	448	15	448	0.9	27	457	0.9	94.984	-S400	50-P80/M4	
15	463	4.3	1.5	356	6.1	463	15	463	4.3	26	472	4.2	98.095	-S2100	50-P80/M4	
15	472	2.0	1.5	363	6.0	472	15	472	2.0	26	481	2.0	99.968	-S950	50-P80/M4	
14	479	1.4	1.4	369	5.9	479	14	479	1.4	25	488	1.4	101.460	-S660	50-P80/M4	
13	515	4.0	1.3	396	5.5	515	13	515	4.0	24	525	3.9	109.016	-S2100	50-P80/M4	
13	515	1.3	1.3	396	5.5	515	13	515	1.3	24	525	1.3	109.083	-S660	50-P80/M4	
13	517	1.8	1.3	397	5.5	517	13	517	1.8	23	527	1.8	109.433	-S950	50-P80/M4	
13	545	4.3	1.3	419	5.2	545	13	545	4.3	22	556	4.2	115.492	-S3100	50-P80/M4	
12	578	1.6	1.2	445	4.9	578	12	578	1.6	21	589	1.6	122.461	-S950	50-P80/M4	
12	587	1.1	1.2	451	4.8	587	12	587	1.1	21	598	1.1	124.289	-S660	50-P80/M4	
11	616	4.3	1.1	474	4.6	616	11	616	4.3	20	629	4.2	130.603	-S3100	50-P80/M4	
11	647	1.0	1.1	498	4.4	647	11	647	1.0	19	660	1.0	137.133	-S660	50-P80/M4	
10	672	1.4	1.0	517	4.2	672	10	672	1.4	18	685	1.4	142.437	-S950	50-P80/M4	
9.3	738	0.9	0.9	567	3.8	738	9.3	738	0.9	16	752	0.9	156.249	-S660	50-P80/M4	
9.3	738	2.8	0.9	568	3.8	738	9.3	738	2.8	16	753	2.7	156.407	-S2100	50-P80/M4	
9.1	752	1.3	0.9	579	3.8	752	9.1	752	1.3	16	767	1.2	159.394	-S950	50-P80/M4	
8.3	820	2.5	0.8	631	3.5	820	8.3	820	2.5	15	837	2.5	173.820	-S2100	50-P80/M4	

Selection tables, 4-pole motors

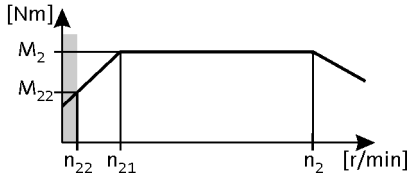

50 Hz: P_N = 0.75 kW
87 Hz: P_N = 1.35 kW

3-stage gearboxes

Mains operation 400 V, 50 Hz			Inverter operation 5 Hz -		- 20 Hz		- 50 Hz (1:10)			- 87 Hz (1:17.4)			i	Product		
n_2 [r/min]	M_2 [Nm]	c	n_{22} [r/min]	M_{22} [Nm]	n_{21} [r/min]	M_2 [Nm]	n_2 [r/min]	M_2 [Nm]	c	n_2 [r/min]	M_2 [Nm]	c		g500	m5□□	
8.2	836	1.1	0.8	643	3.4	836	8.2	836	1.1	14	853	1.1	177.178	-S950	50-P80/M4	
7.9	869	3.5	0.8	669	3.3	869	7.9	869	3.5	14	886	3.5	184.146	-S3100	50-P80/M4	
7.5	918	2.2	0.7	707	3.1	918	7.5	918	2.2	13	936	2.2	194.556	-S2100	50-P80/M4	
7.3	936	1.0	0.7	720	3.0	936	7.3	936	1.0	13	954	1.0	198.270	-S950	50-P80/M4	
7.0	983	3.2	0.7	756	2.9	1002	7.0	983	3.2	12	1002	3.1	208.240	-S3100	50-P80/M4	
6.7	1021	2.0	0.7	785	2.8	1021	6.7	1021	2.0	12	1041	2.0	216.215	-S2100	50-P80/M4	
6.3	1081	2.9	0.6	832	2.6	1081	6.3	1081	2.9	11	1102	2.8	229.059	-S3100	50-P80/M4	
6.3	1082	0.9	0.6	833	2.6	1082	6.3	1082	0.9	11	1103	0.9	229.289	-S950	50-P80/M4	
6.1	1125	3.0	0.6	865	2.5	1125	6.1	1125	3.0	11	1147	2.9	238.252	-S4500	50-P80/M4	
5.8	1188	1.7	0.6	914	2.4	1188	5.8	1188	1.7	10	1212	1.7	251.778	-S2100	50-P80/M4	
5.6	1223	2.5	0.6	941	2.3	1223	5.6	1223	2.5	9.9	1247	2.5	259.030	-S3100	50-P80/M4	
5.5	1255	3.0	0.5	966	2.3	1255	5.5	1255	3.0	9.6	1280	2.9	265.956	-S4500	50-P80/M4	
5.2	1321	1.6	0.5	1016	2.1	1321	5.2	1321	1.6	9.1	1347	1.5	279.807	-S2100	50-P80/M4	
5.0	1365	2.6	0.5	1050	2.1	1365	5.0	1365	2.6	8.9	1392	2.6	289.151	-S4500	50-P80/M4	
4.9	1399	2.2	0.5	1077	2.0	1399	4.9	1399	2.2	8.6	1427	2.2	296.430	-S3100	50-P80/M4	
4.7	1442	1.4	0.5	1110	2.0	1442	4.7	1442	1.4	8.4	1471	1.4	305.567	-S2100	50-P80/M4	
4.5	1524	2.6	0.4	1172	1.9	1524	4.5	1524	2.6	7.9	1553	2.6	322.773	-S4500	50-P80/M4	
4.3	1582	2.0	0.4	1217	1.8	1582	4.3	1582	2.0	7.6	1613	1.9	335.215	-S3100	50-P80/M4	
4.3	1603	1.3	0.4	1233	1.8	1603	4.3	1603	1.3	7.5	1634	1.3	339.584	-S2100	50-P80/M4	
4.0	1698	1.8	0.4	1307	1.7	1698	4.0	1698	1.8	7.1	1731	1.8	359.758	-S3100	50-P80/M4	
4.0	1725	2.1	0.4	1327	1.6	1725	4.0	1725	2.1	7.0	1759	2.0	365.500	-S4500	50-P80/M4	
3.8	1823	1.1	0.4	1403	1.6	1823	3.8	1823	1.1	6.6	1859	1.1	386.250	-S2100	50-P80/M4	
3.6	1920	1.6	0.4	1477	1.5	1920	3.6	1920	1.6	6.3	1958	1.6	406.829	-S3100	50-P80/M4	
3.6	1926	2.1	0.4	1482	1.5	1926	3.6	1926	2.1	6.3	1964	2.0	408.000	-S4500	50-P80/M4	
3.4	2026	1.0	0.3	1559	1.4	2026	3.4	2026	1.0	6.0	2066	1.0	429.250	-S2100	50-P80/M4	

Selection tables, 4-pole motors

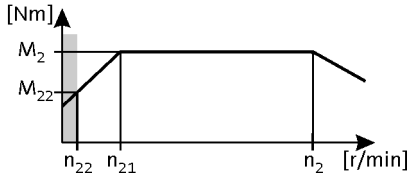

50 Hz: P_N = 1.1 kW
87 Hz: P_N = 1.9 kW

2-stage gearboxes

Mains operation 400 V, 50 Hz			Inverter operation 5 Hz -		- 20 ... 25 Hz		- 50 Hz (1:10)			- 87 Hz (1:17.4)			i	Product		
n_2 [r/min]	M_2 [Nm]	c	n_{22} [r/min]	M_{22} [Nm]	n_{21} [r/min]	M_2 [Nm]	n_2 [r/min]	M_2 [Nm]	c	n_2 [r/min]	M_2 [Nm]	c		g500	m5□□	
433	24	5.9	43	17	180	23	433	24	5.9	764	23	5.0	3.339	-S400	50-P90/M4	
394	26	2.4	40	18	164	25	394	26	2.4	697	25	2.1	3.661	-S130	50-P90/M4	
376	27	5.9	38	19	156	27	376	27	5.9	664	27	5.0	3.840	-S220	50-P90/M4	
315	32	5.9	32	23	131	32	315	32	5.9	557	32	5.0	4.579	-S400	50-P90/M4	
288	35	2.1	29	25	120	35	288	35	2.1	508	35	1.8	5.021	-S130	50-P90/M4	
274	37	4.9	28	26	114	36	274	37	4.9	484	36	4.2	5.267	-S220	50-P90/M4	
246	41	5.5	25	29	102	40	246	41	5.5	435	40	4.7	5.860	-S400	50-P90/M4	
225	45	5.5	23	32	94	44	225	45	5.5	398	44	4.7	6.411	-S400	50-P90/M4	
225	45	1.9	23	32	93	44	225	45	1.9	397	44	1.6	6.425	-S130	50-P90/M4	
213	48	4.6	21	34	89	47	213	48	4.6	377	47	4.0	6.767	-S220	50-P90/M4	
210	49	5.8	21	34	87	47	210	49	5.8	371	47	5.0	6.880	-S660	50-P90/M4	
205	50	1.9	21	35	85	49	205	50	1.9	363	49	1.6	7.029	-S130	50-P90/M4	
193	53	5.9	19	37	80	52	193	53	5.9	342	52	5.0	7.467	-S400	50-P90/M4	
188	54	4.0	19	38	78	53	188	54	4.0	333	53	3.4	7.667	-S220	50-P90/M4	
188	54	5.8	19	38	78	53	188	54	5.8	331	53	5.0	7.702	-S950	50-P90/M4	
174	59	2.0	17	41	72	57	174	59	2.0	306	57	1.7	8.322	-S130	50-P90/M4	
171	60	5.9	17	42	71	58	171	60	5.9	302	58	5.0	8.436	-S400	50-P90/M4	
156	65	3.4	16	46	65	64	156	65	3.4	275	64	2.9	9.280	-S220	50-P90/M4	
153	66	1.9	15	47	64	65	153	66	1.9	271	65	1.6	9.411	-S130	50-P90/M4	
141	72	5.5	14	51	59	71	141	72	5.5	249	71	4.7	10.240	-S400	50-P90/M4	
137	74	3.0	14	52	57	73	137	74	3.0	243	73	2.5	10.514	-S220	50-P90/M4	
128	79	5.8	13	56	53	78	128	79	5.8	226	78	5.0	11.262	-S660	50-P90/M4	
127	81	1.6	13	57	53	79	127	81	1.6	223	79	1.4	11.413	-S130	50-P90/M4	
125	82	4.9	13	57	52	80	125	82	4.9	220	80	4.2	11.569	-S400	50-P90/M4	
122	84	2.6	12	59	51	82	122	84	2.6	215	82	2.3	11.876	-S220	50-P90/M4	
117	87	5.9	12	61	49	85	117	87	5.9	207	85	5.0	12.320	-S660	50-P90/M4	
113	91	5.8	11	64	47	89	113	91	5.8	199	89	5.0	12.832	-S660	50-P90/M4	
112	91	1.4	11	64	47	89	112	91	1.4	198	89	1.2	12.907	-S130	50-P90/M4	
111	92	2.4	11	64	46	90	111	92	2.4	196	90	2.1	12.992	-S220	50-P90/M4	
110	92	4.3	11	65	46	90	110	92	4.3	195	90	3.7	13.105	-S400	50-P90/M4	
107	95	2.3	11	67	45	93	107	95	2.3	190	93	2.0	13.456	-S220	50-P90/M4	
103	99	5.9	10	70	43	97	103	99	5.9	182	97	5.0	14.037	-S660	50-P90/M4	
101	101	4.0	10	71	42	101	101	101	4.0	178	99	3.4	14.336	-S400	50-P90/M4	
99	103	1.3	9.9	72	41	101	99	103	1.3	175	101	1.1	14.606	-S130	50-P90/M4	
98	104	2.1	9.9	73	41	102	98	104	2.1	173	102	1.8	14.720	-S220	50-P90/M4	

Selection tables, 4-pole motors

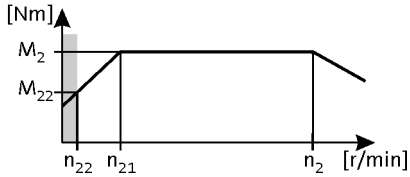

50 Hz: P_N = 1.1 kW
87 Hz: P_N = 1.9 kW

2-stage gearboxes

Mains operation 400 V, 50 Hz			Inverter operation 5 Hz -		- 20 ... 25 Hz		- 50 Hz (1:10)			- 87 Hz (1:17.4)			i	Product		
n_2 [r/min]	M_2 [Nm]	c	n_{22} [r/min]	M_{22} [Nm]	n_{21} [r/min]	M_2 [Nm]	n_2 [r/min]	M_2 [Nm]	c	n_2 [r/min]	M_2 [Nm]	c		g500	m5□□	
98	104	3.8	9.8	73	41	102	98	104	3.8	172	102	3.3	14.806	-S400	50-P90/M4	
92	111	5.5	9.2	78	38	108	92	111	5.5	162	108	4.7	15.714	-S660	50-P90/M4	
90	113	1.2	9.1	79	38	110	90	113	1.2	160	110	1.0	15.979	-S130	50-P90/M4	
90	113	5.8	9.1	79	38	110	90	113	5.8	159	110	5.0	16.000	-S950	50-P90/M4	
89	114	3.5	9.0	80	37	112	89	114	3.5	157	112	3.0	16.197	-S400	50-P90/M4	
87	117	1.9	8.8	82	36	114	87	117	1.9	154	114	1.6	16.571	-S220	50-P90/M4	
81	126	5.8	8.1	89	34	124	81	126	5.8	142	124	5.0	17.905	-S950	50-P90/M4	
81	126	5.2	8.1	89	34	124	81	126	5.2	142	124	4.5	17.905	-S660	50-P90/M4	
80	128	1.0	8.0	89	33	125	80	128	1.0	141	125	1.0	18.069	-S130	50-P90/M4	
79	129	3.1	7.9	91	33	126	79	129	3.1	140	126	3.0	18.286	-S400	50-P90/M4	
77	133	1.7	7.7	93	32	130	77	133	1.7	136	130	1.6	18.776	-S220	50-P90/M4	
75	136	4.8	7.5	95	31	133	75	136	4.8	133	133	4.7	19.250	-S660	50-P90/M4	
71	143	1.5	7.1	100	30	140	71	143	1.5	126	140	1.5	20.300	-S220	50-P90/M4	
71	144	0.9	7.1	101	29	141	71	144	0.9	125	141	0.9	20.381	-S130	50-P90/M4	
70	146	2.7	7.0	102	29	143	70	146	2.7	123	143	2.7	20.659	-S400	50-P90/M4	
66	155	4.3	6.6	109	27	151	66	155	4.3	116	151	4.2	21.933	-S660	50-P90/M4	
65	158	2.5	6.5	111	27	155	65	158	2.5	114	155	2.5	22.400	-S400	50-P90/M4	
63	162	1.4	6.3	114	26	159	63	162	1.4	111	159	1.3	23.000	-S220	50-P90/M4	
58	177	3.3	5.8	124	24	173	58	177	3.3	102	173	3.2	25.056	-S660	50-P90/M4	
57	179	2.2	5.7	125	24	175	57	179	2.2	101	175	2.2	25.308	-S400	50-P90/M4	
57	180	4.8	5.7	126	24	176	57	180	4.8	100	176	4.7	25.511	-S950	50-P90/M4	
55	186	1.2	5.5	131	23	182	55	186	1.2	97	182	1.2	26.422	-S220	50-P90/M4	
51	201	4.7	5.1	141	21	197	51	201	4.7	89	197	4.6	28.548	-S950	50-P90/M4	
51	201	3.3	5.1	141	21	197	51	201	3.3	89	197	3.2	28.548	-S660	50-P90/M4	
50	206	1.9	5.0	144	21	201	50	206	1.9	88	201	1.9	29.156	-S400	50-P90/M4	
48	211	1.0	4.8	148	20	207	48	211	1.0	85	207	1.0	29.937	-S220	50-P90/M4	
46	220	3.0	4.7	154	19	215	46	220	3.0	82	215	3.1	31.167	-S660	50-P90/M4	
46	221	4.0	4.6	155	19	216	46	221	4.0	82	216	4.1	31.267	-S950	50-P90/M4	
44	232	1.0	4.4	163	18	227	44	232	1.0	78	227	1.0	32.867	-S220	50-P90/M4	
44	232	1.7	4.4	163	18	227	44	232	1.7	77	227	1.8	32.940	-S400	50-P90/M4	
41	247	3.9	4.1	173	17	242	41	247	3.9	73	242	3.9	34.989	-S950	50-P90/M4	
41	251	2.6	4.1	176	17	245	41	251	2.6	72	245	2.7	35.511	-S660	50-P90/M4	
40	256	1.6	4.0	180	17	250	40	256	1.6	70	250	1.6	36.267	-S400	50-P90/M4	
39	263	0.8	3.9	184	16	257	39	263	0.8	69	257	0.9	37.238	-S220	50-P90/M4	
36	285	1.9	3.6	200	15	278	36	285	1.9	63	278	2.0	40.333	-S660	50-P90/M4	

Selection tables, 4-pole motors

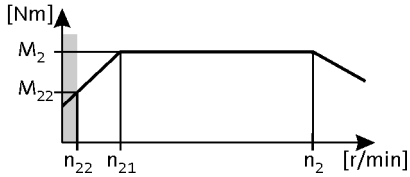

50 Hz: P_N = 1.1 kW
87 Hz: P_N = 1.9 kW

2-stage gearboxes

Mains operation 400 V, 50 Hz			Inverter operation 5 Hz -		- 20 ... 25 Hz		- 50 Hz (1:10)			- 87 Hz (1:17.4)			i	Product		
n_2 [r/min]	M_2 [Nm]	c	n_{22} [r/min]	M_{22} [Nm]	n_{21} [r/min]	M_2 [Nm]	n_2 [r/min]	M_2 [Nm]	c	n_2 [r/min]	M_2 [Nm]	c		g500	m5□□	
35	289	1.4	3.5	203	15	283	35	289	1.4	62	283	1.4	40.974	-S400	50-P90/M4	
35	290	3.3	3.5	203	15	283	35	290	3.3	62	283	3.4	41.067	-S950	50-P90/M4	
33	314	4.0	3.3	220	14	307	33	314	4.0	57	307	4.1	44.431	-S2100	50-P90/M4	
31	324	2.9	3.2	227	13	317	31	324	2.9	56	317	3.0	45.956	-S950	50-P90/M4	
31	324	1.9	3.2	227	13	317	31	324	1.9	56	317	2.0	45.956	-S660	50-P90/M4	
30	345	1.3	3.0	242	12	338	30	345	1.3	52	338	1.3	48.950	-S660	50-P90/M4	
29	348	4.0	2.9	244	12	341	29	348	4.0	52	341	4.1	49.378	-S2100	50-P90/M4	
29	352	2.6	2.9	247	12	344	29	352	2.6	51	344	2.7	49.840	-S950	50-P90/M4	
28	369	4.0	2.8	259	12	361	28	369	4.0	49	361	4.1	52.311	-S3100	50-P90/M4	
27	381	3.5	2.7	267	11	372	27	381	3.5	47	372	3.6	53.924	-S2100	50-P90/M4	
26	394	2.4	2.6	276	11	385	26	394	2.4	46	385	2.5	55.773	-S950	50-P90/M4	
26	394	1.3	2.6	276	11	385	26	394	1.3	46	385	1.3	55.773	-S660	50-P90/M4	
24	418	4.0	2.5	293	10	408	24	418	4.0	43	408	4.1	59.156	-S3100	50-P90/M4	
24	423	3.5	2.4	297	10	414	24	423	3.5	43	414	3.6	59.927	-S2100	50-P90/M4	
23	445	1.5	2.3	312	9.5	435	23	445	1.5	41	435	1.5	63.000	-S950	50-P90/M4	
23	448	3.5	2.3	314	9.5	438	23	448	3.5	40	438	3.6	63.487	-S3100	50-P90/M4	
21	481	2.7	2.1	337	8.8	471	21	481	2.7	37	471	2.8	68.162	-S2100	50-P90/M4	
21	498	1.5	2.1	349	8.5	487	21	498	1.5	36	487	1.5	70.500	-S950	50-P90/M4	
20	507	3.5	2.0	355	8.4	496	20	507	3.5	36	496	3.6	71.793	-S3100	50-P90/M4	
19	535	2.7	1.9	375	7.9	523	19	535	2.7	34	523	2.8	75.750	-S2100	50-P90/M4	

3-stage gearboxes

Mains operation 400 V, 50 Hz			Inverter operation 5 Hz -		- 20 ... 25 Hz		- 50 Hz (1:10)			- 87 Hz (1:17.4)			i	Product		
n_2 [r/min]	M_2 [Nm]	c	n_{22} [r/min]	M_{22} [Nm]	n_{21} [r/min]	M_2 [Nm]	n_2 [r/min]	M_2 [Nm]	c	n_2 [r/min]	M_2 [Nm]	c		g500	m5□□	
29	347	1.8	2.9	243	12	339	29	347	1.8	51	339	1.8	49.867	-S660	50-P90/M4	
29	348	2.7	2.9	244	12	340	29	348	2.7	51	340	2.7	50.027	-S950	50-P90/M4	
26	389	2.4	2.6	273	11	381	26	389	2.4	46	381	2.4	55.982	-S950	50-P90/M4	
25	395	1.7	2.6	277	11	386	25	395	1.7	45	386	1.6	56.818	-S660	50-P90/M4	
23	444	1.5	2.3	311	9.4	434	23	444	1.5	40	434	1.5	63.817	-S660	50-P90/M4	
23	445	2.1	2.3	312	9.4	435	23	445	2.1	40	435	2.1	64.022	-S950	50-P90/M4	
21	485	1.4	2.1	340	8.6	475	21	485	1.4	37	475	1.3	69.813	-S660	50-P90/M4	
21	487	2.0	2.1	341	8.6	476	21	487	2.0	36	476	2.0	70.037	-S950	50-P90/M4	
21	489	4.2	2.1	343	8.5	478	21	489	4.2	36	478	4.3	70.302	-S2100	50-P90/M4	
20	498	1.9	2.0	349	8.4	487	20	498	1.9	36	487	2.0	71.644	-S950	50-P90/M4	
20	505	1.3	2.0	354	8.3	494	20	505	1.3	35	494	1.3	72.713	-S660	50-P90/M4	
19	535	3.8	1.9	375	7.8	523	19	535	3.8	33	523	3.9	76.907	-S2100	50-P90/M4	
19	543	3.8	1.9	381	7.7	531	19	543	3.8	33	531	3.9	78.128	-S2100	50-P90/M4	
18	545	1.7	1.9	382	7.7	533	18	545	1.7	33	533	1.8	78.375	-S950	50-P90/M4	
18	553	1.2	1.8	388	7.5	541	18	553	1.2	32	541	1.2	79.545	-S660	50-P90/M4	

Selection tables, 4-pole motors

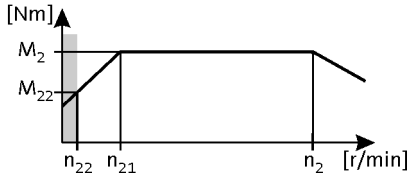

50 Hz: P_N = 1.1 kW
87 Hz: P_N = 1.9 kW

3-stage gearboxes

Mains operation 400 V, 50 Hz			Inverter operation 5 Hz -		- 20 ... 25 Hz		- 50 Hz (1:10)			- 87 Hz (1:17.4)			i	Product		
n_2 [r/min]	M_2 [Nm]	c	n_{22} [r/min]	M_{22} [Nm]	n_{21} [r/min]	M_2 [Nm]	n_2 [r/min]	M_2 [Nm]	c	n_2 [r/min]	M_2 [Nm]	c		g500	m5□□	
17	575	5.4	1.8	403	7.2	563	17	575	5.4	31	563	5.5	82.769	-S3100	50-P90/M4	
17	594	3.5	1.7	417	7.0	581	17	594	3.5	30	581	3.5	85.468	-S2100	50-P90/M4	
16	619	1.1	1.6	434	6.7	606	16	619	1.1	29	606	1.1	89.048	-S660	50-P90/M4	
16	621	1.5	1.6	435	6.7	607	16	621	1.5	29	607	1.6	89.333	-S950	50-P90/M4	
16	629	4.9	1.6	441	6.6	616	16	629	4.9	28	616	5.0	90.546	-S3100	50-P90/M4	
16	645	5.8	1.6	452	6.5	631	16	645	5.8	28	631	5.9	92.825	-S4500	50-P90/M4	
15	651	4.8	1.5	456	6.4	636	15	651	4.8	27	636	4.9	93.599	-S3100	50-P90/M4	
15	682	3.0	1.5	478	6.1	667	15	682	3.0	26	667	3.1	98.095	-S2100	50-P90/M4	
14	695	1.4	1.5	487	6.0	680	14	695	1.4	26	680	1.4	99.968	-S950	50-P90/M4	
14	705	0.9	1.4	495	5.9	690	14	705	0.9	25	690	1.0	101.460	-S660	50-P90/M4	
14	712	4.4	1.4	499	5.9	696	14	712	4.4	25	696	4.5	102.393	-S3100	50-P90/M4	
14	720	5.8	1.4	505	5.8	705	14	720	5.8	25	705	5.9	103.619	-S4500	50-P90/M4	
13	758	2.7	1.3	531	5.5	741	13	758	2.7	23	741	2.8	109.016	-S2100	50-P90/M4	
13	758	0.9	1.3	532	5.5	742	13	758	0.9	23	742	0.9	109.083	-S660	50-P90/M4	
13	761	1.3	1.3	533	5.5	744	13	761	1.3	23	744	1.3	109.433	-S950	50-P90/M4	
13	803	3.9	1.3	563	5.2	785	13	803	3.9	22	785	4.0	115.492	-S3100	50-P90/M4	
12	835	2.5	1.2	586	5.0	817	12	835	2.5	21	817	2.5	120.167	-S2100	50-P90/M4	
12	851	1.1	1.2	597	4.9	833	12	851	1.1	21	833	1.1	122.461	-S950	50-P90/M4	
11	908	3.4	1.1	637	4.6	888	11	908	3.4	20	888	3.5	130.603	-S3100	50-P90/M4	
11	928	2.2	1.1	651	4.5	908	11	928	2.2	19	908	2.3	133.544	-S2100	50-P90/M4	
10	984	3.2	1.0	690	4.2	962	10	984	3.2	18	962	3.2	141.478	-S3100	50-P90/M4	
10	990	1.0	1.0	694	4.2	969	10	990	1.0	18	969	1.0	142.437	-S950	50-P90/M4	
9.8	1029	4.4	1.0	721	4.1	1006	9.8	1029	4.4	17	1006	4.5	148.005	-S4500	50-P90/M4	
9.2	1087	1.9	0.9	762	3.8	1064	9.2	1087	1.9	16	1064	1.9	156.407	-S2100	50-P90/M4	
9.1	1108	0.9	0.9	777	3.8	1084	9.1	1108	0.9	16	1084	0.9	159.394	-S950	50-P90/M4	
9.0	1112	2.8	0.9	780	3.8	1088	9.0	1112	2.8	16	1088	2.9	159.989	-S3100	50-P90/M4	
8.7	1149	3.9	0.9	805	3.6	1123	8.7	1149	3.9	15	1123	4.0	165.215	-S4500	50-P90/M4	
8.3	1208	1.7	0.8	847	3.5	1182	8.3	1208	1.7	15	1182	1.7	173.820	-S2100	50-P90/M4	
8.0	1261	3.6	0.8	884	3.3	1233	8.0	1261	3.6	14	1233	3.7	181.396	-S4500	50-P90/M4	
7.8	1280	2.4	0.8	898	3.3	1252	7.8	1280	2.4	14	1252	2.5	184.146	-S3100	50-P90/M4	
7.4	1353	1.5	0.7	948	3.1	1323	7.4	1353	1.5	13	1323	1.6	194.556	-S2100	50-P90/M4	
7.1	1408	3.2	0.7	987	3.0	1377	7.1	1408	3.2	13	1377	3.3	202.489	-S4500	50-P90/M4	
6.9	1448	2.1	0.7	1015	2.9	1416	6.9	1448	2.1	12	1416	2.2	208.240	-S3100	50-P90/M4	
6.7	1503	1.4	0.7	1054	2.8	1470	6.7	1503	1.4	12	1470	1.4	216.215	-S2100	50-P90/M4	
6.3	1592	2.0	0.6	1116	2.6	1558	6.3	1592	2.0	11	1558	2.0	229.059	-S3100	50-P90/M4	

Selection tables, 4-pole motors

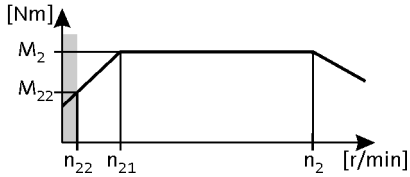

50 Hz: P_N = 1.1 kW
87 Hz: P_N = 1.9 kW

3-stage gearboxes

Mains operation 400 V, 50 Hz			Inverter operation 5 Hz -		- 20 ... 25 Hz		- 50 Hz (1:10)			- 87 Hz (1:17.4)			i	Product		
n_2 [r/min]	M_2 [Nm]	c	n_{22} [r/min]	M_{22} [Nm]	n_{21} [r/min]	M_2 [Nm]	n_2 [r/min]	M_2 [Nm]	c	n_2 [r/min]	M_2 [Nm]	c		g500	m5□□	
6.1	1656	2.7	0.6	1161	2.5	1620	6.1	1656	2.7	11	1620	2.8	238.252	-S4500	50-P90/M4	
5.7	1750	1.2	0.6	1227	2.4	1712	5.7	1750	1.2	10	1712	1.2	251.778	-S2100	50-P90/M4	
5.6	1801	1.7	0.6	1263	2.3	1761	5.6	1801	1.7	9.8	1761	1.8	259.030	-S3100	50-P90/M4	
5.4	1849	2.4	0.5	1296	2.3	1808	5.4	1849	2.4	9.6	1808	2.5	265.956	-S4500	50-P90/M4	
5.2	1945	1.1	0.5	1364	2.1	1903	5.2	1945	1.1	9.1	1903	1.1	279.807	-S2100	50-P90/M4	
5.0	2010	2.2	0.5	1409	2.1	1966	5.0	2010	2.2	8.8	1966	2.3	289.151	-S4500	50-P90/M4	
4.9	2061	1.5	0.5	1445	2.0	2016	4.9	2061	1.5	8.6	2016	1.5	296.430	-S3100	50-P90/M4	
4.7	2124	1.0	0.5	1489	2.0	2078	4.7	2124	1.0	8.3	2078	1.0	305.567	-S2100	50-P90/M4	
4.5	2244	2.0	0.4	1573	1.9	2195	4.5	2244	2.0	7.9	2195	2.1	322.773	-S4500	50-P90/M4	
4.3	2330	1.3	0.4	1634	1.8	2279	4.3	2330	1.3	7.6	2279	1.4	335.215	-S3100	50-P90/M4	
4.3	2361	0.9	0.4	1655	1.8	2309	4.3	2361	0.9	7.5	2309	0.9	339.584	-S2100	50-P90/M4	
4.0	2501	1.2	0.4	1753	1.7	2446	4.0	2501	1.2	7.1	2446	1.3	359.758	-S3100	50-P90/M4	
4.0	2541	1.6	0.4	1781	1.6	2485	4.0	2541	1.6	7.0	2485	1.6	365.500	-S4500	50-P90/M4	
3.5	2828	1.1	0.4	1983	1.5	2766	3.5	2828	1.1	6.3	2766	1.1	406.829	-S3100	50-P90/M4	
3.5	2836	1.6	0.4	1989	1.5	2774	3.5	2836	1.6	6.3	2774	1.6	408.000	-S4500	50-P90/M4	

Selection tables, 4-pole motors

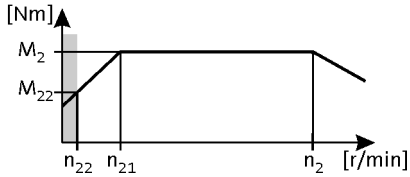

50 Hz: P_N = 1.5 kW
87 Hz: P_N = 2.6 kW

2-stage gearboxes

Mains operation 400 V, 50 Hz			Inverter operation 5 Hz -		- 20 ... 25 Hz		- 50 Hz (1:10)			- 87 Hz (1:17.4)			i	Product		
n_2 [r/min]	M_2 [Nm]	c	n_{22} [r/min]	M_{22} [Nm]	n_{21} [r/min]	M_2 [Nm]	n_2 [r/min]	M_2 [Nm]	c	n_2 [r/min]	M_2 [Nm]	c		g500	m5□□	
432	32	4.3	43	23	180	32	432	32	4.3	764	32	3.7	3.339	-S400	50-P90/L4	
394	35	1.8	40	25	164	35	394	35	1.8	697	35	1.5	3.661	-S130	50-P90/L4	
376	37	4.3	38	26	156	36	376	37	4.3	665	36	3.7	3.840	-S220	50-P90/L4	
315	44	4.3	32	31	131	43	315	44	4.3	557	43	3.7	4.579	-S400	50-P90/L4	
287	48	1.6	29	34	120	47	287	48	1.6	508	47	1.3	5.021	-S130	50-P90/L4	
274	51	3.6	28	36	114	50	274	51	3.6	485	50	3.1	5.267	-S220	50-P90/L4	
246	56	4.0	25	40	102	55	246	56	4.0	436	55	3.4	5.860	-S400	50-P90/L4	
225	62	4.0	23	44	94	61	225	62	4.0	398	61	3.4	6.411	-S400	50-P90/L4	
224	62	1.4	23	44	93	61	224	62	1.4	397	61	1.2	6.425	-S130	50-P90/L4	
213	65	3.4	21	46	89	64	213	65	3.4	377	64	2.9	6.767	-S220	50-P90/L4	
210	66	4.2	21	47	87	65	210	66	4.2	371	65	3.6	6.880	-S660	50-P90/L4	
205	68	1.4	21	48	85	66	205	68	1.4	363	66	1.2	7.029	-S130	50-P90/L4	
193	72	4.3	19	51	80	70	193	72	4.3	342	70	3.7	7.467	-S400	50-P90/L4	
188	74	2.9	19	52	78	72	188	74	2.9	333	72	2.5	7.667	-S220	50-P90/L4	
187	74	4.2	19	52	78	73	187	74	4.2	331	73	3.6	7.702	-S950	50-P90/L4	
173	80	1.5	17	57	72	80	173	80	1.5				8.322	-S130	50-P90/L4	
171	81	4.3	17	57	71	80	171	81	4.3	303	80	3.7	8.436	-S400	50-P90/L4	
155	89	2.5	16	63	65	88	155	89	2.5	275	88	2.1	9.280	-S220	50-P90/L4	
153	91	1.4	15	64	64	91	153	91	1.4				9.411	-S130	50-P90/L4	
141	99	4.1	14	70	59	97	141	99	4.1	249	97	3.5	10.240	-S400	50-P90/L4	
137	101	2.2	14	71	57	101	137	101	2.2	243	99	1.9	10.514	-S220	50-P90/L4	
128	109	4.2	13	77	53	106	128	109	4.2	227	106	3.6	11.262	-S660	50-P90/L4	
126	110	1.2	13	78	53	110	126	110	1.2				11.413	-S130	50-P90/L4	
125	111	3.6	13	79	52	109	125	111	3.6	221	109	3.1	11.569	-S400	50-P90/L4	
121	114	1.9	12	81	51	112	121	114	1.9	215	112	1.6	11.876	-S220	50-P90/L4	
117	119	4.3	12	84	49	116	117	119	4.3	207	116	3.7	12.320	-S660	50-P90/L4	
112	124	4.2	11	87	47	121	112	124	4.2	199	121	3.6	12.832	-S660	50-P90/L4	
112	124	1.1	11	88	47	124	112	124	1.1				12.907	-S130	50-P90/L4	
111	125	1.8	11	88	46	123	111	125	1.8	196	123	1.5	12.992	-S220	50-P90/L4	
110	126	3.2	11	89	46	124	110	126	3.2	195	124	2.7	13.105	-S400	50-P90/L4	
107	130	1.7	11	91	45	127	107	130	1.7	190	127	1.5	13.456	-S220	50-P90/L4	
103	135	4.3	10	95	43	133	103	135	4.3	182	133	3.7	14.037	-S660	50-P90/L4	
101	138	2.9	10	97	42	135	101	138	2.9	178	135	2.5	14.336	-S400	50-P90/L4	
99	141	0.9	9.9	99	41	141	99	141	0.9				14.606	-S130	50-P90/L4	
98	142	1.6	9.9	100	41	139	98	142	1.6	173	139	1.3	14.720	-S220	50-P90/L4	

Selection tables, 4-pole motors

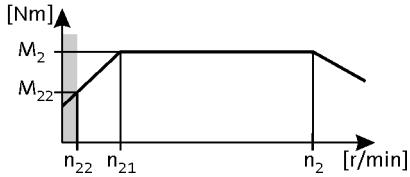

50 Hz: P_N = 1.5 kW
87 Hz: P_N = 2.6 kW

2-stage gearboxes

Mains operation 400 V, 50 Hz			Inverter operation 5 Hz -		- 20 ... 25 Hz		- 50 Hz (1:10)			- 87 Hz (1:17.4)			i	Product		
n_2 [r/min]	M_2 [Nm]	c	n_{22} [r/min]	M_{22} [Nm]	n_{21} [r/min]	M_2 [Nm]	n_2 [r/min]	M_2 [Nm]	c	n_2 [r/min]	M_2 [Nm]	c		g500	m5□□	
97	143	2.8	9.8	101	41	140	97	143	2.8	172	140	2.4	14.806	-S400	50-P90/L4	
92	151	4.0	9.2	107	38	148	92	151	4.0	162	148	3.4	15.714	-S660	50-P90/L4	
90	154	0.8	9.1	109	38	154	90	154	0.8				15.979	-S130	50-P90/L4	
90	154	4.2	9.1	109	38	151	90	154	4.2	160	151	3.6	16.000	-S950	50-P90/L4	
89	156	2.6	9.0	110	37	153	89	156	2.6	158	153	2.2	16.197	-S400	50-P90/L4	
87	160	1.4	8.8	113	36	156	87	160	1.4	154	156	1.2	16.571	-S220	50-P90/L4	
81	173	4.2	8.1	122	34	169	81	173	4.2	143	169	3.6	17.905	-S950	50-P90/L4	
81	173	3.8	8.1	122	34	169	81	173	3.8	143	169	3.3	17.905	-S660	50-P90/L4	
79	176	2.3	7.9	124	33	173	79	176	2.3	140	173	2.2	18.286	-S400	50-P90/L4	
77	181	1.2	7.7	128	32	177	77	181	1.2	136	177	1.2	18.776	-S220	50-P90/L4	
75	186	3.5	7.5	131	31	182	75	186	3.5	133	182	3.4	19.250	-S660	50-P90/L4	
71	196	1.1	7.1	138	30	192	71	196	1.1	126	192	1.1	20.300	-S220	50-P90/L4	
70	199	2.0	7.0	140	29	195	70	199	2.0	124	195	2.0	20.659	-S400	50-P90/L4	
66	211	3.1	6.6	149	27	207	66	211	3.1	116	207	3.0	21.933	-S660	50-P90/L4	
64	216	1.9	6.5	152	27	211	64	216	1.9	114	211	1.8	22.400	-S400	50-P90/L4	
63	222	1.0	6.3	156	26	217	63	222	1.0	111	217	1.0	23.000	-S220	50-P90/L4	
58	241	2.4	5.8	170	24	237	58	241	2.4	102	237	2.3	25.056	-S660	50-P90/L4	
57	244	1.6	5.7	172	24	239	57	244	1.6	101	239	1.6	25.308	-S400	50-P90/L4	
57	246	3.5	5.7	173	24	241	57	246	3.5	100	241	3.4	25.511	-S950	50-P90/L4	
55	255	0.9	5.5	179	23	249	55	255	0.9	97	249	0.8	26.422	-S220	50-P90/L4	
51	275	3.5	5.1	194	21	269	51	275	3.5	89	269	3.4	28.548	-S950	50-P90/L4	
51	275	2.4	5.1	194	21	269	51	275	2.4	89	269	2.3	28.548	-S660	50-P90/L4	
50	281	1.4	5.0	198	21	275	50	281	1.4	88	275	1.4	29.156	-S400	50-P90/L4	
46	300	2.2	4.7	212	19	294	46	300	2.2	82	294	2.2	31.167	-S660	50-P90/L4	
46	301	2.9	4.6	212	19	295	46	301	2.9	82	295	3.0	31.267	-S950	50-P90/L4	
44	317	1.3	4.4	224	18	311	44	317	1.3	78	311	1.3	32.940	-S400	50-P90/L4	
41	337	2.8	4.1	238	17	330	41	337	2.8	73	330	2.9	34.989	-S950	50-P90/L4	
41	342	1.9	4.1	241	17	335	41	342	1.9	72	335	2.0	35.511	-S660	50-P90/L4	
40	350	1.1	4.0	246	17	342	40	350	1.1	70	342	1.2	36.267	-S400	50-P90/L4	
36	389	1.4	3.6	274	15	381	36	389	1.4	63	381	1.4	40.333	-S660	50-P90/L4	
35	395	1.0	3.5	278	15	387	35	395	1.0	62	387	1.0	40.974	-S400	50-P90/L4	
35	396	2.4	3.5	279	15	388	35	396	2.4	62	388	2.5	41.067	-S950	50-P90/L4	
33	428	2.9	3.3	302	14	419	33	428	2.9	57	419	3.0	44.431	-S2100	50-P90/L4	
31	443	2.1	3.2	312	13	434	31	443	2.1	56	434	2.2	45.956	-S950	50-P90/L4	
31	443	1.4	3.2	312	13	434	31	443	1.4	56	434	1.4	45.956	-S660	50-P90/L4	

Selection tables, 4-pole motors

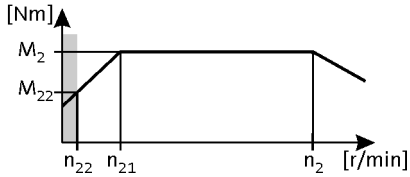

50 Hz: P_N = 1.5 kW
87 Hz: P_N = 2.6 kW

2-stage gearboxes

Mains operation 400 V, 50 Hz			Inverter operation 5 Hz -		- 20 ... 25 Hz		- 50 Hz (1:10)			- 87 Hz (1:17.4)			i	Product		
n_2 [r/min]	M_2 [Nm]	c	n_{22} [r/min]	M_{22} [Nm]	n_{21} [r/min]	M_2 [Nm]	n_2 [r/min]	M_2 [Nm]	c	n_2 [r/min]	M_2 [Nm]	c		g500	m5□□	
30	472	1.0	3.0	332	12	462	30	472	1.0	52	462	1.0	48.950	-S660	50-P90/L4	
29	476	2.9	2.9	335	12	466	29	476	2.9	52	466	3.0	49.378	-S2100	50-P90/L4	
29	480	1.9	2.9	339	12	470	29	480	1.9	51	470	2.0	49.840	-S950	50-P90/L4	
28	504	2.9	2.8	355	12	494	28	504	2.9	49	494	3.0	52.311	-S3100	50-P90/L4	
27	520	2.6	2.7	366	11	509	27	520	2.6	47	509	2.6	53.924	-S2100	50-P90/L4	
26	538	1.8	2.6	379	11	526	26	538	1.8	46	526	1.8	55.773	-S950	50-P90/L4	
26	538	1.0	2.6	379	11	526	26	538	1.0	46	526	1.0	55.773	-S660	50-P90/L4	
24	570	2.9	2.5	402	10	558	24	570	2.9	43	558	3.0	59.156	-S3100	50-P90/L4	
24	578	2.6	2.4	407	10	566	24	578	2.6	43	566	2.6	59.927	-S2100	50-P90/L4	
23	607	1.1	2.3	428	9.5	595	23	607	1.1	41	595	1.1	63.000	-S950	50-P90/L4	
23	612	2.6	2.3	431	9.5	599	23	612	2.6	40	599	2.6	63.487	-S3100	50-P90/L4	
21	657	2.0	2.1	463	8.8	643	21	657	2.0	37	643	2.0	68.162	-S2100	50-P90/L4	
21	679	1.1	2.1	479	8.5	665	21	679	1.1	36	665	1.1	70.500	-S950	50-P90/L4	
20	692	2.6	2.0	488	8.4	678	20	692	2.6	36	678	2.6	71.793	-S3100	50-P90/L4	
19	730	2.0	1.9	515	7.9	715	19	730	2.0	34	715	2.0	75.750	-S2100	50-P90/L4	

3-stage gearboxes

Mains operation 400 V, 50 Hz			Inverter operation 5 Hz -		- 20 ... 25 Hz		- 50 Hz (1:10)			- 87 Hz (1:17.4)			i	Product		
n_2 [r/min]	M_2 [Nm]	c	n_{22} [r/min]	M_{22} [Nm]	n_{21} [r/min]	M_2 [Nm]	n_2 [r/min]	M_2 [Nm]	c	n_2 [r/min]	M_2 [Nm]	c		g500	m5□□	
29	473	1.3	2.9	334	12	464	29	473	1.3	51	464	1.3	49.867	-S660	50-P90/L4	
29	475	2.0	2.9	335	12	465	29	475	2.0	51	465	1.9	50.027	-S950	50-P90/L4	
26	531	1.8	2.6	375	11	521	26	531	1.8	46	521	1.7	55.982	-S950	50-P90/L4	
25	539	1.2	2.6	380	11	528	25	539	1.2	45	528	1.2	56.818	-S660	50-P90/L4	
23	606	1.1	2.3	427	9.4	593	23	606	1.1	40	593	1.1	63.817	-S660	50-P90/L4	
23	608	1.6	2.3	428	9.4	595	23	608	1.6	40	595	1.5	64.022	-S950	50-P90/L4	
21	663	1.0	2.1	467	8.6	649	21	663	1.0	37	649	1.0	69.813	-S660	50-P90/L4	
21	665	1.4	2.1	469	8.6	651	21	665	1.4	36	651	1.5	70.037	-S950	50-P90/L4	
21	667	3.1	2.1	470	8.5	654	21	667	3.1	36	654	3.1	70.302	-S2100	50-P90/L4	
20	680	1.4	2.0	479	8.4	666	20	680	1.4	36	666	1.4	71.644	-S950	50-P90/L4	
20	690	1.0	2.0	486	8.3	676	20	690	1.0	35	676	1.0	72.713	-S660	50-P90/L4	
19	742	2.8	1.9	523	7.7	726	19	742	2.8	33	726	2.8	78.128	-S2100	50-P90/L4	
18	744	1.3	1.9	524	7.7	729	18	744	1.3	33	729	1.3	78.375	-S950	50-P90/L4	
18	755	0.9	1.8	532	7.5	740	18	755	0.9	32	740	0.9	79.545	-S660	50-P90/L4	
17	786	4.0	1.8	554	7.2	770	17	786	4.0	31	770	4.0	82.769	-S3100	50-P90/L4	
17	811	2.5	1.7	572	7.0	795	17	811	2.5	30	795	2.6	85.468	-S2100	50-P90/L4	
16	848	1.1	1.6	598	6.7	831	16	848	1.1	29	831	1.1	89.333	-S950	50-P90/L4	
16	860	3.6	1.6	606	6.6	842	16	860	3.6	28	842	3.7	90.546	-S3100	50-P90/L4	
16	881	4.2	1.6	621	6.5	863	16	881	4.2	28	863	4.3	92.825	-S4500	50-P90/L4	
15	889	3.5	1.5	626	6.4	870	15	889	3.5	27	870	3.6	93.599	-S3100	50-P90/L4	

Selection tables, 4-pole motors

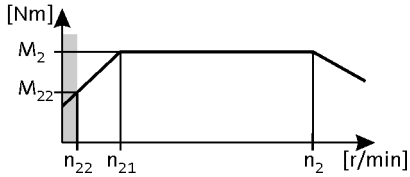

50 Hz: P_N = 1.5 kW
87 Hz: P_N = 2.6 kW

3-stage gearboxes

Mains operation 400 V, 50 Hz			Inverter operation 5 Hz -		- 20 ... 25 Hz		- 50 Hz (1:10)			- 87 Hz (1:17.4)			i	Product		
n_2 [r/min]	M_2 [Nm]	c	n_{22} [r/min]	M_{22} [Nm]	n_{21} [r/min]	M_2 [Nm]	n_2 [r/min]	M_2 [Nm]	c	n_2 [r/min]	M_2 [Nm]	c		g500	m5□□	
15	931	2.2	1.5	656	6.1	912	15	931	2.2	26	912	2.3	98.095	-S2100	50-P90/L4	
14	949	1.0	1.5	669	6.0	929	14	949	1.0	26	929	1.0	99.968	-S950	50-P90/L4	
14	972	3.2	1.4	685	5.9	952	14	972	3.2	25	952	3.3	102.393	-S3100	50-P90/L4	
14	984	4.2	1.4	693	5.8	963	14	984	4.2	25	963	4.3	103.619	-S4500	50-P90/L4	
13	1035	2.0	1.3	729	5.5	1014	13	1035	2.0	23	1014	2.0	109.016	-S2100	50-P90/L4	
13	1039	0.9	1.3	732	5.5	1017	13	1039	0.9	23	1017	0.9	109.433	-S950	50-P90/L4	
13	1096	2.8	1.3	773	5.2	1074	13	1096	2.8	22	1074	2.9	115.492	-S3100	50-P90/L4	
12	1141	1.8	1.2	804	5.0	1117	12	1141	1.8	21	1117	1.8	120.167	-S2100	50-P90/L4	
12	1163	0.8	1.2	819	4.9	1139	12	1163	0.8	21	1139	0.8	122.461	-S950	50-P90/L4	
11	1240	2.5	1.1	874	4.6	1214	11	1240	2.5	20	1214	2.6	130.603	-S3100	50-P90/L4	
11	1268	1.6	1.1	893	4.5	1242	11	1268	1.6	19	1242	1.7	133.544	-S2100	50-P90/L4	
10	1343	2.3	1.0	946	4.2	1315	10	1343	2.3	18	1315	2.4	141.478	-S3100	50-P90/L4	
9.7	1405	3.2	1.0	990	4.1	1376	9.7	1405	3.2	17	1376	3.3	148.005	-S4500	50-P90/L4	
9.2	1485	1.4	0.9	1046	3.8	1454	9.2	1485	1.4	16	1454	1.4	156.407	-S2100	50-P90/L4	
9.0	1519	2.0	0.9	1070	3.8	1488	9.0	1519	2.0	16	1488	2.1	159.989	-S3100	50-P90/L4	
8.7	1568	2.9	0.9	1105	3.6	1536	8.7	1568	2.9	15	1536	2.9	165.215	-S4500	50-P90/L4	
8.3	1650	1.2	0.8	1163	3.5	1616	8.3	1650	1.2	15	1616	1.3	173.820	-S2100	50-P90/L4	
7.9	1722	2.6	0.8	1214	3.3	1687	7.9	1722	2.6	14	1687	2.7	181.396	-S4500	50-P90/L4	
7.8	1748	1.8	0.8	1232	3.3	1712	7.8	1748	1.8	14	1712	1.8	184.146	-S3100	50-P90/L4	
7.4	1847	1.1	0.7	1302	3.1	1809	7.4	1847	1.1	13	1809	1.1	194.556	-S2100	50-P90/L4	
7.1	1922	2.3	0.7	1355	3.0	1883	7.1	1922	2.3	13	1883	2.4	202.489	-S4500	50-P90/L4	
6.9	1977	1.6	0.7	1393	2.9	1936	6.9	1977	1.6	12	1936	1.6	208.240	-S3100	50-P90/L4	
6.7	2053	1.0	0.7	1446	2.8	2010	6.7	2053	1.0	12	2010	1.0	216.215	-S2100	50-P90/L4	
6.3	2174	1.4	0.6	1532	2.6	2130	6.3	2174	1.4	11	2130	1.5	229.059	-S3100	50-P90/L4	
6.1	2262	2.0	0.6	1594	2.5	2215	6.1	2262	2.0	11	2215	2.0	238.252	-S4500	50-P90/L4	
5.7	2390	0.9	0.6	1684	2.4	2341	5.7	2390	0.9	10	2341	0.9	251.778	-S2100	50-P90/L4	
5.6	2459	1.3	0.6	1733	2.3	2408	5.6	2459	1.3	9.9	2408	1.3	259.030	-S3100	50-P90/L4	
5.4	2525	1.8	0.5	1779	2.3	2473	5.4	2525	1.8	9.6	2473	1.8	265.956	-S4500	50-P90/L4	
5.0	2745	1.6	0.5	1934	2.1	2688	5.0	2745	1.6	8.8	2688	1.7	289.151	-S4500	50-P90/L4	
4.9	2814	1.1	0.5	1983	2.0	2756	4.9	2814	1.1	8.6	2756	1.1	296.430	-S3100	50-P90/L4	
4.5	3064	1.5	0.4	2159	1.9	3001	4.5	3064	1.5	7.9	3001	1.5	322.773	-S4500	50-P90/L4	
4.3	3182	1.0	0.4	2243	1.8	3117	4.3	3182	1.0	7.6	3117	1.0	335.215	-S3100	50-P90/L4	
4.0	3415	0.9	0.4	2407	1.7	3345	4.0	3415	0.9	7.1	3345	0.9	359.758	-S3100	50-P90/L4	
3.9	3470	1.1	0.4	2445	1.6	3398	3.9	3470	1.1	7.0	3398	1.2	365.500	-S4500	50-P90/L4	
3.5	3873	1.1	0.4	2729	1.5	3793	3.5	3873	1.1	6.3	3793	1.2	408.000	-S4500	50-P90/L4	

Selection tables, 4-pole motors

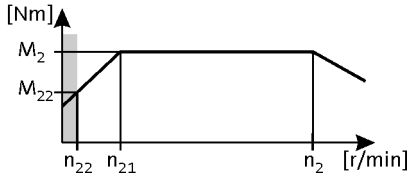

50 Hz: P_N = 2.2 kW
87 Hz: P_N = 3.9 kW

2-stage gearboxes

Mains operation 400 V, 50 Hz			Inverter operation 5 Hz -		- 20 ... 25 Hz		- 50 Hz (1:10)			- 87 Hz (1:17.4)			i	Product		
n_2 [r/min]	M_2 [Nm]	c	n_{22} [r/min]	M_{22} [Nm]	n_{21} [r/min]	M_2 [Nm]	n_2 [r/min]	M_2 [Nm]	c	n_2 [r/min]	M_2 [Nm]	c		g500	m5□□	
435	47	4.3	43	33	180	47	435	47	4.3	767	47	3.6	3.339	-S400	50-P100/M4	
378	54	3.3	38	38	156	54	378	54	3.3	667	54	2.8	3.840	-S220	50-P100/M4	
370	55	5.6	37	38	153	55	370	55	5.6				3.920	-S660	50-P100/M4	
317	64	3.8	32	45	131	64	317	64	3.8	560	65	3.2	4.579	-S400	50-P100/M4	
276	74	2.5	28	52	114	74	276	74	2.5	487	74	2.0	5.267	-S220	50-P100/M4	
270	75	5.6	27	53	112	75	270	75	5.6	477	76	4.7	5.376	-S660	50-P100/M4	
269	76	5.7	27	53	111	76	269	76	5.7	475	76	4.8	5.391	-S950	50-P100/M4	
248	82	3.1	25	57	102	82	248	82	3.1	437	83	2.6	5.860	-S400	50-P100/M4	
241	85	5.6	24	59	99	85	241	85	5.6	424	85	4.7	6.038	-S950	50-P100/M4	
227	90	2.9	23	63	94	90	227	90	2.9	400	90	2.4	6.411	-S400	50-P100/M4	
226	90	5.6	23	63	94	90	226	90	5.6				6.417	-S660	50-P100/M4	
215	95	2.3	21	66	89	95	215	95	2.3				6.767	-S220	50-P100/M4	
211	97	4.8	21	67	87	97	211	97	4.8	372	97	4.0	6.880	-S660	50-P100/M4	
199	103	5.6	20	72	82	103	199	103	5.6				7.311	-S660	50-P100/M4	
195	105	3.5	19	73	80	105	195	105	3.5	343	105	2.9	7.467	-S400	50-P100/M4	
189	108	2.0	19	75	78	108	189	108	2.0				7.667	-S220	50-P100/M4	
189	108	4.7	19	76	78	108	189	108	4.7	333	109	3.9	7.702	-S950	50-P100/M4	
176	116	5.7	18	81	73	116	176	116	5.7	310	117	4.8	8.272	-S2100	50-P100/M4	
172	118	3.2	17	83	71	118	172	118	3.2	304	119	2.7	8.436	-S400	50-P100/M4	
165	124	5.2	17	86	68	124	165	124	5.2	291	124	4.3	8.800	-S660	50-P100/M4	
163	125	5.7	16	87	67	125	163	125	5.7	287	126	4.8	8.917	-S3100	50-P100/M4	
157	130	1.7	16	91	65	130	157	130	1.7				9.280	-S220	50-P100/M4	
145	141	4.4	15	98	60	141	145	141	4.4	256	141	3.7	10.027	-S660	50-P100/M4	
142	144	2.8	14	100	59	144	142	144	2.8	250	144	2.3	10.240	-S400	50-P100/M4	
138	148	1.5	14	103	57	148	138	148	1.5				10.514	-S220	50-P100/M4	
130	157	5.7	13	110	54	157	130	157	5.7	229	158	4.8	11.200	-S950	50-P100/M4	
129	158	4.2	13	110	53	158	129	158	4.2	228	159	3.5	11.262	-S660	50-P100/M4	
126	162	2.5	13	113	52	162	126	162	2.5	221	163	2.1	11.569	-S400	50-P100/M4	
122	167	1.3	12	116	51	167	122	167	1.3				11.876	-S220	50-P100/M4	
118	173	3.8	12	121	49	173	118	173	3.8	208	174	3.2	12.320	-S660	50-P100/M4	
116	176	5.4	12	123	48	176	116	176	5.4	204	177	4.5	12.544	-S950	50-P100/M4	
113	180	3.7	11	126	47	180	113	180	3.7	200	181	3.1	12.832	-S660	50-P100/M4	
112	182	1.2	11	127	46	182	112	182	1.2				12.992	-S220	50-P100/M4	
111	184	2.2	11	128	46	184	111	184	2.2	196	185	1.8	13.105	-S400	50-P100/M4	
108	189	1.2	11	132	45	189	108	189	1.2				13.456	-S220	50-P100/M4	

Selection tables, 4-pole motors

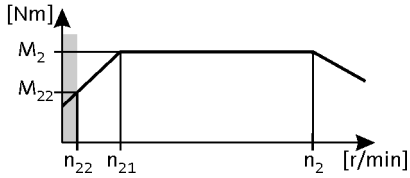

50 Hz: P_N = 2.2 kW
87 Hz: P_N = 3.9 kW

2-stage gearboxes

Mains operation 400 V, 50 Hz			Inverter operation 5 Hz -		- 20 ... 25 Hz		- 50 Hz (1:10)			- 87 Hz (1:17.4)			i	Product		
n_2 [r/min]	M_2 [Nm]	c	n_{22} [r/min]	M_{22} [Nm]	n_{21} [r/min]	M_2 [Nm]	n_2 [r/min]	M_2 [Nm]	c	n_2 [r/min]	M_2 [Nm]	c		g500	m5□□	
103	197	4.8	10	138	43	197	103	197	4.8	183	198	4.0	14.037	-S950	50-P100/M4	
103	197	3.4	10	138	43	197	103	197	3.4	183	198	2.8	14.037	-S660	50-P100/M4	
101	201	2.0	10	141	42	201	101	201	2.0	179	202	1.7	14.336	-S400	50-P100/M4	
99	207	1.1	9.9	144	41	207	99	207	1.1				14.720	-S220	50-P100/M4	
98	208	1.9	9.8	145	41	208	98	208	1.9	173	209	1.6	14.806	-S400	50-P100/M4	
92	221	3.0	9.2	154	38	221	92	221	3.0	163	222	2.5	15.714	-S660	50-P100/M4	
91	225	4.2	9.1	157	38	225	91	225	4.2	160	226	3.5	16.000	-S950	50-P100/M4	
90	227	1.8	9.0	159	37	227	90	227	1.8	158	228	1.5	16.197	-S400	50-P100/M4	
88	233	1.0	8.8	162	36	233	88	233	1.0				16.571	-S220	50-P100/M4	
85	239	5.7	8.5	167	35	239	85	239	5.7	151	240	4.8	17.022	-S2100	50-P100/M4	
81	251	3.8	8.1	176	34	251	81	251	3.8	143	253	3.2	17.905	-S950	50-P100/M4	
81	251	2.6	8.1	176	34	251	81	251	2.6	143	253	2.2	17.905	-S660	50-P100/M4	
79	257	1.6	7.9	179	33	257	79	257	1.6	140	258	1.5	18.286	-S400	50-P100/M4	
77	264	0.8	7.7	184	32	264	77	264	0.8				18.776	-S220	50-P100/M4	
77	266	5.7	7.7	185	32	266	77	266	5.7	135	267	5.4	18.917	-S2100	50-P100/M4	
75	270	2.4	7.5	189	31	270	75	270	2.4	133	271	2.3	19.250	-S660	50-P100/M4	
74	275	3.5	7.4	192	31	275	74	275	3.5	131	276	3.3	19.600	-S950	50-P100/M4	
73	281	5.7	7.2	196	30	281	73	281	5.7	128	283	5.4	20.041	-S3100	50-P100/M4	
70	290	1.4	7.0	202	29	290	70	290	1.4	124	291	1.3	20.659	-S400	50-P100/M4	
66	308	3.1	6.6	215	27	308	66	308	3.1	117	309	2.9	21.933	-S950	50-P100/M4	
66	308	2.1	6.6	215	27	308	66	308	2.1	117	309	2.0	21.933	-S660	50-P100/M4	
65	314	1.3	6.5	220	27	314	65	314	1.3	114	316	1.2	22.400	-S400	50-P100/M4	
64	318	5.7	6.4	222	27	318	64	318	5.7	113	320	5.4	22.663	-S3100	50-P100/M4	
58	352	1.6	5.8	246	24	352	58	352	1.6	102	353	1.6	25.056	-S660	50-P100/M4	
57	355	1.1	5.7	248	24	355	57	355	1.1	101	357	1.1	25.308	-S400	50-P100/M4	
57	358	2.7	5.7	250	24	358	57	358	2.7	100	360	2.5	25.511	-S950	50-P100/M4	
51	397	4.1	5.1	277	21	397	51	397	4.1	91	399	3.9	28.275	-S2100	50-P100/M4	
51	401	2.4	5.1	280	21	401	51	401	2.4	90	403	2.2	28.548	-S950	50-P100/M4	
51	401	1.7	5.1	280	21	401	51	401	1.7	90	403	1.6	28.548	-S660	50-P100/M4	
47	438	1.5	4.7	305	19	438	47	438	1.5	82	440	1.5	31.167	-S660	50-P100/M4	
46	439	2.2	4.6	306	19	439	46	439	2.2	82	441	2.2	31.267	-S950	50-P100/M4	
46	441	4.1	4.6	308	19	441	46	441	4.1	82	443	4.1	31.422	-S2100	50-P100/M4	
44	467	4.1	4.4	326	18	467	44	467	4.1	77	469	4.1	33.289	-S3100	50-P100/M4	
42	482	3.5	4.2	336	18	482	42	482	3.5	75	484	3.5	34.333	-S2100	50-P100/M4	
42	491	1.9	4.1	343	17	491	42	491	1.9	73	493	1.9	34.989	-S950	50-P100/M4	

Selection tables, 4-pole motors

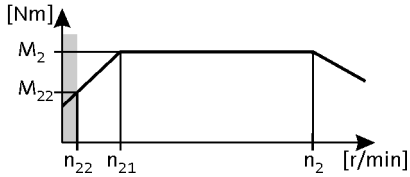

50 Hz: P_N = 2.2 kW
87 Hz: P_N = 3.9 kW

2-stage gearboxes

Mains operation 400 V, 50 Hz			Inverter operation 5 Hz -		- 20 ... 25 Hz		- 50 Hz (1:10)			- 87 Hz (1:17.4)			i	Product g500	m5□□
n_2 [r/min]	M_2 [Nm]	c	n_{22} [r/min]	M_{22} [Nm]	n_{21} [r/min]	M_2 [Nm]	n_2 [r/min]	M_2 [Nm]	c	n_2 [r/min]	M_2 [Nm]	c			
41	498	1.3	4.1	348	17	498	41	498	1.3	72	501	1.3	35.511	-S660	50-P100/M4
39	528	4.1	3.9	369	16	528	39	528	4.1	68	531	4.1	37.644	-S3100	50-P100/M4
38	536	3.5	3.8	374	16	536	38	536	3.5	67	538	3.5	38.156	-S2100	50-P100/M4
36	567	3.5	3.6	396	15	567	36	567	3.5	63	570	3.5	40.422	-S3100	50-P100/M4
35	576	1.7	3.5	402	15	576	35	576	1.7	62	579	1.6	41.067	-S950	50-P100/M4
35	590	3.5	3.4	412	14	590	35	590	3.5	61	593	3.5	42.044	-S4500	50-P100/M4
33	624	2.8	3.3	435	14	624	33	624	2.8	58	627	2.8	44.431	-S2100	50-P100/M4
32	642	3.5	3.2	448	13	642	32	642	3.5	56	645	3.5	45.711	-S3100	50-P100/M4
32	645	1.5	3.2	450	13	645	32	645	1.5	56	648	1.5	45.956	-S950	50-P100/M4
31	659	3.5	3.1	460	13	659	31	659	3.5	55	662	3.5	46.933	-S4500	50-P100/M4
29	693	2.8	2.9	484	12	693	29	693	2.8	52	696	2.8	49.378	-S2100	50-P100/M4
29	700	1.3	2.9	488	12	700	29	700	1.3	51	703	1.3	49.840	-S950	50-P100/M4
29	716	2.9	2.8	500	12	716	29	716	2.9	50	720	2.9	51.027	-S4500	50-P100/M4
28	734	2.8	2.8	513	12	734	28	734	2.8	49	738	2.8	52.311	-S3100	50-P100/M4
27	757	2.3	2.7	528	11	757	27	757	2.3	48	761	2.3	53.924	-S2100	50-P100/M4
26	783	1.2	2.6	547	11	783	26	783	1.2	46	787	1.2	55.773	-S950	50-P100/M4
26	800	2.9	2.5	558	11	800	26	800	2.9	45	803	2.9	56.960	-S4500	50-P100/M4
25	830	2.8	2.5	580	10	830	25	830	2.8	43	834	2.8	59.156	-S3100	50-P100/M4
24	841	2.3	2.4	587	10	841	24	841	2.3	43	845	2.3	59.927	-S2100	50-P100/M4
23	891	2.3	2.3	622	9.5	891	23	891	2.3	40	895	2.3	63.487	-S3100	50-P100/M4
23	905	2.3	2.2	632	9.3	905	23	905	2.3	40	910	2.3	64.500	-S4500	50-P100/M4
21	957	1.5	2.1	668	8.8	957	21	957	1.5	38	961	1.5	68.162	-S2100	50-P100/M4
20	1008	2.3	2.0	704	8.4	1008	20	1008	2.3	36	1013	2.3	71.793	-S3100	50-P100/M4
20	1011	2.3	2.0	706	8.3	1011	20	1011	2.3	36	1015	2.3	72.000	-S4500	50-P100/M4
19	1063	1.5	1.9	742	7.9	1063	19	1063	1.5	34	1068	1.5	75.750	-S2100	50-P100/M4

3-stage gearboxes

Mains operation 400 V, 50 Hz			Inverter operation 5 Hz -		- 20 ... 25 Hz		- 50 Hz (1:10)			- 87 Hz (1:17.4)			i	Product g500	m5□□
n_2 [r/min]	M_2 [Nm]	c	n_{22} [r/min]	M_{22} [Nm]	n_{21} [r/min]	M_2 [Nm]	n_2 [r/min]	M_2 [Nm]	c	n_2 [r/min]	M_2 [Nm]	c			
36	554	3.5	3.6	387	15	554	36	554	3.5	64	556	2.9	40.056	-S2100	50-P100/M4
33	616	3.3	3.3	430	14	616	33	616	3.3	58	618	2.8	44.515	-S2100	50-P100/M4
31	652	4.5	3.1	455	13	652	31	652	4.5	54	655	3.8	47.159	-S3100	50-P100/M4
29	692	1.4	2.9	483	12	692	29	692	1.4	51	695	1.3	50.027	-S950	50-P100/M4
27	737	4.1	2.7	515	11	737	27	737	4.1	48	741	3.9	53.330	-S3100	50-P100/M4
26	760	2.7	2.6	530	11	760	26	760	2.7	47	763	2.6	54.933	-S2100	50-P100/M4
26	774	1.2	2.6	540	11	774	26	774	1.2	46	778	1.2	55.982	-S950	50-P100/M4
24	844	2.4	2.4	589	9.8	844	24	844	2.4	42	848	2.3	61.049	-S2100	50-P100/M4
23	885	1.1	2.3	618	9.4	885	23	885	1.1	40	889	1.0	64.022	-S950	50-P100/M4
23	894	3.5	2.2	624	9.3	894	23	894	3.5	40	898	3.3	64.676	-S3100	50-P100/M4

Selection tables, 4-pole motors

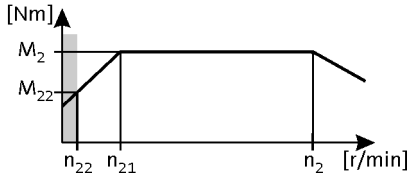

50 Hz: P_N = 2.2 kW
87 Hz: P_N = 3.9 kW

3-stage gearboxes

Mains operation 400 V, 50 Hz			Inverter operation 5 Hz -		- 20 ... 25 Hz		- 50 Hz (1:10)			- 87 Hz (1:17.4)			i	Product		
n_2 [r/min]	M_2 [Nm]	c	n_{22} [r/min]	M_{22} [Nm]	n_{21} [r/min]	M_2 [Nm]	n_2 [r/min]	M_2 [Nm]	c	n_2 [r/min]	M_2 [Nm]	c		g500	m5□□	
22	898	5.0	2.2	627	9.2	898	22	898	5.0	39	903	4.7	64.978	-S4500	50-P100/M4	
21	968	1.0	2.1	676	8.6	968	21	968	1.0	37	973	1.0	70.037	-S950	50-P100/M4	
21	972	2.1	2.1	679	8.5	972	21	972	2.1	36	977	2.1	70.302	-S2100	50-P100/M4	
20	991	1.0	2.0	692	8.4	991	20	991	1.0	36	995	1.0	71.644	-S950	50-P100/M4	
20	1003	4.5	2.0	700	8.3	1003	20	1003	4.5	35	1008	4.5	72.533	-S4500	50-P100/M4	
20	1006	4.5	2.0	702	8.2	1006	20	1006	4.5	35	1011	4.5	72.775	-S4500	50-P100/M4	
20	1011	3.1	2.0	706	8.2	1011	20	1011	3.1	35	1016	3.1	73.138	-S3100	50-P100/M4	
19	1063	1.9	1.9	742	7.8	1063	19	1063	1.9	33	1068	1.9	76.907	-S2100	50-P100/M4	
19	1080	1.9	1.9	754	7.7	1080	19	1080	1.9	33	1085	1.9	78.128	-S2100	50-P100/M4	
19	1084	0.9	1.9	757	7.7	1084	19	1084	0.9	33	1089	0.9	78.375	-S950	50-P100/M4	
18	1123	4.0	1.8	784	7.4	1123	18	1123	4.0	32	1129	4.0	81.237	-S4500	50-P100/M4	
18	1144	2.7	1.8	799	7.2	1144	18	1144	2.7	31	1150	2.7	82.769	-S3100	50-P100/M4	
17	1182	1.7	1.7	825	7.0	1182	17	1182	1.7	30	1187	1.7	85.468	-S2100	50-P100/M4	
16	1252	2.5	1.6	874	6.6	1252	16	1252	2.5	28	1258	2.5	90.546	-S3100	50-P100/M4	
16	1284	3.5	1.6	896	6.5	1284	16	1284	3.5	28	1290	3.5	92.825	-S4500	50-P100/M4	
16	1294	2.4	1.5	903	6.4	1294	16	1294	2.4	27	1300	2.4	93.599	-S3100	50-P100/M4	
15	1356	1.5	1.5	947	6.1	1356	15	1356	1.5	26	1363	1.5	98.095	-S2100	50-P100/M4	
15	1360	5.9	1.5	748	7.4	1360	15	1360	5.9	26	1371	5.8	99.180	-S8000	40-P100/M4	
14	1416	2.2	1.4	988	5.9	1416	14	1416	2.2	25	1422	2.2	102.393	-S3100	50-P100/M4	
14	1433	3.1	1.4	1000	5.8	1433	14	1433	3.1	25	1439	3.1	103.619	-S4500	50-P100/M4	
13	1507	1.4	1.3	1052	5.5	1507	13	1507	1.4	24	1514	1.4	109.016	-S2100	50-P100/M4	
13	1540	5.2	1.3	847	6.5	1540	13	1540	5.2	23	1554	5.2	112.360	-S8000	40-P100/M4	
13	1572	2.9	1.3	1098	5.3	1572	13	1572	2.9	23	1580	2.9	113.711	-S4500	50-P100/M4	
13	1597	1.9	1.3	1115	5.2	1597	13	1597	1.9	22	1604	1.9	115.492	-S3100	50-P100/M4	
12	1662	1.2	1.2	1160	5.0	1662	12	1662	1.2	21	1669	1.2	120.167	-S2100	50-P100/M4	
12	1737	4.6	1.1	956	5.8	1737	12	1737	4.6	20	1752	4.6	126.730	-S8000	40-P100/M4	
11	1755	2.6	1.1	1225	4.7	1755	11	1755	2.6	20	1763	2.6	126.933	-S4500	50-P100/M4	
11	1806	1.7	1.1	1261	4.6	1806	11	1806	1.7	20	1814	1.7	130.603	-S3100	50-P100/M4	
11	1847	1.1	1.1	1289	4.5	1847	11	1847	1.1	19	1855	1.1	133.544	-S2100	50-P100/M4	
10	1939	4.1	1.0	1067	5.2	1939	10	1939	4.1	18	1956	4.1	141.430	-S8000	40-P100/M4	
10	1956	1.6	1.0	1366	4.2	1956	10	1956	1.6	18	1965	1.6	141.478	-S3100	50-P100/M4	
9.8	2047	2.2	1.0	1429	4.1	2047	9.8	2047	2.2	17	2056	2.2	148.005	-S4500	50-P100/M4	
9.3	2163	1.0	0.9	1510	3.8	2163	9.3	2163	1.0	16	2173	0.9	156.407	-S2100	50-P100/M4	
9.2	2179	3.7	0.9	1198	4.6	2179	9.2	2179	3.7	16	2197	3.6	158.910	-S8000	40-P100/M4	
9.1	2212	1.4	0.9	1544	3.8	2212	9.1	2212	1.4	16	2223	1.4	159.989	-S3100	50-P100/M4	

Selection tables, 4-pole motors

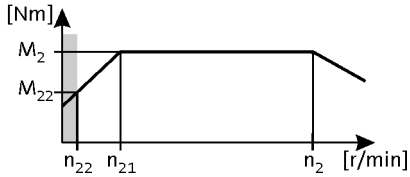

50 Hz: P_N = 2.2 kW
87 Hz: P_N = 3.9 kW

3-stage gearboxes

Mains operation 400 V, 50 Hz			Inverter operation 5 Hz -		- 20 ... 25 Hz		- 50 Hz (1:10)			- 87 Hz (1:17.4)			i	Product		
n_2 [r/min]	M_2 [Nm]	c	n_{22} [r/min]	M_{22} [Nm]	n_{21} [r/min]	M_2 [Nm]	n_2 [r/min]	M_2 [Nm]	c	n_2 [r/min]	M_2 [Nm]	c		g500	m5□□	
8.8	2284	2.0	0.9	1595	3.6	2284	8.8	2284	2.0	16	2295	2.0	165.215	-S4500	50-P100/M4	
8.4	2403	0.9	0.8	1678	3.5	2403	8.4	2403	0.9	15	2415	0.9	173.820	-S2100	50-P100/M4	
8.2	2460	3.3	0.8	1353	4.1	2460	8.2	2460	3.3	14	2481	3.2	179.440	-S8000	40-P100/M4	
8.0	2508	1.8	0.8	1751	3.3	2508	8.0	2508	1.8	14	2520	1.8	181.396	-S4500	50-P100/M4	
7.9	2546	1.2	0.8	1777	3.3	2546	7.9	2546	1.2	14	2558	1.2	184.146	-S3100	50-P100/M4	
7.2	2800	1.6	0.7	1955	3.0	2800	7.2	2800	1.6	13	2813	1.6	202.489	-S4500	50-P100/M4	
7.2	2776	2.9	0.7	1527	3.6	2776	7.2	2776	2.9	13	2800	2.9	202.500	-S8000	40-P100/M4	
7.0	2879	1.1	0.7	2010	2.9	2879	7.0	2879	1.1	12	2893	1.1	208.240	-S3100	50-P100/M4	
6.5	3077	2.6	0.6	1692	3.3	3077	6.5	3077	2.6	12	3103	2.6	224.420	-S8000	40-P100/M4	
6.3	3167	1.0	0.6	2211	2.6	3167	6.3	3167	1.0	11	3182	1.0	229.059	-S3100	50-P100/M4	
6.1	3294	1.4	0.6	2300	2.5	3294	6.1	3294	1.4	11	3310	1.4	238.252	-S4500	50-P100/M4	
5.8	3464	2.3	0.6	1905	2.9	3464	5.8	3464	2.3	10	3493	2.3	252.640	-S8000	40-P100/M4	
5.6	3582	0.9	0.6	2500	2.3	3582	5.6	3582	0.9	9.9	3598	0.9	259.030	-S3100	50-P100/M4	
5.5	3677	1.2	0.5	2567	2.3	3677	5.5	3677	1.2	9.6	3695	1.2	265.956	-S4500	50-P100/M4	
5.1	3907	2.1	0.5	2149	2.6	3907	5.1	3907	2.1	9.0	3941	2.0	285.000	-S8000	40-P100/M4	
5.0	3998	1.1	0.5	2791	2.1	3998	5.0	3998	1.1	8.9	4017	1.1	289.151	-S4500	50-P100/M4	
4.8	4168	1.9	0.5	2293	2.4	4168	4.8	4168	1.9	8.5	4204	1.9	304.030	-S8000	40-P100/M4	
4.5	4463	1.0	0.4	3116	1.9	4463	4.5	4463	1.0	7.9	4484	1.0	322.773	-S4500	50-P100/M4	
4.5	4429	1.8	0.4	2436	2.3	4429	4.5	4429	1.8	8.0	4467	1.8	323.040	-S8000	40-P100/M4	
3.9	5168	1.6	0.4	2843	1.9	5168	3.9	5168	1.6	6.8	5213	1.5	377.000	-S8000	40-P100/M4	

Selection tables, 4-pole motors

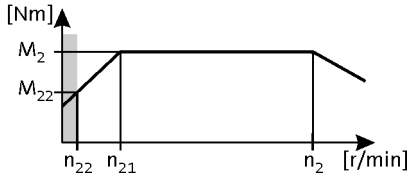

50 Hz: P_N = 3.0 kW
87 Hz: P_N = 5.2 kW

2-stage gearboxes

Mains operation 400 V, 50 Hz			Inverter operation 5 Hz -		- 20 ... 25 Hz		- 50 Hz (1:10)			- 87 Hz (1:17.4)			i	Product		
n_2 [r/min]	M_2 [Nm]	c	n_{22} [r/min]	M_{22} [Nm]	n_{21} [r/min]	M_2 [Nm]	n_2 [r/min]	M_2 [Nm]	c	n_2 [r/min]	M_2 [Nm]	c		g500	m5□□	
434	64	3.2	43	45	180	63	434	64	3.2	766	63	2.7	3.339	-S400	50-P100/L4	
377	74	2.4	38	51	156	74	377	74	2.4				3.840	-S220	50-P100/L4	
370	75	4.1	37	53	153	75	370	75	4.1				3.920	-S660	50-P100/L4	
316	88	2.8	32	61	131	86	316	88	2.8	559	86	2.4	4.579	-S400	50-P100/L4	
275	101	1.8	28	71	114	101	275	101	1.8				5.267	-S220	50-P100/L4	
270	103	4.1	27	72	112	101	270	103	4.1	476	101	3.5	5.376	-S660	50-P100/L4	
269	103	4.2	27	72	111	102	269	103	4.2	475	102	3.6	5.391	-S950	50-P100/L4	
247	112	2.3	25	79	102	110	247	112	2.3	437	110	2.0	5.860	-S400	50-P100/L4	
240	116	4.1	24	81	99	114	240	116	4.1	424	114	3.5	6.038	-S950	50-P100/L4	
226	123	2.1	23	86	94	121	226	123	2.1	399	121	1.8	6.411	-S400	50-P100/L4	
226	123	4.1	23	86	94	123	226	123	4.1				6.417	-S660	50-P100/L4	
214	130	1.7	21	91	89	130	214	130	1.7				6.767	-S220	50-P100/L4	
211	132	3.5	21	92	87	130	211	132	3.5	372	130	3.0	6.880	-S660	50-P100/L4	
198	140	4.1	20	98	82	140	198	140	4.1				7.311	-S660	50-P100/L4	
194	143	2.6	19	100	80	143	194	143	2.6				7.467	-S400	50-P100/L4	
189	147	1.5	19	103	78	147	189	147	1.5				7.667	-S220	50-P100/L4	
188	148	3.5	19	103	78	145	188	148	3.5	332	145	3.0	7.702	-S950	50-P100/L4	
175	159	4.2	18	111	73	156	175	159	4.2	309	156	3.6	8.272	-S2100	50-P100/L4	
172	162	2.4	17	113	71	162	172	162	2.4				8.436	-S400	50-P100/L4	
165	169	3.8	17	118	68	166	165	169	3.8	291	166	3.2	8.800	-S660	50-P100/L4	
163	171	4.2	16	119	67	168	163	171	4.2	287	168	3.6	8.917	-S3100	50-P100/L4	
156	178	1.2	16	124	65	178	156	178	1.2				9.280	-S220	50-P100/L4	
145	192	3.3	15	134	60	189	145	192	3.3	255	189	2.8	10.027	-S660	50-P100/L4	
142	196	2.0	14	137	59	193	142	196	2.0	250	193	1.7	10.240	-S400	50-P100/L4	
138	202	1.1	14	141	57	202	138	202	1.1				10.514	-S220	50-P100/L4	
129	215	4.2	13	150	54	211	129	215	4.2	229	211	3.6	11.200	-S950	50-P100/L4	
129	216	3.1	13	151	53	212	129	216	3.1	227	212	2.6	11.262	-S660	50-P100/L4	
125	222	1.8	13	155	52	222	125	222	1.8				11.569	-S400	50-P100/L4	
122	228	1.0	12	159	51	228	122	228	1.0				11.876	-S220	50-P100/L4	
118	236	2.8	12	165	49	232	118	236	2.8	208	232	2.4	12.320	-S660	50-P100/L4	
116	241	4.0	12	168	48	236	116	241	4.0	204	236	3.4	12.544	-S950	50-P100/L4	
113	246	2.7	11	172	47	242	113	246	2.7	199	242	2.3	12.832	-S660	50-P100/L4	
112	249	0.9	11	174	46	249	112	249	0.9				12.992	-S220	50-P100/L4	
111	251	1.6	11	176	46	247	111	251	1.6	195	247	1.4	13.105	-S400	50-P100/L4	
108	258	0.9	11	180	45	258	108	258	0.9				13.456	-S220	50-P100/L4	

Selection tables, 4-pole motors

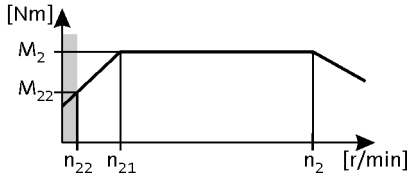

50 Hz: P_N = 3.0 kW
87 Hz: P_N = 5.2 kW

2-stage gearboxes

Mains operation 400 V, 50 Hz			Inverter operation 5 Hz -		- 20 ... 25 Hz		- 50 Hz (1:10)			- 87 Hz (1:17.4)			i	Product		
n_2 [r/min]	M_2 [Nm]	c	n_{22} [r/min]	M_{22} [Nm]	n_{21} [r/min]	M_2 [Nm]	n_2 [r/min]	M_2 [Nm]	c	n_2 [r/min]	M_2 [Nm]	c		g500	m5□□	
103	269	3.5	10	188	43	264	103	269	3.5	182	264	3.0	14.037	-S950	50-P100/L4	
103	269	2.5	10	188	43	264	103	269	2.5	182	264	2.1	14.037	-S660	50-P100/L4	
101	275	1.5	10	192	42	270	101	275	1.5	179	270	1.2	14.336	-S400	50-P100/L4	
98	284	1.4	9.8	198	41	279	98	284	1.4	173	279	1.2	14.806	-S400	50-P100/L4	
92	301	2.2	9.2	210	38	296	92	301	2.2	163	296	1.9	15.714	-S660	50-P100/L4	
91	307	3.1	9.1	214	38	301	91	307	3.1	160	301	2.6	16.000	-S950	50-P100/L4	
90	311	1.3	9.0	217	37	305	90	311	1.3	158	305	1.1	16.197	-S400	50-P100/L4	
85	327	4.2	8.5	228	35	320	85	327	4.2	150	320	3.6	17.022	-S2100	50-P100/L4	
81	343	2.8	8.1	240	34	337	81	343	2.8	143	337	2.4	17.905	-S950	50-P100/L4	
81	343	1.9	8.1	240	34	337	81	343	1.9	143	337	1.6	17.905	-S660	50-P100/L4	
79	351	1.1	7.9	245	33	344	79	351	1.1	140	344	1.1	18.286	-S400	50-P100/L4	
77	363	4.2	7.7	253	32	356	77	363	4.2	135	356	4.1	18.917	-S2100	50-P100/L4	
75	369	1.8	7.5	258	31	362	75	369	1.8	133	362	1.7	19.250	-S660	50-P100/L4	
74	376	2.5	7.4	262	31	369	74	376	2.5	131	369	2.5	19.600	-S950	50-P100/L4	
72	384	4.2	7.2	268	30	377	72	384	4.2	128	377	4.1	20.041	-S3100	50-P100/L4	
70	396	1.0	7.0	277	29	389	70	396	1.0	124	389	1.0	20.659	-S400	50-P100/L4	
66	421	2.3	6.6	294	27	413	66	421	2.3	117	413	2.2	21.933	-S950	50-P100/L4	
66	421	1.6	6.6	294	27	413	66	421	1.6	117	413	1.5	21.933	-S660	50-P100/L4	
65	430	0.9	6.5	300	27	422	65	430	0.9	114	422	0.9	22.400	-S400	50-P100/L4	
64	435	4.2	6.4	303	27	427	64	435	4.2	113	427	4.1	22.663	-S3100	50-P100/L4	
58	481	1.2	5.8	336	24	472	58	481	1.2	102	472	1.2	25.056	-S660	50-P100/L4	
57	485	0.8	5.7	339	24	485	57	485	0.8				25.308	-S400	50-P100/L4	
57	489	1.9	5.7	342	24	480	57	489	1.9	100	480	1.9	25.511	-S950	50-P100/L4	
51	542	3.0	5.1	379	21	532	51	542	3.0	91	532	2.9	28.275	-S2100	50-P100/L4	
51	548	1.7	5.1	382	21	537	51	548	1.7	90	537	1.7	28.548	-S950	50-P100/L4	
51	548	1.2	5.1	382	21	537	51	548	1.2	90	537	1.2	28.548	-S660	50-P100/L4	
47	598	1.1	4.7	417	19	587	47	598	1.1	82	587	1.1	31.167	-S660	50-P100/L4	
46	600	1.6	4.6	419	19	589	46	600	1.6	82	589	1.6	31.267	-S950	50-P100/L4	
46	603	3.0	4.6	421	19	592	46	603	3.0	81	592	3.0	31.422	-S2100	50-P100/L4	
44	639	3.0	4.4	446	18	627	44	639	3.0	77	627	3.0	33.289	-S3100	50-P100/L4	
42	659	2.6	4.2	460	18	646	42	659	2.6	75	646	2.6	34.333	-S2100	50-P100/L4	
41	671	1.4	4.1	469	17	659	41	671	1.4	73	659	1.4	34.989	-S950	50-P100/L4	
41	681	1.0	4.1	476	17	669	41	681	1.0	72	669	1.0	35.511	-S660	50-P100/L4	
39	722	3.0	3.9	504	16	709	39	722	3.0	68	709	3.0	37.644	-S3100	50-P100/L4	
38	732	2.6	3.8	511	16	718	38	732	2.6	67	718	2.6	38.156	-S2100	50-P100/L4	

Selection tables, 4-pole motors

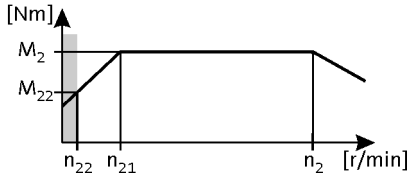

50 Hz: P_N = 3.0 kW
87 Hz: P_N = 5.2 kW

2-stage gearboxes

Mains operation 400 V, 50 Hz			Inverter operation 5 Hz -		- 20 ... 25 Hz		- 50 Hz (1:10)			- 87 Hz (1:17.4)			i	Product		
n_2 [r/min]	M_2 [Nm]	c	n_{22} [r/min]	M_{22} [Nm]	n_{21} [r/min]	M_2 [Nm]	n_2 [r/min]	M_2 [Nm]	c	n_2 [r/min]	M_2 [Nm]	c		g500	m5□□	
36	775	2.6	3.6	541	15	761	36	775	2.6	63	761	2.6	40.422	-S3100	50-P100/L4	
35	788	1.2	3.5	550	15	773	35	788	1.2	62	773	1.2	41.067	-S950	50-P100/L4	
35	807	2.5	3.4	563	14	792	35	807	2.5	61	792	2.6	42.044	-S4500	50-P100/L4	
33	852	2.0	3.3	595	14	837	33	852	2.0	58	837	2.1	44.431	-S2100	50-P100/L4	
32	877	2.6	3.2	612	13	861	32	877	2.6	56	861	2.6	45.711	-S3100	50-P100/L4	
32	882	1.1	3.2	615	13	865	32	882	1.1	56	865	1.1	45.956	-S950	50-P100/L4	
31	900	2.5	3.1	628	13	884	31	900	2.5	55	884	2.6	46.933	-S4500	50-P100/L4	
29	947	2.0	2.9	661	12	930	29	947	2.0	52	930	2.1	49.378	-S2100	50-P100/L4	
29	956	1.0	2.9	667	12	938	29	956	1.0	51	938	1.0	49.840	-S950	50-P100/L4	
28	979	2.1	2.8	683	12	961	28	979	2.1	50	961	2.2	51.027	-S4500	50-P100/L4	
28	1003	2.0	2.8	700	12	1003	28	1003	2.0	49	985	2.1	52.311	-S3100	50-P100/L4	
27	1034	1.7	2.7	722	11	1015	27	1034	1.7	48	1015	1.7	53.924	-S2100	50-P100/L4	
26	1070	0.9	2.6	747	11	1050	26	1070	0.9	46	1050	0.9	55.773	-S950	50-P100/L4	
25	1093	2.1	2.5	763	11	1072	25	1093	2.1	45	1072	2.2	56.960	-S4500	50-P100/L4	
25	1135	2.0	2.5	792	10	1114	25	1135	2.0	43	1114	2.1	59.156	-S3100	50-P100/L4	
24	1150	1.7	2.4	802	10	1128	24	1150	1.7	43	1128	1.7	59.927	-S2100	50-P100/L4	
23	1218	1.7	2.3	850	9.5	1195	23	1218	1.7	40	1195	1.7	63.487	-S3100	50-P100/L4	
23	1237	1.7	2.2	864	9.3	1214	23	1237	1.7	40	1214	1.7	64.500	-S4500	50-P100/L4	
21	1307	1.1	2.1	913	8.8	1283	21	1307	1.1	38	1283	1.1	68.162	-S2100	50-P100/L4	
20	1377	1.7	2.0	961	8.4	1352	20	1377	1.7	36	1352	1.7	71.793	-S3100	50-P100/L4	
20	1381	1.7	2.0	964	8.3	1356	20	1381	1.7	36	1356	1.7	72.000	-S4500	50-P100/L4	
19	1453	1.1	1.9	1014	7.9	1426	19	1453	1.1	34	1426	1.1	75.750	-S2100	50-P100/L4	

3-stage gearboxes

Mains operation 400 V, 50 Hz			Inverter operation 5 Hz -		- 20 ... 25 Hz		- 50 Hz (1:10)			- 87 Hz (1:17.4)			i	Product		
n_2 [r/min]	M_2 [Nm]	c	n_{22} [r/min]	M_{22} [Nm]	n_{21} [r/min]	M_2 [Nm]	n_2 [r/min]	M_2 [Nm]	c	n_2 [r/min]	M_2 [Nm]	c		g500	m5□□	
36	757	2.6	3.6	528	15	743	36	757	2.6	64	743	2.2	40.056	-S2100	50-P100/L4	
33	841	2.4	3.3	587	14	826	33	841	2.4	58	826	2.1	44.515	-S2100	50-P100/L4	
31	891	3.3	3.1	622	13	875	31	891	3.3	54	875	2.8	47.159	-S3100	50-P100/L4	
29	945	1.0	2.9	660	12	928	29	945	1.0	51	928	1.0	50.027	-S950	50-P100/L4	
27	1008	3.0	2.7	703	11	1008	27	1008	3.0	48	989	2.9	53.330	-S3100	50-P100/L4	
26	1038	2.0	2.6	725	11	1019	26	1038	2.0	47	1019	1.9	54.933	-S2100	50-P100/L4	
26	1058	0.9	2.6	738	11	1058	26	1058	0.9				55.982	-S950	50-P100/L4	
24	1153	1.8	2.4	805	9.8	1132	24	1153	1.8	42	1132	1.7	61.049	-S2100	50-P100/L4	
22	1222	2.5	2.2	853	9.3	1199	22	1222	2.5	40	1199	2.5	64.676	-S3100	50-P100/L4	
22	1228	3.7	2.2	857	9.2	1205	22	1228	3.7	39	1205	3.6	64.978	-S4500	50-P100/L4	
21	1328	1.5	2.1	927	8.5	1304	21	1328	1.5	36	1304	1.6	70.302	-S2100	50-P100/L4	
20	1370	3.3	2.0	957	8.3	1345	20	1370	3.3	35	1345	3.4	72.533	-S4500	50-P100/L4	
20	1375	3.3	2.0	960	8.2	1350	20	1375	3.3	35	1350	3.3	72.775	-S4500	50-P100/L4	

Selection tables, 4-pole motors

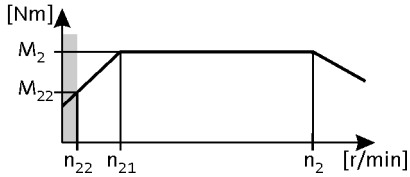

50 Hz: P_N = 3.0 kW
87 Hz: P_N = 5.2 kW

3-stage gearboxes

Mains operation 400 V, 50 Hz			Inverter operation 5 Hz -		- 20 ... 25 Hz		- 50 Hz (1:10)			- 87 Hz (1:17.4)			i	Product		
n_2 [r/min]	M_2 [Nm]	c	n_{22} [r/min]	M_{22} [Nm]	n_{21} [r/min]	M_2 [Nm]	n_2 [r/min]	M_2 [Nm]	c	n_2 [r/min]	M_2 [Nm]	c		g500	m5□□	
20	1382	2.2	2.0	965	8.2	1356	20	1382	2.2	35	1356	2.3	73.138	-S3100	50-P100/L4	
19	1453	1.4	1.9	1014	7.8	1426	19	1453	1.4	33	1426	1.4	76.907	-S2100	50-P100/L4	
19	1476	1.4	1.9	1030	7.7	1449	19	1476	1.4	33	1449	1.4	78.128	-S2100	50-P100/L4	
19	1482	5.4	1.8	815	9.2	1459	19	1482	5.4	33	1459	5.5	78.980	-S8000	40-P100/L4	
18	1535	2.9	1.8	1071	7.4	1506	18	1535	2.9	32	1506	3.0	81.237	-S4500	50-P100/L4	
18	1564	2.0	1.8	1092	7.2	1535	18	1564	2.0	31	1535	2.0	82.769	-S3100	50-P100/L4	
17	1615	1.3	1.7	1127	7.0	1585	17	1615	1.3	30	1585	1.3	85.468	-S2100	50-P100/L4	
17	1636	4.9	1.7	900	8.4	1611	17	1636	4.9	30	1611	5.0	87.200	-S8000	40-P100/L4	
16	1711	1.8	1.6	1194	6.6	1679	16	1711	1.8	28	1679	1.9	90.546	-S3100	50-P100/L4	
16	1754	2.6	1.6	1224	6.5	1721	16	1754	2.6	28	1721	2.6	92.825	-S4500	50-P100/L4	
16	1768	1.8	1.5	1234	6.4	1736	16	1768	1.8	27	1736	1.8	93.599	-S3100	50-P100/L4	
15	1853	1.1	1.5	1294	6.1	1819	15	1853	1.1	26	1819	1.1	98.095	-S2100	50-P100/L4	
15	1860	4.3	1.5	1023	7.4	1832	15	1860	4.3	26	1832	4.4	99.180	-S8000	40-P100/L4	
14	1935	1.6	1.4	1350	5.9	1899	14	1935	1.6	25	1899	1.6	102.393	-S3100	50-P100/L4	
14	1958	2.3	1.4	1367	5.8	1922	14	1958	2.3	25	1922	2.3	103.619	-S4500	50-P100/L4	
13	2060	1.0	1.3	1438	5.5	2022	13	2060	1.0	24	2022	1.0	109.016	-S2100	50-P100/L4	
13	2108	3.8	1.3	1159	6.5	2075	13	2108	3.8	23	2075	3.9	112.360	-S8000	40-P100/L4	
13	2149	2.1	1.3	1500	5.3	2109	13	2149	2.1	23	2109	2.1	113.711	-S4500	50-P100/L4	
13	2182	1.4	1.3	1523	5.2	2142	13	2182	1.4	22	2142	1.5	115.492	-S3100	50-P100/L4	
12	2270	0.9	1.2	1585	5.0	2228	12	2270	0.9	21	2228	0.9	120.167	-S2100	50-P100/L4	
12	2377	3.4	1.1	1308	5.8	2341	12	2377	3.4	20	2341	3.4	126.730	-S8000	40-P100/L4	
11	2398	1.9	1.1	1674	4.7	2354	11	2398	1.9	20	2354	1.9	126.933	-S4500	50-P100/L4	
11	2468	1.3	1.1	1722	4.6	2422	11	2468	1.3	20	2422	1.3	130.603	-S3100	50-P100/L4	
11	2523	0.8	1.1	1761	4.5	2477	11	2523	0.8	19	2477	0.8	133.544	-S2100	50-P100/L4	
10	2653	3.0	1.0	1459	5.2	2612	10	2653	3.0	18	2612	3.1	141.430	-S8000	40-P100/L4	
10	2673	1.2	1.0	1866	4.2	2624	10	2673	1.2	18	2624	1.2	141.478	-S3100	50-P100/L4	
9.8	2796	1.6	1.0	1952	4.1	2745	9.8	2796	1.6	17	2745	1.6	148.005	-S4500	50-P100/L4	
9.2	2981	2.7	0.9	1640	4.6	2935	9.2	2981	2.7	16	2935	2.7	158.910	-S8000	40-P100/L4	
9.1	3023	1.0	0.9	2110	3.8	2967	9.1	3023	1.0	16	2967	1.0	159.989	-S3100	50-P100/L4	
8.8	3122	1.4	0.9	2179	3.6	3064	8.8	3122	1.4	16	3064	1.5	165.215	-S4500	50-P100/L4	
8.1	3366	2.4	0.8	1851	4.1	3315	8.1	3366	2.4	14	3315	2.4	179.440	-S8000	40-P100/L4	
8.0	3427	1.3	0.8	2392	3.3	3364	8.0	3427	1.3	14	3364	1.3	181.396	-S4500	50-P100/L4	
7.9	3479	0.9	0.8	2429	3.3	3415	7.9	3479	0.9	14	3415	0.9	184.146	-S3100	50-P100/L4	
7.2	3826	1.2	0.7	2671	3.0	3755	7.2	3826	1.2	13	3755	1.2	202.489	-S4500	50-P100/L4	
7.2	3799	2.1	0.7	2089	3.6	3740	7.2	3799	2.1	13	3740	2.1	202.500	-S8000	40-P100/L4	

Selection tables, 4-pole motors

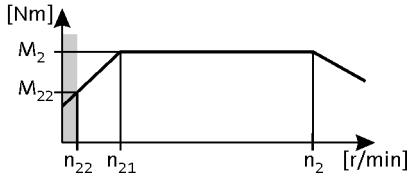

50 Hz: P_N = 3.0 kW
87 Hz: P_N = 5.2 kW

3-stage gearboxes

Mains operation 400 V, 50 Hz			Inverter operation 5 Hz -		- 20 ... 25 Hz		- 50 Hz (1:10)			- 87 Hz (1:17.4)			i	Product		
n_2 [r/min]	M_2 [Nm]	c	n_{22} [r/min]	M_{22} [Nm]	n_{21} [r/min]	M_2 [Nm]	n_2 [r/min]	M_2 [Nm]	c	n_2 [r/min]	M_2 [Nm]	c		g500	m5□□	
6.5	4210	1.9	0.6	2316	3.3	4145	6.5	4210	1.9	12	4145	1.9	224.420	-S8000	40-P100/L4	
6.1	4502	1.0	0.6	3142	2.5	4418	6.1	4502	1.0	11	4418	1.0	238.252	-S4500	50-P100/L4	
5.8	4739	1.7	0.6	2607	2.9	4667	5.8	4739	1.7	10	4667	1.7	252.640	-S8000	40-P100/L4	
5.4	5025	0.9	0.5	3508	2.3	4932	5.4	5025	0.9	9.6	4932	0.9	265.956	-S4500	50-P100/L4	
5.1	5346	1.5	0.5	2941	2.6	5264	5.1	5346	1.5	9.0	5264	1.5	285.000	-S8000	40-P100/L4	
5.0	5463	0.8	0.5	3813	2.1	5362	5.0	5463	0.8	8.9	5362	0.8	289.151	-S4500	50-P100/L4	
4.8	5703	1.4	0.5	3137	2.4	5616	4.8	5703	1.4	8.5	5616	1.4	304.030	-S8000	40-P100/L4	
4.5	6060	1.3	0.4	3333	2.3	5967	4.5	6060	1.3	8.0	5967	1.3	323.040	-S8000	40-P100/L4	
3.9	7072	1.1	0.4	3890	1.9	6964	3.9	7072	1.1	6.8	6964	1.2	377.000	-S8000	40-P100/L4	

Selection tables, 4-pole motors

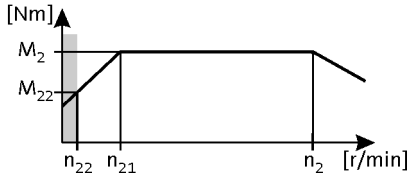

50 Hz: P_N = 4.0 kW
87 Hz: P_N = 7.35 kW

2-stage gearboxes

Mains operation 400 V, 50 Hz			Inverter operation 5 Hz -		- 20 ... 25 Hz		- 50 Hz (1:10)			- 87 Hz (1:17.4)			i	Product		
n_2 [r/min]	M_2 [Nm]	c	n_{22} [r/min]	M_{22} [Nm]	n_{21} [r/min]	M_2 [Nm]	n_2 [r/min]	M_2 [Nm]	c	n_2 [r/min]	M_2 [Nm]	c		g500	m5□□	
435	85	2.4	43	53	180	85	435	85	2.4				3.339	-S400	50-P112/M4	
371	100	3.4	37	62	153	100	371	100	3.4				3.920	-S660	50-P112/M4	
332	112	4.2	33	70	137	112	332	112	4.2				4.380	-S950	50-P112/M4	
317	117	2.1	32	73	131	117	317	117	2.1	560	122	1.7	4.579	-S400	50-P112/M4	
270	137	3.4	27	86	112	137	270	137	3.4	477	143	2.8	5.376	-S660	50-P112/M4	
270	138	3.7	27	86	111	138	270	138	3.7				5.391	-S950	50-P112/M4	
248	149	1.7	25	93	102	149	248	149	1.7	438	156	1.4	5.860	-S400	50-P112/M4	
241	154	4.8	24	96	100	154	241	154	4.8				6.029	-S2100	50-P112/M4	
241	154	3.4	24	96	99	154	241	154	3.4	425	160	2.7	6.038	-S950	50-P112/M4	
227	164	1.6	23	102	94	164	227	164	1.6	400	170	1.3	6.411	-S400	50-P112/M4	
226	164	3.4	23	102	94	164	226	164	3.4				6.417	-S660	50-P112/M4	
224	166	4.8	22	103	92	166	224	166	4.8				6.499	-S3100	50-P112/M4	
212	175	4.4	21	109	87	175	212	175	4.4				6.870	-S2100	50-P112/M4	
211	175	2.8	21	110	87	175	211	175	2.8	373	183	2.3	6.880	-S660	50-P112/M4	
199	186	3.2	20	116	82	186	199	186	3.2				7.311	-S660	50-P112/M4	
196	189	4.4	20	118	81	189	196	189	4.4				7.406	-S3100	50-P112/M4	
195	190	1.9	19	119	80	190	195	190	1.9				7.467	-S400	50-P112/M4	
189	196	2.6	19	123	78	196	189	196	2.6	333	204	2.1	7.702	-S950	50-P112/M4	
176	211	3.8	18	132	73	211	176	211	3.8				8.272	-S2100	50-P112/M4	
172	215	1.8	17	134	71	215	172	215	1.8				8.436	-S400	50-P112/M4	
165	224	2.8	17	140	68	224	165	224	2.8				8.800	-S660	50-P112/M4	
163	227	3.8	16	142	67	227	163	227	3.8				8.917	-S3100	50-P112/M4	
160	232	4.1	16	145	66	232	160	232	4.1				9.100	-S950	50-P112/M4	
145	256	2.4	15	160	60	256	145	256	2.4				10.027	-S660	50-P112/M4	
143	260	3.7	14	162	59	260	143	260	3.7				10.183	-S950	50-P112/M4	
142	261	1.5	14	163	59	261	142	261	1.5				10.240	-S400	50-P112/M4	
133	279	3.3	13	174	55	279	133	279	3.3	235	290	2.6	10.932	-S3100	50-P112/M4	
130	286	3.3	13	178	54	286	130	286	3.3				11.200	-S950	50-P112/M4	
129	287	2.3	13	179	53	287	129	287	2.3	228	299	1.9	11.262	-S660	50-P112/M4	
126	295	1.4	13	184	52	295	126	295	1.4				11.569	-S400	50-P112/M4	
118	314	2.1	12	196	49	314	118	314	2.1	208	327	1.7	12.320	-S660	50-P112/M4	
117	316	4.8	12	197	48	316	117	316	4.8				12.406	-S2100	50-P112/M4	
116	320	3.0	12	200	48	320	116	320	3.0				12.544	-S950	50-P112/M4	
113	327	2.0	11	204	47	327	113	327	2.0				12.832	-S660	50-P112/M4	
111	334	1.2	11	209	46	334	111	334	1.2				13.105	-S400	50-P112/M4	

Selection tables, 4-pole motors

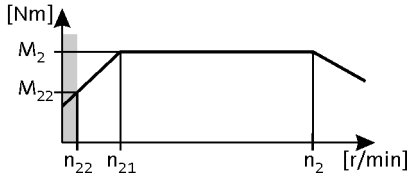

50 Hz: P_N = 4.0 kW
87 Hz: P_N = 7.35 kW

2-stage gearboxes

Mains operation 400 V, 50 Hz			Inverter operation 5 Hz -		- 20 ... 25 Hz		- 50 Hz (1:10)			- 87 Hz (1:17.4)			i	Product		
n_2 [r/min]	M_2 [Nm]	c	n_{22} [r/min]	M_{22} [Nm]	n_{21} [r/min]	M_2 [Nm]	n_2 [r/min]	M_2 [Nm]	c	n_2 [r/min]	M_2 [Nm]	c		g500	m5□□	
105	352	4.8	11	219	44	352	105	352	4.8				13.787	-S2100	50-P112/M4	
104	358	2.7	10	223	43	358	104	358	2.7				14.037	-S950	50-P112/M4	
104	358	1.8	10	223	43	358	104	358	1.8				14.037	-S660	50-P112/M4	
103	361	4.4	10	225	42	361	103	361	4.4				14.137	-S2100	50-P112/M4	
101	366	1.1	10	228	42	366	101	366	1.1				14.336	-S400	50-P112/M4	
100	373	4.8	9.9	232	41	373	100	373	4.8				14.606	-S3100	50-P112/M4	
98	378	1.1	9.8	236	41	378	98	378	1.1				14.806	-S400	50-P112/M4	
93	401	4.4	9.2	250	38	401	93	401	4.4				15.711	-S2100	50-P112/M4	
93	401	1.7	9.2	250	38	401	93	401	1.7	163	417	1.3	15.714	-S660	50-P112/M4	
91	408	2.3	9.1	255	38	408	91	408	2.3	160	425	1.9	16.000	-S950	50-P112/M4	
90	413	1.0	9.0	258	37	413	90	413	1.0				16.197	-S400	50-P112/M4	
89	418	4.7	8.9	261	37	418	89	418	4.7				16.381	-S4500	50-P112/M4	
88	421	4.8	8.8	263	36	421	88	421	4.8				16.517	-S3100	50-P112/M4	
87	425	4.4	8.7	265	36	425	87	425	4.4				16.644	-S3100	50-P112/M4	
85	434	3.8	8.5	271	35	434	85	434	3.8				17.022	-S2100	50-P112/M4	
81	457	2.1	8.1	285	34	457	81	457	2.1	143	475	1.7	17.905	-S950	50-P112/M4	
81	457	1.5	8.1	285	34	457	81	457	1.5	143	475	1.2	17.905	-S660	50-P112/M4	
80	466	0.9	7.9	291	33	466	80	466	0.9				18.286	-S400	50-P112/M4	
80	466	4.7	7.9	291	33	466	80	466	4.7				18.286	-S4500	50-P112/M4	
77	480	4.4	7.7	300	32	480	77	480	4.4				18.822	-S3100	50-P112/M4	
77	483	3.8	7.7	301	32	483	77	483	3.8	136	502	3.5	18.917	-S2100	50-P112/M4	
76	491	1.3	7.5	306	31	491	76	491	1.3	133	511	1.2	19.250	-S660	50-P112/M4	
74	500	1.9	7.4	312	31	500	74	500	1.9	131	520	1.7	19.600	-S950	50-P112/M4	
73	511	3.8	7.2	319	30	511	73	511	3.8	128	532	3.5	20.041	-S3100	50-P112/M4	
70	532	3.3	6.9	332	29	532	70	532	3.3	123	554	3.0	20.869	-S2100	50-P112/M4	
66	559	1.7	6.6	349	27	559	66	559	1.7	117	582	1.6	21.933	-S950	50-P112/M4	
66	559	1.2	6.6	349	27	559	66	559	1.2	117	582	1.1	21.933	-S660	50-P112/M4	
64	578	3.8	6.4	361	27	578	64	578	3.8	113	602	3.5	22.663	-S3100	50-P112/M4	
63	592	3.3	6.3	369	26	592	63	592	3.3	111	616	3.0	23.193	-S2100	50-P112/M4	
59	627	3.3	5.9	391	24	627	59	627	3.3	104	652	3.0	24.570	-S3100	50-P112/M4	
58	639	0.9	5.8	399	24	639	58	639	0.9	102	665	0.8	25.056	-S660	50-P112/M4	
57	651	1.5	5.7	406	24	651	57	651	1.5	101	677	1.3	25.511	-S950	50-P112/M4	
55	674	3.3	5.5	421	23	674	55	674	3.3	97	702	3.0	26.437	-S4500	50-P112/M4	
52	709	3.3	5.2	442	22	709	52	709	3.3	92	738	3.0	27.785	-S3100	50-P112/M4	
51	721	2.6	5.1	450	21	721	51	721	2.6	91	751	2.3	28.275	-S2100	50-P112/M4	

Selection tables, 4-pole motors

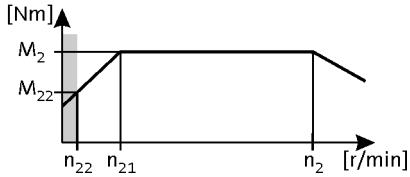

50 Hz: P_N = 4.0 kW
87 Hz: P_N = 7.35 kW

2-stage gearboxes

Mains operation 400 V, 50 Hz			Inverter operation 5 Hz -		- 20 ... 25 Hz		- 50 Hz (1:10)			- 87 Hz (1:17.4)			i	Product		
n_2 [r/min]	M_2 [Nm]	c	n_{22} [r/min]	M_{22} [Nm]	n_{21} [r/min]	M_2 [Nm]	n_2 [r/min]	M_2 [Nm]	c	n_2 [r/min]	M_2 [Nm]	c		g500	m5□□	
51	728	1.3	5.1	454	21	728	51	728	1.3	90	758	1.2	28.548	-S950	50-P112/M4	
51	728	0.9	5.1	454	21	728	51	728	0.9	90	758	0.8	28.548	-S660	50-P112/M4	
49	753	3.3	4.9	470	20	753	49	753	3.3	87	783	3.0	29.511	-S4500	50-P112/M4	
47	797	1.2	4.6	498	19	797	47	797	1.2	82	830	1.1	31.267	-S950	50-P112/M4	
46	801	2.6	4.6	500	19	801	46	801	2.6	82	834	2.5	31.422	-S2100	50-P112/M4	
45	829	2.7	4.5	517	19	829	45	829	2.7	79	863	2.6	32.489	-S4500	50-P112/M4	
44	849	2.6	4.4	530	18	849	44	849	2.6	77	884	2.5	33.289	-S3100	50-P112/M4	
42	876	2.2	4.2	546	18	876	42	876	2.2	75	912	2.1	34.333	-S2100	50-P112/M4	
42	892	1.1	4.1	557	17	892	42	892	1.1	73	929	1.0	34.989	-S950	50-P112/M4	
40	925	2.7	4.0	577	17	925	40	925	2.7	71	963	2.6	36.267	-S4500	50-P112/M4	
39	960	2.6	3.9	599	16	960	39	960	2.6	68	999	2.5	37.644	-S3100	50-P112/M4	
38	973	2.1	3.8	607	16	1013	38	973	2.1	67	1013	2.0	38.156	-S2100	50-P112/M4	
36	1031	2.2	3.6	643	15	1031	36	1031	2.2	64	1073	2.1	40.422	-S3100	50-P112/M4	
35	1072	2.2	3.4	669	14	1072	35	1072	2.2	61	1116	2.1	42.044	-S4500	50-P112/M4	
33	1133	1.8	3.3	707	14	1133	33	1133	1.8	58	1180	1.7	44.431	-S2100	50-P112/M4	
32	1166	2.2	3.2	727	13	1166	32	1166	2.2	56	1214	2.1	45.711	-S3100	50-P112/M4	
31	1197	2.2	3.1	747	13	1197	31	1197	2.2	55	1246	2.1	46.933	-S4500	50-P112/M4	
29	1259	1.6	2.9	786	12	1259	29	1259	1.6	52	1311	1.6	49.378	-S2100	50-P112/M4	
29	1301	1.8	2.8	812	12	1301	29	1301	1.8	50	1355	1.8	51.027	-S4500	50-P112/M4	
28	1334	1.8	2.8	832	12	1334	28	1334	1.8	49	1389	1.7	52.311	-S3100	50-P112/M4	
27	1375	1.4	2.7	858	11	1375	27	1375	1.4	48	1432	1.4	53.924	-S2100	50-P112/M4	
26	1453	1.8	2.5	906	11	1453	26	1453	1.8	45	1512	1.8	56.960	-S4500	50-P112/M4	
25	1509	1.8	2.5	941	10	1509	25	1509	1.8	43	1571	1.7	59.156	-S3100	50-P112/M4	
24	1528	1.3	2.4	954	10	1528	24	1528	1.3	43	1591	1.3	59.927	-S2100	50-P112/M4	
23	1619	1.4	2.3	1010	9.5	1619	23	1619	1.4	40	1685	1.3	63.487	-S3100	50-P112/M4	
23	1645	1.5	2.2	1026	9.3	1645	23	1645	1.5	40	1712	1.4	64.500	-S4500	50-P112/M4	
20	1831	1.3	2.0	1142	8.4	1831	20	1831	1.3	36	1906	1.3	71.793	-S3100	50-P112/M4	
20	1836	1.4	2.0	1146	8.3	1836	20	1836	1.4	36	1912	1.4	72.000	-S4500	50-P112/M4	

3-stage gearboxes

Mains operation 400 V, 50 Hz			Inverter operation 5 Hz -		- 20 ... 25 Hz		- 50 Hz (1:10)			- 87 Hz (1:17.4)			i	Product		
n_2 [r/min]	M_2 [Nm]	c	n_{22} [r/min]	M_{22} [Nm]	n_{21} [r/min]	M_2 [Nm]	n_2 [r/min]	M_2 [Nm]	c	n_2 [r/min]	M_2 [Nm]	c		g500	m5□□	
38	957	4.2	3.8	597	16	957	38	957	4.2	67	996	3.4	38.090	-S4500	50-P112/M4	
36	1006	1.9	3.6	628	15	1006	36	1006	1.9				40.056	-S2100	50-P112/M4	
34	1068	4.0	3.4	666	14	1068	34	1068	4.0	60	1112	3.2	42.520	-S4500	50-P112/M4	
33	1118	1.8	3.3	698	14	1118	33	1118	1.8				44.515	-S2100	50-P112/M4	
31	1185	2.5	3.1	739	13	1185	31	1185	2.5	54	1233	2.0	47.159	-S3100	50-P112/M4	
28	1326	3.4	2.7	827	11	1326	28	1326	3.4	49	1381	3.1	52.794	-S4500	50-P112/M4	
27	1340	2.3	2.7	836	11	1340	27	1340	2.3	48	1395	2.1	53.330	-S3100	50-P112/M4	

Selection tables, 4-pole motors

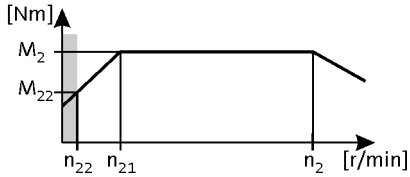

50 Hz: P_N = 4.0 kW
87 Hz: P_N = 7.35 kW

3-stage gearboxes

Mains operation 400 V, 50 Hz			Inverter operation 5 Hz -		- 20 ... 25 Hz		- 50 Hz (1:10)			- 87 Hz (1:17.4)			i	Product		
n_2 [r/min]	M_2 [Nm]	c	n_{22} [r/min]	M_{22} [Nm]	n_{21} [r/min]	M_2 [Nm]	n_2 [r/min]	M_2 [Nm]	c	n_2 [r/min]	M_2 [Nm]	c		g500	m5□□	
27	1380	1.5	2.6	861	11	1380	27	1380	1.5	47	1437	1.4	54.933	-S2100	50-P112/M4	
25	1481	3.0	2.5	924	10	1481	25	1481	3.0	44	1541	2.8	58.933	-S4500	50-P112/M4	
24	1534	1.3	2.4	957	9.8	1534	24	1534	1.3				61.049	-S2100	50-P112/M4	
23	1625	1.9	2.2	1014	9.3	1625	23	1625	1.9	40	1691	1.7	64.676	-S3100	50-P112/M4	
22	1632	2.8	2.2	1018	9.2	1632	22	1632	2.8	40	1699	2.5	64.978	-S4500	50-P112/M4	
21	1766	1.2	2.1	1102	8.5	1766	21	1766	1.2	37	1838	1.1	70.302	-S2100	50-P112/M4	
20	1822	2.5	2.0	1137	8.3	1822	20	1822	2.5	35	1897	2.4	72.533	-S4500	50-P112/M4	
20	1828	2.5	2.0	1141	8.2	1828	20	1828	2.5	35	1903	2.4	72.775	-S4500	50-P112/M4	
20	1837	1.7	2.0	1146	8.2	1837	20	1837	1.7	35	1913	1.6	73.138	-S3100	50-P112/M4	
19	1932	1.1	1.9	1205	7.8	1932	19	1932	1.1	33	2011	1.0	76.907	-S2100	50-P112/M4	
19	1963	1.0	1.9	1225	7.7	1963	19	1963	1.0	33	2043	1.0	78.128	-S2100	50-P112/M4	
19	1975	4.1	1.8	1087	9.2	1975	19	1975	4.1	33	2062	3.9	78.980	-S8000	40-P112/M4	
18	2041	2.2	1.8	1273	7.4	2041	18	2041	2.2	32	2124	2.1	81.237	-S4500	50-P112/M4	
18	2079	1.5	1.8	1297	7.2	2079	18	2079	1.5	31	2164	1.4	82.769	-S3100	50-P112/M4	
17	2147	1.0	1.7	1340	7.0	2147	17	2147	1.0				85.468	-S2100	50-P112/M4	
17	2181	3.7	1.7	1200	8.4	2181	17	2181	3.7	30	2277	3.5	87.200	-S8000	40-P112/M4	
16	2275	1.4	1.6	1419	6.6	2275	16	2275	1.4	28	2368	1.3	90.546	-S3100	50-P112/M4	
16	2332	1.9	1.6	1455	6.5	2332	16	2332	1.9	28	2427	1.9	92.825	-S4500	50-P112/M4	
16	2352	1.3	1.5	1467	6.4	2352	16	2352	1.3	27	2448	1.3	93.599	-S3100	50-P112/M4	
15	2464	0.8	1.5	1537	6.1	2464	15	2464	0.8				98.095	-S2100	50-P112/M4	
15	2481	3.2	1.5	1364	7.4	2481	15	2481	3.2	26	2589	3.1	99.180	-S8000	40-P112/M4	
14	2556	5.3	1.4	1406	7.1	2556	14	2556	5.3	25	2668	5.1	102.180	-S14000	40-P112/M4	
14	2572	1.2	1.4	1605	5.9	2572	14	2572	1.2	25	2678	1.2	102.393	-S3100	50-P112/M4	
14	2603	1.7	1.4	1624	5.8	2603	14	2603	1.7	25	2710	1.7	103.619	-S4500	50-P112/M4	
13	2784	4.9	1.3	1531	6.6	2784	13	2784	4.9	23	2906	4.7	111.300	-S14000	40-P112/M4	
13	2810	2.9	1.3	1546	6.5	2810	13	2810	2.9	23	2934	2.7	112.360	-S8000	40-P112/M4	
13	2857	1.6	1.3	1782	5.3	2857	13	2857	1.6	23	2974	1.5	113.711	-S4500	50-P112/M4	
13	2902	1.1	1.3	1810	5.2	2902	13	2902	1.1	22	3020	1.0	115.492	-S3100	50-P112/M4	
12	3139	4.3	1.2	1726	5.8	3139	12	3139	4.3	21	3276	4.2	125.490	-S14000	40-P112/M4	
12	3170	2.5	1.1	1744	5.8	3170	12	3170	2.5	20	3309	2.4	126.730	-S8000	40-P112/M4	
11	3189	1.4	1.1	1989	4.7	3189	11	3189	1.4	20	3319	1.4	126.933	-S4500	50-P112/M4	
11	3238	5.9	1.1	1781	5.6	3238	11	3238	5.9	20	3380	5.6	129.450	-S19000	40-P112/M4	
11	3281	0.9	1.1	2047	4.6	3281	11	3281	0.9	20	3415	0.9	130.603	-S3100	50-P112/M4	
10	3521	3.9	1.0	1937	5.2	3521	10	3521	3.9	18	3675	3.7	140.770	-S14000	40-P112/M4	
10	3537	2.3	1.0	1946	5.2	3537	10	3537	2.3	18	3693	2.2	141.430	-S8000	40-P112/M4	

Selection tables, 4-pole motors

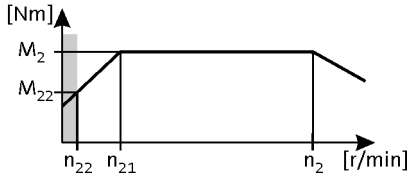

50 Hz: P_N = 4.0 kW
87 Hz: P_N = 7.35 kW

3-stage gearboxes

Mains operation 400 V, 50 Hz			Inverter operation 5 Hz -		- 20 ... 25 Hz		- 50 Hz (1:10)			- 87 Hz (1:17.4)			i	Product		
n_2 [r/min]	M_2 [Nm]	c	n_{22} [r/min]	M_{22} [Nm]	n_{21} [r/min]	M_2 [Nm]	n_2 [r/min]	M_2 [Nm]	c	n_2 [r/min]	M_2 [Nm]	c		g500	m5□□	
10	3554	0.9	1.0	2217	4.2	3554	10	3554	0.9	18	3700	0.8	141.478	-S3100	50-P112/M4	
10	3634	5.2	1.0	1999	5.0	3634	10	3634	5.2	18	3793	5.0	145.280	-S19000	40-P112/M4	
9.8	3718	1.2	1.0	2320	4.1	3718	9.8	3718	1.2	17	3870	1.2	148.005	-S4500	50-P112/M4	
9.3	3946	3.5	0.9	2170	4.6	3946	9.3	3946	3.5	16	4119	3.3	157.760	-S14000	40-P112/M4	
9.2	3975	2.0	0.9	2186	4.6	3975	9.2	3975	2.0	16	4149	1.9	158.910	-S8000	40-P112/M4	
8.9	4117	4.6	0.9	2265	4.4	4117	8.9	4117	4.6	16	4298	4.4	164.610	-S19000	40-P112/M4	
8.8	4151	1.1	0.9	2589	3.6	4151	8.8	4151	1.1	16	4320	1.0	165.215	-S4500	50-P112/M4	
8.3	4394	3.1	0.8	2417	4.2	4394	8.3	4394	3.1	15	4587	3.0	175.690	-S14000	40-P112/M4	
8.1	4488	1.8	0.8	2469	4.1	4488	8.1	4488	1.8	14	4685	1.7	179.440	-S8000	40-P112/M4	
8.0	4557	1.0	0.8	2843	3.3	4557	8.0	4557	1.0	14	4744	1.0	181.396	-S4500	50-P112/M4	
8.0	4553	4.2	0.8	2504	4.0	4553	8.0	4553	4.2	14	4753	4.0	182.030	-S19000	40-P112/M4	
7.4	4934	2.8	0.7	2714	3.7	4934	7.4	4934	2.8	13	5150	2.6	197.270	-S14000	40-P112/M4	
7.2	5087	0.9	0.7	3174	3.0	5087	7.2	5087	0.9	13	5295	0.9	202.489	-S4500	50-P112/M4	
7.2	5065	1.6	0.7	2786	3.6	5065	7.2	5065	1.6	13	5287	1.5	202.500	-S8000	40-P112/M4	
7.2	5095	3.7	0.7	2802	3.6	5095	7.2	5095	3.7	13	5318	3.6	203.690	-S19000	40-P112/M4	
6.7	5445	2.5	0.7	2995	3.4	5445	6.7	5445	2.5	12	5684	2.4	217.700	-S14000	40-P112/M4	
6.5	5613	1.4	0.6	3087	3.3	5613	6.5	5613	1.4	12	5859	1.4	224.420	-S8000	40-P112/M4	
6.4	5663	3.4	0.6	3115	3.2	5663	6.4	5663	3.4	11	5912	3.2	226.420	-S19000	40-P112/M4	
5.9	6196	3.1	0.6	3408	2.9	6196	5.9	6196	3.1	10	6467	2.9	247.710	-S19000	40-P112/M4	
5.9	6199	2.2	0.6	3410	2.9	6199	5.9	6199	2.2	10	6471	2.1	247.840	-S14000	40-P112/M4	
5.8	6319	1.3	0.6	3476	2.9	6319	5.8	6319	1.3	10	6596	1.2	252.640	-S8000	40-P112/M4	
5.3	6848	2.0	0.5	3767	2.7	6848	5.3	6848	2.0	9.4	7149	1.9	273.800	-S14000	40-P112/M4	
5.2	7010	2.7	0.5	3856	2.6	7010	5.2	7010	2.7	9.2	7317	2.6	280.270	-S19000	40-P112/M4	
5.1	7128	1.1	0.5	3921	2.6	7128	5.1	7128	1.1	9.0	7441	1.1	285.000	-S8000	40-P112/M4	
4.8	7604	1.1	0.5	4183	2.4	7604	4.8	7604	1.1	8.5	7938	1.0	304.030	-S8000	40-P112/M4	
4.8	7627	1.8	0.5	4195	2.4	7627	4.8	7627	1.8	8.4	7962	1.7	304.940	-S14000	40-P112/M4	
4.7	7773	2.4	0.5	4275	2.3	7773	4.7	7773	2.4	8.3	8114	2.3	310.760	-S19000	40-P112/M4	
4.5	8080	1.0	0.4	4444	2.3	8080	4.5	8080	1.0	8.0	8434	1.0	323.040	-S8000	40-P112/M4	
4.3	8579	1.6	0.4	4719	2.1	8579	4.3	8579	1.6	7.5	8956	1.5	343.010	-S14000	40-P112/M4	
4.2	8688	2.2	0.4	4779	2.1	8688	4.2	8688	2.2	7.4	9069	2.1	347.350	-S19000	40-P112/M4	
4.0	9204	1.5	0.4	5063	2.0	9204	4.0	9204	1.5	7.0	9608	1.4	368.000	-S14000	40-P112/M4	
3.9	9429	0.9	0.4	5187	1.9	9429	3.9	9429	0.9	6.8	9843	0.8	377.000	-S8000	40-P112/M4	

Selection tables, 4-pole motors

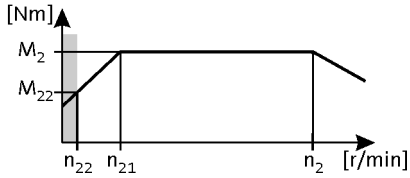

50 Hz: P_N = 5.5 kW
87 Hz: P_N = 9.6 kW

2-stage gearboxes

Mains operation 400 V, 50 Hz			Inverter operation 5 Hz -		- 20 ... 25 Hz		- 50 Hz (1:10)			- 87 Hz (1:17.4)			i	Product		
n_2 [r/min]	M_2 [Nm]	c	n_{22} [r/min]	M_{22} [Nm]	n_{21} [r/min]	M_2 [Nm]	n_2 [r/min]	M_2 [Nm]	c	n_2 [r/min]	M_2 [Nm]	c		g500	m5□□	
372	137	3.1	37	85	153	137	372	137	3.1				3.920	-S660	50-P132/M4	
333	153	4.1	33	95	137	153	333	153	4.1				4.380	-S950	50-P132/M4	
272	188	2.6	27	116	112	188	272	188	2.6				5.376	-S660	50-P132/M4	
271	188	3.7	27	117	111	188	271	188	3.7				5.391	-S950	50-P132/M4	
242	211	3.5	24	131	99	211	242	211	3.5				6.038	-S950	50-P132/M4	
228	224	2.7	23	139	94	224	228	224	2.7				6.417	-S660	50-P132/M4	
212	240	2.1	21	149	87	240	212	240	2.1				6.880	-S660	50-P132/M4	
200	255	2.3	20	158	82	255	200	255	2.3				7.311	-S660	50-P132/M4	
190	269	2.9	19	167	78	269	190	269	2.9				7.702	-S950	50-P132/M4	
177	289	5.2	18	179	73	289	177	289	5.2				8.272	-S2100	50-P132/M4	
166	307	2.1	17	191	68	307	166	307	2.1				8.800	-S660	50-P132/M4	
164	311	5.9	16	193	67	311	164	311	5.9				8.917	-S3100	50-P132/M4	
160	318	3.0	16	197	66	318	160	318	3.0				9.100	-S950	50-P132/M4	
155	330	5.7	15	205	64	330	155	330	5.7				9.452	-S2100	50-P132/M4	
146	350	1.8	15	217	60	350	146	350	1.8				10.027	-S660	50-P132/M4	
143	355	2.7	14	221	59	355	143	355	2.7				10.183	-S950	50-P132/M4	
139	367	5.1	14	227	57	367	139	367	5.1				10.504	-S2100	50-P132/M4	
134	382	5.1	13	237	55	382	134	382	5.1				10.932	-S3100	50-P132/M4	
130	391	2.4	13	243	54	391	130	391	2.4				11.200	-S950	50-P132/M4	
130	393	1.7	13	244	53	393	130	393	1.7				11.262	-S660	50-P132/M4	
119	430	1.5	12	267	49	430	119	430	1.5				12.320	-S660	50-P132/M4	
118	433	4.7	12	269	48	433	118	433	4.7				12.406	-S2100	50-P132/M4	
116	438	2.2	12	272	48	438	116	438	2.2				12.544	-S950	50-P132/M4	
114	448	1.5	11	278	47	448	114	448	1.5				12.832	-S660	50-P132/M4	
106	481	4.3	11	299	44	481	106	481	4.3				13.787	-S2100	50-P132/M4	
104	490	1.9	10	304	43	490	104	490	1.9				14.037	-S950	50-P132/M4	
104	490	1.4	10	304	43	490	104	490	1.4				14.037	-S660	50-P132/M4	
103	493	4.2	10	306	42	493	103	493	4.2				14.137	-S2100	50-P132/M4	
93	548	3.7	9.2	340	38	548	93	548	3.7				15.711	-S2100	50-P132/M4	
93	548	1.2	9.2	340	38	548	93	548	1.2				15.714	-S660	50-P132/M4	
91	558	1.7	9.1	346	38	558	91	558	1.7				16.000	-S950	50-P132/M4	
88	576	5.4	8.8	358	36	576	88	576	5.4				16.517	-S3100	50-P132/M4	
88	581	5.3	8.7	360	36	581	88	581	5.3				16.644	-S3100	50-P132/M4	
86	594	3.5	8.5	369	35	594	86	594	3.5				17.022	-S2100	50-P132/M4	
82	625	1.5	8.1	388	34	625	82	625	1.5				17.905	-S950	50-P132/M4	

Selection tables, 4-pole motors

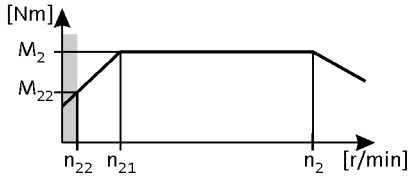

50 Hz: P_N = 5.5 kW
87 Hz: P_N = 9.6 kW

2-stage gearboxes

Mains operation 400 V, 50 Hz			Inverter operation 5 Hz -		- 20 ... 25 Hz		- 50 Hz (1:10)			- 87 Hz (1:17.4)			i	Product		
n_2 [r/min]	M_2 [Nm]	c	n_{22} [r/min]	M_{22} [Nm]	n_{21} [r/min]	M_2 [Nm]	n_2 [r/min]	M_2 [Nm]	c	n_2 [r/min]	M_2 [Nm]	c		g500	m5□□	
82	625	1.1	8.1	388	34	625	82	625	1.1				17.905	-S660	50-P132/M4	
78	657	4.7	7.7	408	32	657	78	657	4.7				18.822	-S3100	50-P132/M4	
77	660	3.1	7.7	410	32	660	77	660	3.1				18.917	-S2100	50-P132/M4	
76	672	1.0	7.5	417	31	672	76	672	1.0				19.250	-S660	50-P132/M4	
75	684	1.4	7.4	424	31	684	75	684	1.4				19.600	-S950	50-P132/M4	
73	699	4.4	7.2	434	30	699	73	699	4.4				20.041	-S3100	50-P132/M4	
73	700	5.7	7.2	434	30	700	73	700	5.7				20.067	-S4500	50-P132/M4	
70	728	2.8	6.9	452	29	728	70	728	2.8				20.869	-S2100	50-P132/M4	
67	766	1.2	6.6	475	27	766	67	766	1.2				21.933	-S950	50-P132/M4	
67	766	0.9	6.6	475	27	766	67	766	0.9				21.933	-S660	50-P132/M4	
65	782	5.7	6.5	485	27	782	65	782	5.7				22.400	-S4500	50-P132/M4	
64	791	3.9	6.4	491	27	791	64	791	3.9				22.663	-S3100	50-P132/M4	
63	809	2.5	6.3	502	26	809	63	809	2.5				23.193	-S2100	50-P132/M4	
59	858	3.6	5.9	532	24	858	59	858	3.6				24.570	-S3100	50-P132/M4	
57	890	1.1	5.7	552	24	890	57	890	1.1				25.511	-S950	50-P132/M4	
55	923	4.9	5.5	572	23	923	55	923	4.9				26.437	-S4500	50-P132/M4	
53	970	3.2	5.2	602	22	970	53	970	3.2				27.785	-S3100	50-P132/M4	
52	987	2.1	5.1	612	21	987	52	987	2.1				28.275	-S2100	50-P132/M4	
51	996	1.0	5.1	618	21	996	51	996	1.0				28.548	-S950	50-P132/M4	
50	1030	4.4	4.9	639	20	1030	50	1030	4.4				29.511	-S4500	50-P132/M4	
47	1097	1.9	4.6	680	19	1097	47	1097	1.9				31.422	-S2100	50-P132/M4	
45	1134	4.0	4.5	703	19	1134	45	1134	4.0				32.489	-S4500	50-P132/M4	
44	1162	2.7	4.4	721	18	1162	44	1162	2.7				33.289	-S3100	50-P132/M4	
43	1198	1.7	4.2	743	18	1198	43	1198	1.7				34.333	-S2100	50-P132/M4	
40	1266	3.6	4.0	785	17	1266	40	1266	3.6				36.267	-S4500	50-P132/M4	
39	1314	2.4	3.9	815	16	1314	39	1314	2.4				37.644	-S3100	50-P132/M4	
38	1332	1.5	3.8	826	16	1332	38	1332	1.5				38.156	-S2100	50-P132/M4	
38	1336	6.0	3.8	735	19	1336	38	1336	6.0				38.550	-S8000	40-P132/M4	
36	1411	2.2	3.6	875	15	1411	36	1411	2.2				40.422	-S3100	50-P132/M4	
35	1467	2.8	3.4	910	14	1467	35	1467	2.8				42.044	-S4500	50-P132/M4	
34	1521	5.3	3.3	837	17	1513	34	1521	5.3	59	1513	5.3	43.890	-S8000	40-P132/M4	
32	1595	1.9	3.2	990	13	1595	32	1595	1.9				45.711	-S3100	50-P132/M4	
31	1638	2.7	3.1	1016	13	1638	31	1638	2.7				46.933	-S4500	50-P132/M4	
30	1680	4.8	3.0	924	15	1671	30	1680	4.8	53	1671	4.8	48.480	-S8000	40-P132/M4	
29	1781	2.1	2.8	1105	12	1781	29	1781	2.1				51.027	-S4500	50-P132/M4	

Selection tables, 4-pole motors

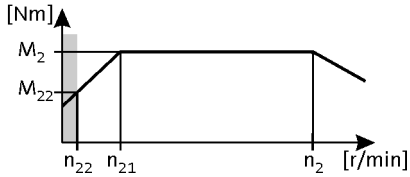

50 Hz: P_N = 5.5 kW
87 Hz: P_N = 9.6 kW

2-stage gearboxes

Mains operation 400 V, 50 Hz			Inverter operation 5 Hz -		- 20 ... 25 Hz		- 50 Hz (1:10)			- 87 Hz (1:17.4)			i	Product		
n_2 [r/min]	M_2 [Nm]	c	n_{22} [r/min]	M_{22} [Nm]	n_{21} [r/min]	M_2 [Nm]	n_2 [r/min]	M_2 [Nm]	c	n_2 [r/min]	M_2 [Nm]	c		g500	m5□□	
26	1988	2.0	2.5	1233	11	1988	26	1988	2.0				56.960	-S4500	50-P132/M4	

3-stage gearboxes

Mains operation 400 V, 50 Hz			Inverter operation 5 Hz -		- 20 ... 25 Hz		- 50 Hz (1:10)			- 87 Hz (1:17.4)			i	Product		
n_2 [r/min]	M_2 [Nm]	c	n_{22} [r/min]	M_{22} [Nm]	n_{21} [r/min]	M_2 [Nm]	n_2 [r/min]	M_2 [Nm]	c	n_2 [r/min]	M_2 [Nm]	c		g500	m5□□	
38	1310	3.2	3.8	812	16	1310	38	1310	3.2				38.090	-S4500	50-P132/M4	
37	1347	5.9	3.7	741	19	1339	37	1347	5.9	65	1339	5.0	39.430	-S8000	40-P132/M4	
36	1377	1.4	3.6	854	15	1377	36	1377	1.4				40.056	-S2100	50-P132/M4	
34	1462	2.9	3.4	907	14	1462	34	1462	2.9				42.520	-S4500	50-P132/M4	
33	1530	1.3	3.3	949	14	1530	33	1530	1.3				44.515	-S2100	50-P132/M4	
33	1547	5.2	3.2	851	16	1539	33	1547	5.2	57	1539	4.3	45.300	-S8000	40-P132/M4	
31	1621	1.8	3.1	1006	13	1621	31	1621	1.8				47.159	-S3100	50-P132/M4	
29	1708	4.7	2.9	940	15	1699	29	1708	4.7	52	1699	4.5	50.010	-S8000	40-P132/M4	
28	1815	2.5	2.7	1126	11	1815	28	1815	2.5				52.794	-S4500	50-P132/M4	
27	1833	1.7	2.7	1137	11	1833	27	1833	1.7				53.330	-S3100	50-P132/M4	
27	1889	1.1	2.6	1171	11	1889	27	1889	1.1				54.933	-S2100	50-P132/M4	
26	1925	4.2	2.6	1059	13	1915	26	1925	4.2	46	1915	4.0	56.370	-S8000	40-P132/M4	
25	2026	2.2	2.5	1257	10	2026	25	2026	2.2				58.933	-S4500	50-P132/M4	
24	2099	1.0	2.4	1302	9.8	2099	24	2099	1.0				61.049	-S2100	50-P132/M4	
23	2223	1.4	2.2	1379	9.3	2223	23	2223	1.4				64.676	-S3100	50-P132/M4	
23	2234	2.0	2.2	1386	9.2	2234	23	2234	2.0				64.978	-S4500	50-P132/M4	
21	2349	3.4	2.1	1292	11	2336	21	2349	3.4	38	2336	3.3	68.760	-S8000	40-P132/M4	
21	2417	0.9	2.1	1499	8.5	2417	21	2417	0.9				70.302	-S2100	50-P132/M4	
20	2494	1.8	2.0	1547	8.3	2494	20	2494	1.8				72.533	-S4500	50-P132/M4	
20	2502	1.8	2.0	1552	8.2	2502	20	2502	1.8				72.775	-S4500	50-P132/M4	
20	2514	1.2	2.0	1560	8.2	2514	20	2514	1.2				73.138	-S3100	50-P132/M4	
20	2522	5.4	2.0	1388	10	2509	20	2522	5.4	35	2509	5.4	73.850	-S14000	40-P132/M4	
19	2698	3.0	1.8	1484	9.3	2683	19	2698	3.0	33	2683	3.0	78.980	-S8000	40-P132/M4	
18	2793	1.6	1.8	1732	7.4	2793	18	2793	1.6				81.237	-S4500	50-P132/M4	
18	2846	1.1	1.8	1765	7.2	2846	18	2846	1.1				82.769	-S3100	50-P132/M4	
17	2978	2.7	1.7	1638	8.4	2962	17	2978	2.7	30	2962	2.7	87.200	-S8000	40-P132/M4	
16	3075	4.4	1.6	1691	8.2	3058	16	3075	4.4	29	3058	4.5	90.030	-S14000	40-P132/M4	
16	3113	1.0	1.6	1931	6.6	3113	16	3113	1.0				90.546	-S3100	50-P132/M4	
16	3191	1.4	1.6	1979	6.5	3191	16	3191	1.4				92.825	-S4500	50-P132/M4	
16	3218	1.0	1.5	1996	6.4	3218	16	3218	1.0				93.599	-S3100	50-P132/M4	
15	3388	2.4	1.5	1863	7.4	3369	15	3388	2.4	26	3369	2.4	99.180	-S8000	40-P132/M4	
14	3490	3.9	1.4	1920	7.2	3471	14	3490	3.9	25	3471	3.9	102.180	-S14000	40-P132/M4	
14	3520	0.9	1.4	2183	5.9	3520	14	3520	0.9				102.393	-S3100	50-P132/M4	
14	3562	1.3	1.4	2210	5.8	3562	14	3562	1.3				103.619	-S4500	50-P132/M4	

Selection tables, 4-pole motors

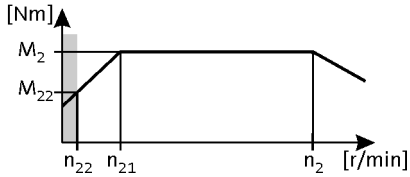

50 Hz: P_N = 5.5 kW
87 Hz: P_N = 9.6 kW

3-stage gearboxes

Mains operation 400 V, 50 Hz			Inverter operation 5 Hz -		- 20 ... 25 Hz		- 50 Hz (1:10)			- 87 Hz (1:17.4)			i	Product		
n_2 [r/min]	M_2 [Nm]	c	n_{22} [r/min]	M_{22} [Nm]	n_{21} [r/min]	M_2 [Nm]	n_2 [r/min]	M_2 [Nm]	c	n_2 [r/min]	M_2 [Nm]	c		g500	m5□□	
14	3603	5.3	1.4	1982	7.0	3583	14	3603	5.3	25	3583	5.3	105.480	-S19000	40-P132/M4	
13	3802	3.6	1.3	2091	6.6	3781	13	3802	3.6	23	3781	3.6	111.300	-S14000	40-P132/M4	
13	3838	2.1	1.3	2111	6.5	3817	13	3838	2.1	23	3817	2.1	112.360	-S8000	40-P132/M4	
13	3909	1.2	1.3	2425	5.3	3909	13	3909	1.2				113.711	-S4500	50-P132/M4	
13	4006	4.7	1.2	2203	6.3	3984	13	4006	4.7	22	3984	4.8	117.270	-S19000	40-P132/M4	
12	4286	3.2	1.2	2358	5.9	4263	12	4286	3.2	21	4263	3.2	125.490	-S14000	40-P132/M4	
12	4329	1.9	1.1	2381	5.8	4305	12	4329	1.9	20	4305	1.9	126.730	-S8000	40-P132/M4	
12	4364	1.0	1.1	2707	4.7	4364	12	4364	1.0				126.933	-S4500	50-P132/M4	
11	4422	4.3	1.1	2432	5.7	4397	11	4422	4.3	20	4397	4.3	129.450	-S19000	40-P132/M4	
10	4808	2.8	1.0	2645	5.2	4782	10	4808	2.8	18	4782	2.8	140.770	-S14000	40-P132/M4	
10	4831	1.7	1.0	2657	5.2	4804	10	4831	1.7	18	4804	1.7	141.430	-S8000	40-P132/M4	
10	4962	3.8	1.0	2729	5.1	4935	10	4962	3.8	18	4935	3.9	145.280	-S19000	40-P132/M4	
9.9	5088	0.9	1.0	3156	4.1	5088	9.9	5088	0.9				148.005	-S4500	50-P132/M4	
9.3	5389	2.5	0.9	2964	4.7	5359	9.3	5389	2.5	16	5359	2.5	157.760	-S14000	40-P132/M4	
9.3	5428	1.5	0.9	2986	4.6	5398	9.3	5428	1.5	16	5398	1.5	158.910	-S8000	40-P132/M4	
8.9	5623	3.4	0.9	3093	4.5	5592	8.9	5623	3.4	16	5592	3.4	164.610	-S19000	40-P132/M4	
8.4	6001	2.3	0.8	3301	4.2	5968	8.4	6001	2.3	15	5968	2.3	175.690	-S14000	40-P132/M4	
8.2	6129	1.3	0.8	3371	4.1	6095	8.2	6129	1.3	14	6095	1.3	179.440	-S8000	40-P132/M4	
8.1	6218	3.1	0.8	3420	4.0	6183	8.1	6218	3.1	14	6183	3.1	182.030	-S19000	40-P132/M4	
7.5	6738	2.0	0.7	3706	3.7	6701	7.5	6738	2.0	13	6701	2.0	197.270	-S14000	40-P132/M4	
7.3	6917	1.2	0.7	3805	3.6	6879	7.3	6917	1.2	13	6879	1.2	202.500	-S8000	40-P132/M4	
7.2	6957	2.7	0.7	3827	3.6	6919	7.2	6957	2.7	13	6919	2.8	203.690	-S19000	40-P132/M4	
6.8	7436	1.8	0.7	4090	3.4	7395	6.8	7436	1.8	12	7395	1.8	217.700	-S14000	40-P132/M4	
6.6	7665	1.0	0.6	4216	3.3	7623	6.6	7665	1.0	12	7623	1.1	224.420	-S8000	40-P132/M4	
6.5	7734	2.5	0.6	4254	3.2	7691	6.5	7734	2.5	11	7691	2.5	226.420	-S19000	40-P132/M4	
5.9	8461	2.3	0.6	4654	3.0	8414	5.9	8461	2.3	10	8414	2.3	247.710	-S19000	40-P132/M4	
5.9	8465	1.6	0.6	4656	3.0	8419	5.9	8465	1.6	10	8419	1.6	247.840	-S14000	40-P132/M4	
5.8	8629	0.9	0.6	4747	2.9	8582	5.8	8629	0.9	10	8582	0.9	252.640	-S8000	40-P132/M4	
5.4	9352	1.5	0.5	5144	2.7	9301	5.4	9352	1.5	9.4	9301	1.5	273.800	-S14000	40-P132/M4	
5.2	9573	2.0	0.5	5266	2.6	9520	5.2	9573	2.0	9.2	9520	2.0	280.270	-S19000	40-P132/M4	
5.2	9735	0.8	0.5	5354	2.6	9681	5.2	9735	0.8	9.1	9681	0.8	285.000	-S8000	40-P132/M4	
4.8	10416	1.3	0.5	5729	2.4	10358	4.8	10416	1.3	8.5	10358	1.3	304.940	-S14000	40-P132/M4	
4.7	10615	1.8	0.5	5838	2.4	10556	4.7	10615	1.8	8.3	10556	1.8	310.760	-S19000	40-P132/M4	
4.3	11716	1.2	0.4	6444	2.1	11652	4.3	11716	1.2	7.5	11652	1.2	343.010	-S14000	40-P132/M4	
4.2	11864	1.6	0.4	6526	2.1	11799	4.2	11864	1.6	7.4	11799	1.6	347.350	-S19000	40-P132/M4	

Selection tables, 4-pole motors

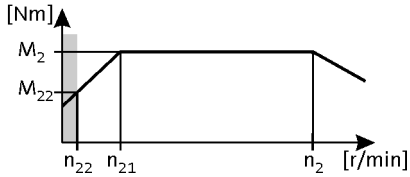

50 Hz: P_N = 5.5 kW
87 Hz: P_N = 9.6 kW

3-stage gearboxes

Mains operation 400 V, 50 Hz			Inverter operation 5 Hz -		- 20 ... 25 Hz		- 50 Hz (1:10)			- 87 Hz (1:17.4)			i	Product		
n_2 [r/min]	M_2 [Nm]	c	n_{22} [r/min]	M_{22} [Nm]	n_{21} [r/min]	M_2 [Nm]	n_2 [r/min]	M_2 [Nm]	c	n_2 [r/min]	M_2 [Nm]	c		g500	m5□□	
4.0	12570	1.1	0.4	6914	2.0	12501	4.0	12570	1.1	7.0	12501	1.1	368.000	-S14000	40-P132/M4	

Selection tables, 4-pole motors

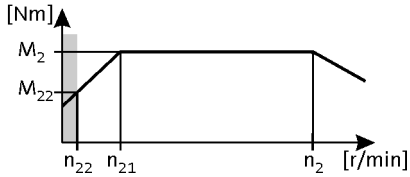

50 Hz: P_N = 7.5 kW
87 Hz: P_N = 13.1 kW

2-stage gearboxes

Mains operation 400 V, 50 Hz			Inverter operation 5 Hz -		- 20 ... 25 Hz		- 50 Hz (1:10)			- 87 Hz (1:17.4)			i	Product		
n_2 [r/min]	M_2 [Nm]	c	n_{22} [r/min]	M_{22} [Nm]	n_{21} [r/min]	M_2 [Nm]	n_2 [r/min]	M_2 [Nm]	c	n_2 [r/min]	M_2 [Nm]	c		g500	m5□□	
377	184	2.3	37	117	153	184	377	184	2.3				3.920	-S660	50-P132/L4	
337	206	3.0	33	130	137	206	337	206	3.0				4.380	-S950	50-P132/L4	
322	216	5.2	32	137	131	216	322	216	5.2				4.593	-S2100	50-P132/L4	
298	233	5.2	29	147	121	233	298	233	5.2				4.951	-S3100	50-P132/L4	
275	253	2.0	27	160	112	253	275	253	2.0				5.376	-S660	50-P132/L4	
274	254	2.7	27	161	111	254	274	254	2.7				5.391	-S950	50-P132/L4	
245	284	4.8	24	180	100	284	245	284	4.8				6.029	-S2100	50-P132/L4	
245	284	2.6	24	180	99	284	245	284	2.6				6.038	-S950	50-P132/L4	
230	302	2.0	23	191	94	302	230	302	2.0				6.417	-S660	50-P132/L4	
227	306	4.8	22	194	92	306	227	306	4.8				6.499	-S3100	50-P132/L4	
215	323	4.6	21	205	87	323	215	323	4.6				6.870	-S2100	50-P132/L4	
215	324	1.5	21	205	87	324	215	324	1.5				6.880	-S660	50-P132/L4	
209	332	5.2	21	210	85	332	209	332	5.2				7.056	-S4500	50-P132/L4	
202	344	1.7	20	218	82	344	202	344	1.7				7.311	-S660	50-P132/L4	
199	348	4.8	20	221	81	348	199	348	4.8				7.406	-S3100	50-P132/L4	
192	362	2.2	19	229	78	362	192	362	2.2				7.702	-S950	50-P132/L4	
179	389	3.8	18	246	73	389	179	389	3.8				8.272	-S2100	50-P132/L4	
168	414	1.5	17	262	68	414	168	414	1.5				8.800	-S660	50-P132/L4	
166	420	4.4	16	266	67	420	166	420	4.4				8.917	-S3100	50-P132/L4	
162	428	2.2	16	271	66	428	162	428	2.2				9.100	-S950	50-P132/L4	
156	445	4.2	15	281	64	445	156	445	4.2				9.452	-S2100	50-P132/L4	
147	472	1.3	15	299	60	472	147	472	1.3				10.027	-S660	50-P132/L4	
145	479	2.0	14	303	59	479	145	479	2.0				10.183	-S950	50-P132/L4	
141	494	3.8	14	313	57	494	141	494	3.8				10.504	-S2100	50-P132/L4	
135	514	3.8	13	326	55	514	135	514	3.8				10.932	-S3100	50-P132/L4	
133	524	5.2	13	331	54	524	133	524	5.2				11.128	-S3100	50-P132/L4	
132	527	1.8	13	334	54	527	132	527	1.8				11.200	-S950	50-P132/L4	
131	530	1.3	13	335	53	530	131	530	1.3				11.262	-S660	50-P132/L4	
120	580	1.1	12	367	49	580	120	580	1.1				12.320	-S660	50-P132/L4	
119	584	3.5	12	369	48	584	119	584	3.5				12.406	-S2100	50-P132/L4	
118	590	1.6	12	374	48	590	118	590	1.6				12.544	-S950	50-P132/L4	
117	592	5.0	12	375	48	592	117	592	5.0				12.584	-S3100	50-P132/L4	
115	604	1.1	11	382	47	604	115	604	1.1				12.832	-S660	50-P132/L4	
115	604	5.2	11	382	47	604	115	604	5.2				12.843	-S4500	50-P132/L4	
107	649	3.2	11	411	44	649	107	649	3.2				13.787	-S2100	50-P132/L4	

Selection tables, 4-pole motors

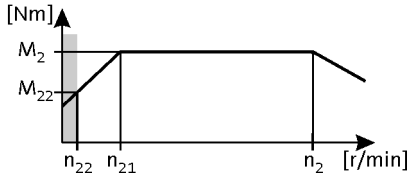

50 Hz: P_N = 7.5 kW
87 Hz: P_N = 13.1 kW

2-stage gearboxes

Mains operation 400 V, 50 Hz			Inverter operation 5 Hz -		- 20 ... 25 Hz		- 50 Hz (1:10)			- 87 Hz (1:17.4)			i	Product		
n_2 [r/min]	M_2 [Nm]	c	n_{22} [r/min]	M_{22} [Nm]	n_{21} [r/min]	M_2 [Nm]	n_2 [r/min]	M_2 [Nm]	c	n_2 [r/min]	M_2 [Nm]	c		g500	m5□□	
105	660	1.4	10	418	43	660	105	660	1.4				14.037	-S950	50-P132/L4	
105	660	1.0	10	418	43	660	105	660	1.0				14.037	-S660	50-P132/L4	
105	665	3.1	10	421	42	665	105	665	3.1				14.137	-S2100	50-P132/L4	
103	674	5.2	10	427	42	674	103	674	5.2				14.336	-S4500	50-P132/L4	
101	687	4.5	9.9	435	41	687	101	687	4.5				14.606	-S3100	50-P132/L4	
94	739	2.8	9.2	468	38	739	94	739	2.8				15.711	-S2100	50-P132/L4	
94	739	0.9	9.2	468	38	739	94	739	0.9				15.714	-S660	50-P132/L4	
92	753	1.3	9.1	476	38	753	92	753	1.3				16.000	-S950	50-P132/L4	
90	771	4.8	8.9	488	37	771	90	771	4.8				16.381	-S4500	50-P132/L4	
89	777	4.0	8.8	492	36	777	89	777	4.0				16.517	-S3100	50-P132/L4	
89	783	4.0	8.7	496	36	783	89	783	4.0				16.644	-S3100	50-P132/L4	
87	801	2.6	8.5	507	35	801	87	801	2.6				17.022	-S2100	50-P132/L4	
83	842	1.1	8.1	533	34	842	83	842	1.1				17.905	-S950	50-P132/L4	
81	860	4.8	7.9	544	33	860	81	860	4.8				18.286	-S4500	50-P132/L4	
79	886	3.5	7.7	560	32	886	79	886	3.5				18.822	-S3100	50-P132/L4	
78	890	2.3	7.7	563	32	890	78	890	2.3				18.917	-S2100	50-P132/L4	
75	922	1.0	7.4	584	31	922	75	922	1.0				19.600	-S950	50-P132/L4	
74	943	3.3	7.2	597	30	943	74	943	3.3				20.041	-S3100	50-P132/L4	
74	944	4.2	7.2	598	30	944	74	944	4.2				20.067	-S4500	50-P132/L4	
71	982	2.1	6.9	621	29	982	71	982	2.1				20.869	-S2100	50-P132/L4	
67	1032	0.9	6.6	653	27	1032	67	1032	0.9				21.933	-S950	50-P132/L4	
66	1054	4.2	6.5	667	27	1054	66	1054	4.2				22.400	-S4500	50-P132/L4	
65	1066	2.9	6.4	675	27	1066	65	1066	2.9				22.663	-S3100	50-P132/L4	
64	1091	1.9	6.3	691	26	1091	64	1091	1.9				23.193	-S2100	50-P132/L4	
60	1156	2.7	5.9	732	24	1156	60	1156	2.7				24.570	-S3100	50-P132/L4	
56	1244	3.6	5.5	787	23	1244	56	1244	3.6				26.437	-S4500	50-P132/L4	
53	1307	2.4	5.2	827	22	1307	53	1307	2.4				27.785	-S3100	50-P132/L4	
52	1330	1.5	5.1	842	21	1330	52	1330	1.5				28.275	-S2100	50-P132/L4	
50	1388	3.2	4.9	879	20	1388	50	1388	3.2				29.511	-S4500	50-P132/L4	
47	1475	5.4	4.7	811	24	1466	47	1475	5.4	83	1466	5.5	31.110	-S8000	40-P132/L4	
47	1478	1.4	4.6	936	19	1478	47	1478	1.4				31.422	-S2100	50-P132/L4	
46	1528	2.9	4.5	967	19	1528	46	1528	2.9				32.489	-S4500	50-P132/L4	
44	1566	2.0	4.4	991	18	1566	44	1566	2.0				33.289	-S3100	50-P132/L4	
43	1615	1.3	4.2	1022	18	1615	43	1615	1.3				34.333	-S2100	50-P132/L4	
42	1656	4.8	4.2	911	21	1646	42	1656	4.8	74	1646	4.9	34.930	-S8000	40-P132/L4	

Selection tables, 4-pole motors

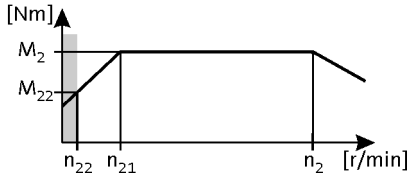

50 Hz: P_N = 7.5 kW
87 Hz: P_N = 13.1 kW

2-stage gearboxes

Mains operation 400 V, 50 Hz			Inverter operation 5 Hz -		- 20 ... 25 Hz		- 50 Hz (1:10)			- 87 Hz (1:17.4)			i	Product		
n_2 [r/min]	M_2 [Nm]	c	n_{22} [r/min]	M_{22} [Nm]	n_{21} [r/min]	M_2 [Nm]	n_2 [r/min]	M_2 [Nm]	c	n_2 [r/min]	M_2 [Nm]	c		g500	m5□□	
41	1706	2.6	4.0	1080	17	1706	41	1706	2.6				36.267	-S4500	50-P132/L4	
39	1771	1.8	3.9	1121	16	1771	39	1771	1.8				37.644	-S3100	50-P132/L4	
39	1795	1.1	3.8	1136	16	1795	39	1795	1.1				38.156	-S2100	50-P132/L4	
38	1828	4.4	3.8	1006	19	1817	38	1828	4.4	67	1817	4.4	38.550	-S8000	40-P132/L4	
37	1902	1.6	3.6	1204	15	1902	37	1902	1.6				40.422	-S3100	50-P132/L4	
35	1978	2.1	3.4	1252	14	1978	35	1978	2.1				42.044	-S4500	50-P132/L4	
33	2081	3.8	3.3	1145	17	2068	33	2081	3.8	59	2068	3.9	43.890	-S8000	40-P132/L4	
33	2131	5.8	3.2	1172	16	2117	33	2131	5.8	57	2117	5.9	44.930	-S14000	40-P132/L4	
32	2151	1.4	3.2	1361	13	2151	32	2151	1.4				45.711	-S3100	50-P132/L4	
32	2208	2.0	3.1	1397	13	2208	32	2208	2.0				46.933	-S4500	50-P132/L4	
30	2299	3.5	3.0	1265	15	2285	30	2299	3.5	53	2285	3.5	48.480	-S8000	40-P132/L4	
29	2401	1.5	2.8	1519	12	2401	29	2401	1.5				51.027	-S4500	50-P132/L4	
26	2680	1.5	2.5	1696	11	2680	26	2680	1.5				56.960	-S4500	50-P132/L4	

3-stage gearboxes

Mains operation 400 V, 50 Hz			Inverter operation 5 Hz -		- 20 ... 25 Hz		- 50 Hz (1:10)			- 87 Hz (1:17.4)			i	Product		
n_2 [r/min]	M_2 [Nm]	c	n_{22} [r/min]	M_{22} [Nm]	n_{21} [r/min]	M_2 [Nm]	n_2 [r/min]	M_2 [Nm]	c	n_2 [r/min]	M_2 [Nm]	c		g500	m5□□	
45	1511	5.0	4.5	831	23	1502	45	1511	5.0	80	1502	4.2	32.330	-S8000	40-P132/L4	
39	1765	2.4	3.8	1117	16	1765	39	1765	2.4				38.090	-S4500	50-P132/L4	
37	1843	4.3	3.7	1014	19	1831	37	1843	4.3	65	1831	3.6	39.430	-S8000	40-P132/L4	
37	1856	1.1	3.6	1175	15	1856	37	1856	1.1				40.056	-S2100	50-P132/L4	
35	1970	2.2	3.4	1247	14	1970	35	1970	2.2				42.520	-S4500	50-P132/L4	
33	2063	1.0	3.3	1306	14	2063	33	2063	1.0				44.515	-S2100	50-P132/L4	
32	2117	3.8	3.2	1165	16	2104	32	2117	3.8	57	2104	3.2	45.300	-S8000	40-P132/L4	
31	2185	1.4	3.1	1383	13	2185	31	2185	1.4				47.159	-S3100	50-P132/L4	
29	2337	3.4	2.9	1286	15	2323	29	2337	3.4	52	2323	3.3	50.010	-S8000	40-P132/L4	
29	2366	5.8	2.9	1302	15	2351	29	2366	5.8	51	2351	5.5	50.630	-S14000	40-P132/L4	
28	2447	1.8	2.7	1548	11	2447	28	2447	1.8				52.794	-S4500	50-P132/L4	
28	2471	1.2	2.7	1564	11	2471	28	2471	1.2				53.330	-S3100	50-P132/L4	
27	2546	0.8	2.6	1611	11	2546	27	2546	0.8				54.933	-S2100	50-P132/L4	
26	2635	3.0	2.6	1449	13	2618	26	2635	3.0	46	2618	2.9	56.370	-S8000	40-P132/L4	
25	2731	1.7	2.5	1728	10	2731	25	2731	1.7				58.933	-S4500	50-P132/L4	
23	2997	1.0	2.2	1897	9.3	2997	23	2997	1.0				64.676	-S3100	50-P132/L4	
23	3026	4.5	2.2	1665	11	3007	23	3026	4.5	40	3007	4.3	64.750	-S14000	40-P132/L4	
23	3011	1.5	2.2	1906	9.2	3011	23	3011	1.5				64.978	-S4500	50-P132/L4	
21	3214	2.5	2.1	1768	11	3193	21	3214	2.5	37	3193	2.4	68.760	-S8000	40-P132/L4	
20	3361	1.3	2.0	2127	8.3	3361	20	3361	1.3				72.533	-S4500	50-P132/L4	
20	3372	1.3	2.0	2134	8.2	3372	20	3372	1.3				72.775	-S4500	50-P132/L4	
20	3389	0.9	2.0	2145	8.2	3389	20	3389	0.9				73.138	-S3100	50-P132/L4	

Selection tables, 4-pole motors

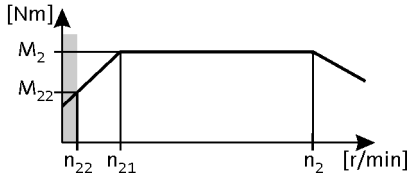

50 Hz: P_N = 7.5 kW
87 Hz: P_N = 13.1 kW

3-stage gearboxes

Mains operation 400 V, 50 Hz			Inverter operation 5 Hz -		- 20 ... 25 Hz		- 50 Hz (1:10)			- 87 Hz (1:17.4)			i	Product		
n_2 [r/min]	M_2 [Nm]	c	n_{22} [r/min]	M_{22} [Nm]	n_{21} [r/min]	M_2 [Nm]	n_2 [r/min]	M_2 [Nm]	c	n_2 [r/min]	M_2 [Nm]	c		g500	m5□□	
20	3451	3.9	2.0	1898	10	3430	20	3451	3.9	35	3430	4.0	73.850	-S14000	40-P132/L4	
19	3642	5.2	1.9	2003	9.4	3619	19	3642	5.2	33	3619	5.3	77.920	-S19000	40-P132/L4	
19	3691	2.2	1.8	2030	9.3	3668	19	3691	2.2	33	3668	2.2	78.980	-S8000	40-P132/L4	
18	3765	1.2	1.8	2383	7.4	3765	18	3765	1.2				81.237	-S4500	50-P132/L4	
18	3836	0.8	1.8	2427	7.2	3836	18	3836	0.8				82.769	-S3100	50-P132/L4	
17	4075	2.0	1.7	2242	8.4	4050	17	4075	2.0	30	4050	2.0	87.200	-S8000	40-P132/L4	
17	4096	4.6	1.7	2253	8.4	4071	17	4096	4.6	29	4071	4.7	87.650	-S19000	40-P132/L4	
16	4208	3.2	1.6	2314	8.2	4181	16	4208	3.2	29	4181	3.3	90.030	-S14000	40-P132/L4	
16	4302	1.1	1.6	2722	6.5	4302	16	4302	1.1				92.825	-S4500	50-P132/L4	
15	4635	1.7	1.5	2550	7.4	4606	15	4635	1.7	26	4606	1.7	99.180	-S8000	40-P132/L4	
14	4775	2.9	1.4	2627	7.2	4746	14	4775	2.9	25	4746	2.9	102.180	-S14000	40-P132/L4	
14	4802	0.9	1.4	3039	5.8	4802	14	4802	0.9				103.619	-S4500	50-P132/L4	
14	4930	3.9	1.4	2712	7.0	4899	14	4930	3.9	24	4899	3.9	105.480	-S19000	40-P132/L4	
13	5202	2.6	1.3	2861	6.6	5169	13	5202	2.6	23	5169	2.6	111.300	-S14000	40-P132/L4	
13	5251	1.5	1.3	2888	6.5	5218	13	5251	1.5	23	5218	1.5	112.360	-S8000	40-P132/L4	
13	5269	0.9	1.3	3335	5.3	5269	13	5269	0.9				113.711	-S4500	50-P132/L4	
13	5481	3.5	1.2	3015	6.3	5446	13	5481	3.5	22	5446	3.5	117.270	-S19000	40-P132/L4	
12	5865	2.3	1.2	3226	5.9	5828	12	5865	2.3	21	5828	2.3	125.490	-S14000	40-P132/L4	
12	5923	1.4	1.1	3258	5.8	5886	12	5923	1.4	20	5886	1.4	126.730	-S8000	40-P132/L4	
11	6050	3.1	1.1	3328	5.7	6012	11	6050	3.1	20	6012	3.2	129.450	-S19000	40-P132/L4	
10	6579	2.1	1.0	3619	5.2	6538	10	6579	2.1	18	6538	2.1	140.770	-S14000	40-P132/L4	
10	6610	1.2	1.0	3636	5.2	6568	10	6610	1.2	18	6568	1.2	141.430	-S8000	40-P132/L4	
10	6790	2.8	1.0	3735	5.1	6747	10	6790	2.8	18	6747	2.8	145.280	-S19000	40-P132/L4	
9.3	7373	1.8	0.9	4056	4.7	7327	9.3	7373	1.8	16	7327	1.9	157.760	-S14000	40-P132/L4	
9.2	7427	1.1	0.9	4085	4.6	7380	9.2	7427	1.1	16	7380	1.1	158.910	-S8000	40-P132/L4	
8.9	7693	2.5	0.9	4232	4.5	7645	8.9	7693	2.5	16	7645	2.5	164.610	-S19000	40-P132/L4	
8.3	8211	1.7	0.8	4516	4.2	8160	8.3	8211	1.7	15	8160	1.7	175.690	-S14000	40-P132/L4	
8.2	8386	1.0	0.8	4613	4.1	8334	8.2	8386	1.0	14	8334	1.0	179.440	-S8000	40-P132/L4	
8.0	8507	2.2	0.8	4679	4.0	8454	8.0	8507	2.2	14	8454	2.3	182.030	-S19000	40-P132/L4	
7.4	9220	1.5	0.7	5071	3.7	9162	7.4	9220	1.5	13	9162	1.5	197.270	-S14000	40-P132/L4	
7.2	9464	0.9	0.7	5206	3.6	9405	7.2	9464	0.9	13	9405	0.9	202.500	-S8000	40-P132/L4	
7.2	9520	2.0	0.7	5236	3.6	9460	7.2	9520	2.0	13	9460	2.0	203.690	-S19000	40-P132/L4	
6.7	10174	1.3	0.7	5596	3.4	10111	6.7	10174	1.3	12	10111	1.4	217.700	-S14000	40-P132/L4	
6.5	10582	1.8	0.6	5821	3.2	10516	6.5	10582	1.8	11	10516	1.8	226.420	-S19000	40-P132/L4	
5.9	11577	1.6	0.6	6368	3.0	11504	5.9	11577	1.6	10	11504	1.7	247.710	-S19000	40-P132/L4	

Selection tables, 4-pole motors

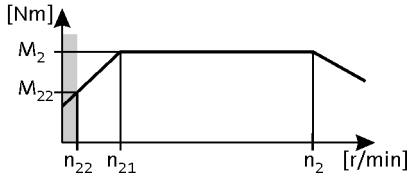

50 Hz: P_N = 7.5 kW
87 Hz: P_N = 13.1 kW

3-stage gearboxes

Mains operation 400 V, 50 Hz			Inverter operation 5 Hz -		- 20 ... 25 Hz		- 50 Hz (1:10)			- 87 Hz (1:17.4)			i	Product		
n_2 [r/min]	M_2 [Nm]	c	n_{22} [r/min]	M_{22} [Nm]	n_{21} [r/min]	M_2 [Nm]	n_2 [r/min]	M_2 [Nm]	c	n_2 [r/min]	M_2 [Nm]	c		g500	m5□□	
5.9	11583	1.2	0.6	6371	3.0	11511	5.9	11583	1.2	10	11511	1.2	247.840	-S14000	40-P132/L4	
5.4	12796	1.1	0.5	7039	2.7	12716	5.4	12796	1.1	9.4	12716	1.1	273.800	-S14000	40-P132/L4	
5.2	13099	1.5	0.5	7205	2.6	13017	5.2	13099	1.5	9.2	13017	1.5	280.270	-S19000	40-P132/L4	
4.8	14252	1.0	0.5	7839	2.4	14162	4.8	14252	1.0	8.4	14162	1.0	304.940	-S14000	40-P132/L4	
4.7	14524	1.3	0.5	7989	2.4	14433	4.7	14524	1.3	8.3	14433	1.3	310.760	-S19000	40-P132/L4	
4.3	16031	0.9	0.4	8818	2.1	15931	4.3	16031	0.9	7.5	15931	0.9	343.010	-S14000	40-P132/L4	
4.2	16234	1.2	0.4	8929	2.1	16132	4.2	16234	1.2	7.4	16132	1.2	347.350	-S19000	40-P132/L4	

Selection tables, 4-pole motors

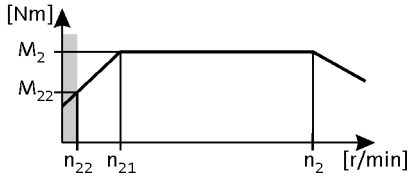

50 Hz: P_N = 11.0 kW
87 Hz: P_N = 19.2 kW

2-stage gearboxes

Mains operation 400 V, 50 Hz			Inverter operation 5 Hz -		- 20 ... 25 Hz		- 50 Hz (1:10)			- 87 Hz (1:17.4)			i	Product		
n_2 [r/min]	M_2 [Nm]	c	n_{22} [r/min]	M_{22} [Nm]	n_{21} [r/min]	M_2 [Nm]	n_2 [r/min]	M_2 [Nm]	c	n_2 [r/min]	M_2 [Nm]	c		g500	m5□□	
322	317	4.2	32	175	131	317	322	317	4.2				4.593	-S2100	50-P160/M4	
299	341	5.4	29	189	121	341	299	341	5.4				4.951	-S3100	50-P160/M4	
245	416	3.6	24	230	100	416	245	416	3.6				6.029	-S2100	50-P160/M4	
229	445	5.5	23	246	93	445	229	445	5.5				6.450	-S4500	50-P160/M4	
227	448	4.7	22	248	92	448	227	448	4.7				6.499	-S3100	50-P160/M4	
215	474	3.1	21	262	87	474	215	474	3.1				6.870	-S2100	50-P160/M4	
210	487	5.2	21	269	85	487	210	487	5.2				7.056	-S4500	50-P160/M4	
200	511	4.4	20	283	81	511	200	511	4.4				7.406	-S3100	50-P160/M4	
179	570	2.6	18	316	73	570	179	570	2.6				8.272	-S2100	50-P160/M4	
166	615	3.7	16	340	67	615	166	615	3.7				8.917	-S3100	50-P160/M4	
156	652	2.9	15	361	64	652	156	652	2.9				9.452	-S2100	50-P160/M4	
141	724	2.6	14	401	57	724	141	724	2.6				10.504	-S2100	50-P160/M4	
135	754	3.0	13	417	55	754	135	754	3.0				10.932	-S3100	50-P160/M4	
133	767	3.9	13	425	54	767	133	767	3.9				11.128	-S3100	50-P160/M4	
126	810	5.5	12	448	51	810	126	810	5.5				11.740	-S4500	50-P160/M4	
119	855	2.4	12	473	48	855	119	855	2.4				12.406	-S2100	50-P160/M4	
118	868	3.4	12	480	48	868	118	868	3.4				12.584	-S3100	50-P160/M4	
115	886	5.1	11	490	47	886	115	886	5.1				12.843	-S4500	50-P160/M4	
113	904	5.0	11	500	46	904	113	904	5.0				13.105	-S4500	50-P160/M4	
107	951	2.2	11	526	44	951	107	951	2.2				13.787	-S2100	50-P160/M4	
105	975	2.1	10	539	42	975	105	975	2.1				14.137	-S2100	50-P160/M4	
103	989	4.6	10	547	42	989	103	989	4.6				14.336	-S4500	50-P160/M4	
101	1007	3.1	9.9	557	41	1007	101	1007	3.1				14.606	-S3100	50-P160/M4	
94	1083	1.9	9.2	599	38	1083	94	1083	1.9				15.711	-S2100	50-P160/M4	
90	1130	4.0	8.9	625	37	1130	90	1130	4.0				16.381	-S4500	50-P160/M4	
90	1139	2.7	8.8	630	36	1139	90	1139	2.7				16.517	-S3100	50-P160/M4	
89	1148	2.7	8.7	635	36	1148	89	1148	2.7				16.644	-S3100	50-P160/M4	
87	1174	1.8	8.5	650	35	1174	87	1174	1.8				17.022	-S2100	50-P160/M4	
81	1261	3.6	7.9	698	33	1261	81	1261	3.6				18.286	-S4500	50-P160/M4	
79	1298	2.4	7.7	718	32	1298	79	1298	2.4				18.822	-S3100	50-P160/M4	
78	1304	1.6	7.7	722	32	1304	78	1304	1.6				18.917	-S2100	50-P160/M4	
75	1362	5.9	7.4	749	38	1362	75	1362	5.9				19.710	-S8000	40-P160/M4	
74	1382	2.2	7.2	765	30	1382	74	1382	2.2				20.041	-S3100	50-P160/M4	
74	1384	3.3	7.2	766	30	1384	74	1384	3.3				20.067	-S4500	50-P160/M4	
71	1439	1.4	6.9	796	29	1439	71	1439	1.4				20.869	-S2100	50-P160/M4	

Selection tables, 4-pole motors

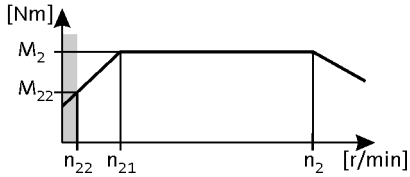

50 Hz: P_N = 11.0 kW
87 Hz: P_N = 19.2 kW

2-stage gearboxes

Mains operation 400 V, 50 Hz			Inverter operation 5 Hz -		- 20 ... 25 Hz		- 50 Hz (1:10)			- 87 Hz (1:17.4)			i	Product		
n_2 [r/min]	M_2 [Nm]	c	n_{22} [r/min]	M_{22} [Nm]	n_{21} [r/min]	M_2 [Nm]	n_2 [r/min]	M_2 [Nm]	c	n_2 [r/min]	M_2 [Nm]	c		g500	m5□□	
66	1535	5.2	6.5	844	33	1535	66	1535	5.2				22.220	-S8000	40-P160/M4	
66	1545	2.9	6.5	855	27	1545	66	1545	2.9				22.400	-S4500	50-P160/M4	
65	1563	2.0	6.4	865	27	1563	65	1563	2.0				22.663	-S3100	50-P160/M4	
64	1599	1.3	6.3	885	26	1599	64	1599	1.3				23.193	-S2100	50-P160/M4	
60	1694	1.8	5.9	938	24	1694	60	1694	1.8				24.570	-S3100	50-P160/M4	
59	1722	4.7	5.8	947	30	1722	59	1722	4.7				24.930	-S8000	40-P160/M4	
56	1823	2.5	5.5	1009	23	1823	56	1823	2.5				26.437	-S4500	50-P160/M4	
53	1916	1.6	5.2	1060	22	1916	53	1916	1.6				27.785	-S3100	50-P160/M4	
53	1930	4.1	5.2	1062	27	1930	53	1930	4.1				27.940	-S8000	40-P160/M4	
50	2035	2.2	4.9	1126	20	2035	50	2035	2.2				29.511	-S4500	50-P160/M4	
47	2149	3.7	4.7	1182	24	2149	47	2149	3.7				31.110	-S8000	40-P160/M4	
46	2240	2.0	4.5	1240	19	2240	46	2240	2.0				32.489	-S4500	50-P160/M4	
45	2281	6.0	4.4	1255	22	2281	45	2281	6.0				33.020	-S14000	40-P160/M4	
42	2413	3.3	4.2	1327	21	2413	42	2413	3.3				34.930	-S8000	40-P160/M4	
41	2501	1.8	4.0	1384	17	2501	41	2501	1.8				36.267	-S4500	50-P160/M4	
40	2552	5.3	3.9	1404	20	2552	40	2552	5.3				36.940	-S14000	40-P160/M4	
38	2663	3.0	3.8	1465	19	2652	38	2663	3.0	67	2652	3.0	38.550	-S8000	40-P160/M4	
36	2837	4.8	3.5	1561	18	2837	36	2837	4.8				41.070	-S14000	40-P160/M4	
34	3032	2.6	3.3	1668	17	3020	34	3032	2.6	59	3020	2.7	43.890	-S8000	40-P160/M4	
33	3104	4.0	3.2	1707	17	3091	33	3104	4.0	58	3091	4.0	44.930	-S14000	40-P160/M4	
30	3349	2.4	3.0	1842	15	3335	30	3349	2.4	53	3335	2.4	48.480	-S8000	40-P160/M4	

3-stage gearboxes

Mains operation 400 V, 50 Hz			Inverter operation 5 Hz -		- 20 ... 25 Hz		- 50 Hz (1:10)			- 87 Hz (1:17.4)			i	Product		
n_2 [r/min]	M_2 [Nm]	c	n_{22} [r/min]	M_{22} [Nm]	n_{21} [r/min]	M_2 [Nm]	n_2 [r/min]	M_2 [Nm]	c	n_2 [r/min]	M_2 [Nm]	c		g500	m5□□	
46	2201	3.4	4.5	1211	23	2201	46	2201	3.4				32.330	-S8000	40-P160/M4	
39	2587	1.6	3.8	1432	16	2587	39	2587	1.6				38.090	-S4500	50-P160/M4	
37	2684	3.0	3.7	1477	19	2674	37	2684	3.0	66	2674	2.5	39.430	-S8000	40-P160/M4	
36	2779	4.9	3.6	1529	18	2768	36	2779	4.9	63	2768	4.1	40.820	-S14000	40-P160/M4	
35	2888	1.5	3.4	1598	14	2888	35	2888	1.5				42.520	-S4500	50-P160/M4	
33	3084	2.6	3.2	1696	16	3072	33	3084	2.6	57	3072	2.2	45.300	-S8000	40-P160/M4	
32	3169	4.3	3.1	1743	16	3156	32	3169	4.3	56	3156	3.6	46.550	-S14000	40-P160/M4	
30	3405	2.4	2.9	1873	15	3391	30	3405	2.4	52	3391	2.2	50.010	-S8000	40-P160/M4	
29	3447	4.0	2.9	1896	15	3433	29	3447	4.0	51	3433	3.8	50.630	-S14000	40-P160/M4	
28	3586	1.3	2.7	1984	11	3586	28	3586	1.3				52.794	-S4500	50-P160/M4	
26	3838	2.1	2.6	2111	13	3822	26	3838	2.1	46	3822	2.0	56.370	-S8000	40-P160/M4	
25	4003	1.1	2.5	2215	10	4003	25	4003	1.1				58.933	-S4500	50-P160/M4	
24	4229	4.5	2.3	2326	12	4211	24	4229	4.5	42	4211	4.3	62.110	-S19000	40-P160/M4	
23	4408	3.1	2.2	2425	11	4390	23	4408	3.1	40	4390	2.9	64.750	-S14000	40-P160/M4	

Selection tables, 4-pole motors

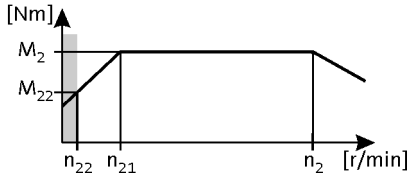

50 Hz: P_N = 11.0 kW
87 Hz: P_N = 19.2 kW

3-stage gearboxes

Mains operation 400 V, 50 Hz			Inverter operation 5 Hz -		- 20 ... 25 Hz		- 50 Hz (1:10)			- 87 Hz (1:17.4)			i	Product		
n_2 [r/min]	M_2 [Nm]	c	n_{22} [r/min]	M_{22} [Nm]	n_{21} [r/min]	M_2 [Nm]	n_2 [r/min]	M_2 [Nm]	c	n_2 [r/min]	M_2 [Nm]	c		g500	m5□□	
23	4413	1.0	2.2	2442	9.2	4413	23	4413	1.0				64.978	-S4500	50-P160/M4	
22	4681	1.7	2.1	2575	11	4662	22	4681	1.7	38	4662	1.6	68.760	-S8000	40-P160/M4	
20	4926	0.9	2.0	2726	8.3	4926	20	4926	0.9				72.533	-S4500	50-P160/M4	
20	4943	0.9	2.0	2735	8.2	4943	20	4943	0.9				72.775	-S4500	50-P160/M4	
20	5028	2.7	2.0	2766	10	5007	20	5028	2.7	35	5007	2.7	73.850	-S14000	40-P160/M4	
19	5305	3.6	1.9	2918	9.5	5283	19	5305	3.6	33	5283	3.6	77.920	-S19000	40-P160/M4	
19	5377	1.5	1.8	2958	9.4	5355	19	5377	1.5	33	5355	1.5	78.980	-S8000	40-P160/M4	
18	5518	0.8	1.8	3053	7.4	5518	18	5518	0.8				81.237	-S4500	50-P160/M4	
17	5937	1.4	1.7	3265	8.5	5913	17	5937	1.4	30	5913	1.4	87.200	-S8000	40-P160/M4	
17	5967	3.2	1.7	3282	8.4	5943	17	5967	3.2	30	5943	3.2	87.650	-S19000	40-P160/M4	
16	6129	2.2	1.6	3371	8.2	6105	16	6129	2.2	29	6105	2.2	90.030	-S14000	40-P160/M4	
15	6752	1.2	1.5	3714	7.5	6725	15	6752	1.2	26	6725	1.2	99.180	-S8000	40-P160/M4	
14	6957	2.0	1.4	3826	7.2	6928	14	6957	2.0	25	6928	2.0	102.180	-S14000	40-P160/M4	
14	7181	2.7	1.4	3950	7.0	7152	14	7181	2.7	25	7152	2.7	105.480	-S19000	40-P160/M4	
13	7577	1.8	1.3	4168	6.6	7547	13	7577	1.8	23	7547	1.8	111.300	-S14000	40-P160/M4	
13	7650	1.1	1.3	4208	6.6	7619	13	7650	1.1	23	7619	1.1	112.360	-S8000	40-P160/M4	
13	7984	2.4	1.2	4392	6.3	7952	13	7984	2.4	22	7952	2.4	117.270	-S19000	40-P160/M4	
12	8544	1.6	1.2	4699	5.9	8509	12	8544	1.6	21	8509	1.6	125.490	-S14000	40-P160/M4	
12	8628	0.9	1.1	4746	5.8	8593	12	8628	0.9	20	8593	0.9	126.730	-S8000	40-P160/M4	
11	8813	2.2	1.1	4848	5.7	8778	11	8813	2.2	20	8778	2.2	129.450	-S19000	40-P160/M4	
11	9584	1.4	1.0	5272	5.3	9545	11	9584	1.4	18	9545	1.4	140.770	-S14000	40-P160/M4	
10	9629	0.8	1.0	5296	5.2	9590	10	9629	0.8	18	9590	0.8	141.430	-S8000	40-P160/M4	
10	9891	1.9	1.0	5440	5.1	9851	10	9891	1.9	18	9851	1.9	145.280	-S19000	40-P160/M4	
9.3	10741	1.3	0.9	5908	4.7	10697	9.3	10741	1.3	16	10697	1.3	157.760	-S14000	40-P160/M4	
9.0	11207	1.7	0.9	6164	4.5	11162	9.0	11207	1.7	16	11162	1.7	164.610	-S19000	40-P160/M4	
8.4	11961	1.1	0.8	6579	4.2	11913	8.4	11961	1.1	15	11913	1.1	175.690	-S14000	40-P160/M4	
8.1	12393	1.5	0.8	6817	4.1	12343	8.1	12393	1.5	14	12343	1.5	182.030	-S19000	40-P160/M4	
7.5	13430	1.0	0.7	7387	3.8	13376	7.5	13430	1.0	13	13376	1.0	197.270	-S14000	40-P160/M4	
7.2	13868	1.4	0.7	7628	3.6	13811	7.2	13868	1.4	13	13811	1.4	203.690	-S19000	40-P160/M4	
6.8	14821	0.9	0.7	8152	3.4	14761	6.8	14821	0.9	12	14761	0.9	217.700	-S14000	40-P160/M4	
6.5	15415	1.2	0.6	8479	3.3	15353	6.5	15415	1.2	11	15353	1.2	226.420	-S19000	40-P160/M4	
6.0	16865	1.1	0.6	9276	3.0	16796	6.0	16865	1.1	10	16796	1.1	247.710	-S19000	40-P160/M4	
6.0	16873	0.8	0.6	9281	3.0	16805	6.0	16873	0.8	10	16805	0.8	247.840	-S14000	40-P160/M4	
5.3	19081	1.0	0.5	10496	2.6	19004	5.3	19081	1.0	9.2	19004	1.0	280.270	-S19000	40-P160/M4	
4.7	21157	0.9	0.5	11637	2.4	21071	4.7	21157	0.9	8.3	21071	0.9	310.760	-S19000	40-P160/M4	

Selection tables, 4-pole motors

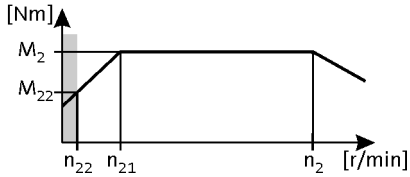

50 Hz: P_N = 15.0 kW
87 Hz: P_N = 26.3 kW

2-stage gearboxes

Mains operation 400 V, 50 Hz			Inverter operation 5 Hz -		- 20 ... 25 Hz		- 50 Hz (1:10)			- 87 Hz (1:17.4)			i	Product		
n_2 [r/min]	M_2 [Nm]	c	n_{22} [r/min]	M_{22} [Nm]	n_{21} [r/min]	M_2 [Nm]	n_2 [r/min]	M_2 [Nm]	c	n_2 [r/min]	M_2 [Nm]	c		g500	m5□□	
320	434	3.1	32	239	131	434	320	434	3.1				4.593	-S2100	50-P160/L4	
299	465	4.6	30	255	122	465	299	465	4.6				4.914	-S4500	50-P160/L4	
297	468	3.9	29	257	121	468	297	468	3.9				4.951	-S3100	50-P160/L4	
244	570	2.6	24	313	100	570	244	570	2.6				6.029	-S2100	50-P160/L4	
228	610	4.0	23	335	93	610	228	610	4.0				6.450	-S4500	50-P160/L4	
226	614	3.4	22	338	92	614	226	614	3.4				6.499	-S3100	50-P160/L4	
214	650	2.3	21	357	87	650	214	650	2.3				6.870	-S2100	50-P160/L4	
208	667	3.8	21	367	85	667	208	667	3.8				7.056	-S4500	50-P160/L4	
199	700	3.2	20	385	81	700	199	700	3.2				7.406	-S3100	50-P160/L4	
178	782	1.9	18	430	73	782	178	782	1.9				8.272	-S2100	50-P160/L4	
165	843	2.7	16	464	67	843	165	843	2.7				8.917	-S3100	50-P160/L4	
164	846	4.6	16	465	67	846	164	846	4.6				8.944	-S4500	50-P160/L4	
156	894	2.1	15	491	64	894	156	894	2.1				9.452	-S2100	50-P160/L4	
147	944	4.4	15	519	60	944	147	944	4.4				9.984	-S4500	50-P160/L4	
140	993	1.9	14	546	57	993	140	993	1.9				10.504	-S2100	50-P160/L4	
135	1034	2.2	13	568	55	1034	135	1034	2.2				10.932	-S3100	50-P160/L4	
132	1052	2.9	13	578	54	1052	132	1052	2.9				11.128	-S3100	50-P160/L4	
125	1110	4.0	12	610	51	1110	125	1110	4.0				11.740	-S4500	50-P160/L4	
119	1173	1.7	12	645	48	1173	119	1173	1.7				12.406	-S2100	50-P160/L4	
117	1190	2.5	12	654	48	1190	117	1190	2.5				12.584	-S3100	50-P160/L4	
115	1214	3.7	11	668	47	1214	115	1214	3.7				12.843	-S4500	50-P160/L4	
112	1239	3.6	11	681	46	1239	112	1239	3.6				13.105	-S4500	50-P160/L4	
107	1303	1.6	11	717	44	1303	107	1303	1.6				13.787	-S2100	50-P160/L4	
104	1337	1.5	10	735	42	1337	104	1337	1.5				14.137	-S2100	50-P160/L4	
103	1355	3.3	10	745	42	1355	103	1355	3.3				14.336	-S4500	50-P160/L4	
101	1381	2.2	9.9	759	41	1381	101	1381	2.2				14.606	-S3100	50-P160/L4	
94	1485	1.4	9.2	817	38	1485	94	1485	1.4				15.711	-S2100	50-P160/L4	
93	1502	5.3	9.1	826	46	1502	93	1502	5.3				15.940	-S8000	40-P160/L4	
90	1549	2.9	8.9	851	37	1549	90	1549	2.9				16.381	-S4500	50-P160/L4	
89	1562	2.0	8.8	859	36	1562	89	1562	2.0				16.517	-S3100	50-P160/L4	
88	1574	2.0	8.7	865	36	1574	88	1574	2.0				16.644	-S3100	50-P160/L4	
86	1609	1.3	8.5	885	35	1609	86	1609	1.3				17.022	-S2100	50-P160/L4	
82	1705	4.7	8.0	938	41	1705	82	1705	4.7				18.100	-S8000	40-P160/L4	
80	1729	2.6	7.9	950	33	1729	80	1729	2.6				18.286	-S4500	50-P160/L4	
78	1779	1.7	7.7	978	32	1779	78	1779	1.7				18.822	-S3100	50-P160/L4	

Selection tables, 4-pole motors

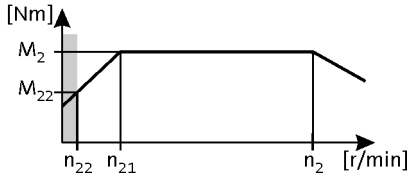

50 Hz: P_N = 15.0 kW
87 Hz: P_N = 26.3 kW

2-stage gearboxes

Mains operation 400 V, 50 Hz			Inverter operation 5 Hz -		- 20 ... 25 Hz		- 50 Hz (1:10)			- 87 Hz (1:17.4)			i	Product		
n_2 [r/min]	M_2 [Nm]	c	n_{22} [r/min]	M_{22} [Nm]	n_{21} [r/min]	M_2 [Nm]	n_2 [r/min]	M_2 [Nm]	c	n_2 [r/min]	M_2 [Nm]	c		g500	m5□□	
78	1788	1.2	7.7	983	32	1788	78	1788	1.2				18.917	-S2100	50-P160/L4	
75	1857	4.3	7.4	1021	38	1857	75	1857	4.3				19.710	-S8000	40-P160/L4	
73	1895	1.6	7.2	1042	30	1895	73	1895	1.6				20.041	-S3100	50-P160/L4	
73	1897	2.4	7.2	1043	30	1897	73	1897	2.4				20.067	-S4500	50-P160/L4	
70	1973	1.0	6.9	1085	29	1973	70	1973	1.0				20.869	-S2100	50-P160/L4	
66	2093	3.8	6.5	1151	33	2093	66	2093	3.8				22.220	-S8000	40-P160/L4	
66	2118	2.1	6.5	1164	27	2118	66	2118	2.1				22.400	-S4500	50-P160/L4	
65	2143	1.5	6.4	1178	27	2143	65	2143	1.5				22.663	-S3100	50-P160/L4	
63	2193	0.9	6.3	1205	26	2193	63	2193	0.9				23.193	-S2100	50-P160/L4	
60	2323	1.3	5.9	1277	24	2323	60	2323	1.3				24.570	-S3100	50-P160/L4	
59	2348	3.4	5.8	1291	30	2348	59	2348	3.4				24.930	-S8000	40-P160/L4	
56	2482	5.5	5.5	1365	28	2482	56	2482	5.5				26.350	-S14000	40-P160/L4	
56	2499	1.8	5.5	1374	23	2499	56	2499	1.8				26.437	-S4500	50-P160/L4	
53	2627	1.2	5.2	1444	22	2627	53	2627	1.2				27.785	-S3100	50-P160/L4	
53	2632	3.0	5.2	1447	27	2632	53	2632	3.0				27.940	-S8000	40-P160/L4	
50	2790	1.6	4.9	1534	20	2790	50	2790	1.6				29.511	-S4500	50-P160/L4	
49	2813	4.8	4.9	1547	25	2813	49	2813	4.8				29.860	-S14000	40-P160/L4	
47	2931	2.7	4.7	1612	24	2931	47	2931	2.7				31.110	-S8000	40-P160/L4	
45	3072	1.5	4.5	1689	19	3072	45	3072	1.5				32.489	-S4500	50-P160/L4	
45	3110	4.4	4.4	1711	22	3110	45	3110	4.4				33.020	-S14000	40-P160/L4	
43	3206	5.9	4.3	1763	22	3206	43	3206	5.9				34.030	-S19000	40-P160/L4	
42	3290	2.4	4.2	1810	21	3290	42	3290	2.4				34.930	-S8000	40-P160/L4	
41	3429	1.3	4.0	1885	17	3429	41	3429	1.3				36.267	-S4500	50-P160/L4	
40	3480	3.9	3.9	1914	20	3480	40	3480	3.9				36.940	-S14000	40-P160/L4	
39	3573	5.3	3.8	1965	20	3573	39	3573	5.3				37.930	-S19000	40-P160/L4	
38	3631	2.2	3.8	1997	19	3631	38	3631	2.2				38.550	-S8000	40-P160/L4	
36	3869	3.5	3.5	2128	18	3869	36	3869	3.5				41.070	-S14000	40-P160/L4	
34	4134	1.9	3.3	2274	17	4134	34	4134	1.9	59	4136	1.9	43.890	-S8000	40-P160/L4	
33	4232	2.9	3.2	2328	17	4232	33	4232	2.9	58	4234	2.9	44.930	-S14000	40-P160/L4	
30	4567	1.8	3.0	2511	15	4567	30	4567	1.8	53	4569	1.8	48.480	-S8000	40-P160/L4	

3-stage gearboxes

Mains operation 400 V, 50 Hz			Inverter operation 5 Hz -		- 20 ... 25 Hz		- 50 Hz (1:10)			- 87 Hz (1:17.4)			i	Product		
n_2 [r/min]	M_2 [Nm]	c	n_{22} [r/min]	M_{22} [Nm]	n_{21} [r/min]	M_2 [Nm]	n_2 [r/min]	M_2 [Nm]	c	n_2 [r/min]	M_2 [Nm]	c		g500	m5□□	
46	2963	4.6	4.5	1630	23	2963	46	2963	4.6				31.920	-S14000	40-P160/L4	
46	3001	2.5	4.5	1651	23	3001	46	3001	2.5				32.330	-S8000	40-P160/L4	
39	3547	1.2	3.8	1950	16	3547	39	3547	1.2				38.090	-S4500	50-P160/L4	
37	3661	2.2	3.7	2013	19	3661	37	3661	2.2				39.430	-S8000	40-P160/L4	
36	3770	5.0	3.6	2073	18	3770	36	3770	5.0				40.610	-S19000	40-P160/L4	

Selection tables, 4-pole motors

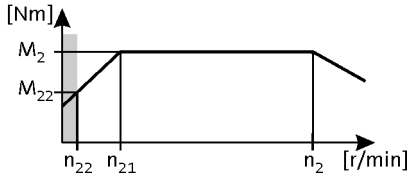

50 Hz: P_N = 15.0 kW
87 Hz: P_N = 26.3 kW

3-stage gearboxes

Mains operation 400 V, 50 Hz			Inverter operation 5 Hz -		- 20 ... 25 Hz		- 50 Hz (1:10)			- 87 Hz (1:17.4)			i	Product		
n_2 [r/min]	M_2 [Nm]	c	n_{22} [r/min]	M_{22} [Nm]	n_{21} [r/min]	M_2 [Nm]	n_2 [r/min]	M_2 [Nm]	c	n_2 [r/min]	M_2 [Nm]	c		g500	m5□□	
36	3790	3.6	3.6	2084	18	3790	36	3790	3.6				40.820	-S14000	40-P160/L4	
35	3960	1.1	3.4	2177	14	3960	35	3960	1.1				42.520	-S4500	50-P160/L4	
33	4206	1.9	3.2	2313	16	4206	33	4206	1.9				45.300	-S8000	40-P160/L4	
32	4322	3.2	3.1	2377	16	4322	32	4322	3.2	56	4324	2.6	46.550	-S14000	40-P160/L4	
30	4643	1.7	2.9	2553	15	4643	30	4643	1.7	52	4645	1.6	50.010	-S8000	40-P160/L4	
29	4700	2.9	2.9	2585	15	4700	29	4700	2.9	51	4703	2.7	50.630	-S14000	40-P160/L4	
28	4916	0.9	2.7	2703	11	4916	28	4916	0.9				52.794	-S4500	50-P160/L4	
26	5233	1.5	2.6	2878	13	5233	26	5233	1.5	46	5236	1.5	56.370	-S8000	40-P160/L4	
25	5488	0.8	2.5	3017	10	5488	25	5488	0.8				58.933	-S4500	50-P160/L4	
24	5766	3.3	2.3	3171	12	5766	24	5766	3.3	42	5769	3.1	62.110	-S19000	40-P160/L4	
23	6011	2.3	2.2	3306	11	6011	23	6011	2.3	40	6014	2.1	64.750	-S14000	40-P160/L4	
22	6384	1.3	2.1	3511	11	6384	22	6384	1.3	38	6386	1.2	68.760	-S8000	40-P160/L4	
20	6856	2.0	2.0	3770	10	6856	20	6856	2.0	35	6859	2.0	73.850	-S14000	40-P160/L4	
19	7234	2.6	1.9	3978	9.5	7234	19	7234	2.6	33	7237	2.6	77.920	-S19000	40-P160/L4	
19	7332	1.1	1.8	4032	9.4	7332	19	7332	1.1	33	7336	1.1	78.980	-S8000	40-P160/L4	
17	8096	1.0	1.7	4452	8.5	8096	17	8096	1.0	30	8099	1.0	87.200	-S8000	40-P160/L4	
17	8137	2.3	1.7	4475	8.4	8137	17	8137	2.3	30	8141	2.3	87.650	-S19000	40-P160/L4	
16	8358	1.6	1.6	4597	8.2	8358	16	8358	1.6	29	8362	1.6	90.030	-S14000	40-P160/L4	
15	9208	0.9	1.5	5064	7.5	9208	15	9208	0.9	26	9212	0.9	99.180	-S8000	40-P160/L4	
14	9486	1.4	1.4	5217	7.2	9486	14	9486	1.4	25	9491	1.4	102.180	-S14000	40-P160/L4	
14	9793	1.9	1.4	5385	7.0	9793	14	9793	1.9	25	9797	1.9	105.480	-S19000	40-P160/L4	
13	10333	1.3	1.3	5682	6.6	10333	13	10333	1.3	23	10338	1.3	111.300	-S14000	40-P160/L4	
13	10887	1.8	1.2	5987	6.3	10887	13	10887	1.8	22	10892	1.7	117.270	-S19000	40-P160/L4	
12	11650	1.2	1.2	6407	5.9	11650	12	11650	1.2	21	11656	1.2	125.490	-S14000	40-P160/L4	
11	12018	1.6	1.1	6609	5.7	12018	11	12018	1.6	20	12023	1.6	129.450	-S19000	40-P160/L4	
11	13069	1.0	1.0	7187	5.3	13069	11	13069	1.0	18	13075	1.0	140.770	-S14000	40-P160/L4	
10	13488	1.4	1.0	7417	5.1	13488	10	13488	1.4	18	13494	1.4	145.280	-S19000	40-P160/L4	
9.3	14646	0.9	0.9	8055	4.7	14646	9.3	14646	0.9	16	14653	0.9	157.760	-S14000	40-P160/L4	
9.0	15282	1.2	0.9	8404	4.5	15282	9.0	15282	1.2	16	15289	1.2	164.610	-S19000	40-P160/L4	
8.4	16311	0.8	0.8	8970	4.2	16311	8.4	16311	0.8	15	16318	0.8	175.690	-S14000	40-P160/L4	
8.1	16899	1.1	0.8	9294	4.1	16899	8.1	16899	1.1	14	16907	1.1	182.030	-S19000	40-P160/L4	
7.2	18910	1.0	0.7	10399	3.6	18910	7.2	18910	1.0	13	18919	1.0	203.690	-S19000	40-P160/L4	
6.5	21021	0.9	0.6	11560	3.3	21021	6.5	21021	0.9	11	21030	0.9	226.420	-S19000	40-P160/L4	
6.0	22997	0.8	0.6	12647	3.0	22997	6.0	22997	0.8	10	23007	0.8	247.710	-S19000	40-P160/L4	

Selection tables, 4-pole motors

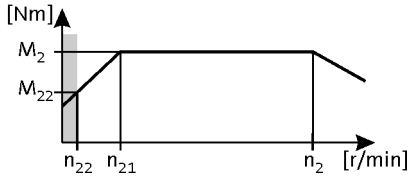

50 Hz: P_N = 18.5 kW
87 Hz: P_N = 32.2 kW

2-stage gearboxes

Mains operation 400 V, 50 Hz			Inverter operation 5 Hz -		- 20 ... 25 Hz		- 50 Hz (1:10)			- 87 Hz (1:17.4)			i	Product		
n_2 [r/min]	M_2 [Nm]	c	n_{22} [r/min]	M_{22} [Nm]	n_{21} [r/min]	M_2 [Nm]	n_2 [r/min]	M_2 [Nm]	c	n_2 [r/min]	M_2 [Nm]	c		g500	m5□□	
323	531	2.5	32	294	131	531	323	531	2.5				4.593	-S2100	50-P180/M4	
302	568	3.7	30	314	122	568	302	568	3.7				4.914	-S4500	50-P180/M4	
300	572	3.2	29	317	121	572	300	572	3.2				4.951	-S3100	50-P180/M4	
246	697	2.1	24	385	100	697	246	697	2.1				6.029	-S2100	50-P180/M4	
230	745	3.3	23	412	93	745	230	745	3.3				6.450	-S4500	50-P180/M4	
228	751	2.8	22	416	92	751	228	751	2.8				6.499	-S3100	50-P180/M4	
216	794	1.9	21	439	87	794	216	794	1.9				6.870	-S2100	50-P180/M4	
210	816	3.1	21	451	85	816	210	816	3.1				7.056	-S4500	50-P180/M4	
200	856	2.6	20	473	81	856	200	856	2.6				7.406	-S3100	50-P180/M4	
179	956	1.6	18	529	73	956	179	956	1.6				8.272	-S2100	50-P180/M4	
166	1031	2.2	16	570	67	1031	166	1031	2.2				8.917	-S3100	50-P180/M4	
166	1034	3.7	16	572	67	1034	166	1034	3.7				8.944	-S4500	50-P180/M4	
157	1092	1.7	15	604	64	1092	157	1092	1.7				9.452	-S2100	50-P180/M4	
149	1154	3.6	15	638	60	1154	149	1154	3.6				9.984	-S4500	50-P180/M4	
136	1264	1.8	13	699	55	1264	136	1264	1.8				10.932	-S3100	50-P180/M4	
133	1286	2.4	13	711	54	1286	133	1286	2.4				11.128	-S3100	50-P180/M4	
126	1357	3.3	12	751	51	1357	126	1357	3.3				11.740	-S4500	50-P180/M4	
120	1434	1.4	12	793	48	1434	120	1434	1.4				12.406	-S2100	50-P180/M4	
118	1454	2.0	12	805	48	1454	118	1454	2.0				12.584	-S3100	50-P180/M4	
116	1484	3.0	11	821	47	1484	116	1484	3.0				12.843	-S4500	50-P180/M4	
112	1525	5.0	11	839	56	1525	112	1525	5.0				13.080	-S8000	40-P180/M4	
113	1515	3.0	11	838	46	1515	113	1515	3.0				13.105	-S4500	50-P180/M4	
105	1634	1.3	10	904	42	1634	105	1634	1.3				14.137	-S2100	50-P180/M4	
103	1657	2.7	10	917	42	1657	103	1657	2.7				14.336	-S4500	50-P180/M4	
102	1688	1.8	9.9	934	41	1688	102	1688	1.8				14.606	-S3100	50-P180/M4	
94	1816	1.1	9.2	1004	38	1816	94	1816	1.1				15.711	-S2100	50-P180/M4	
92	1858	4.3	9.1	1022	46	1858	92	1858	4.3				15.940	-S8000	40-P180/M4	
91	1893	2.4	8.9	1047	37	1893	91	1893	2.4				16.381	-S4500	50-P180/M4	
90	1909	1.6	8.8	1056	36	1909	90	1909	1.6				16.517	-S3100	50-P180/M4	
89	1924	1.6	8.7	1064	36	1924	89	1924	1.6				16.644	-S3100	50-P180/M4	
87	1967	1.0	8.5	1088	35	1967	87	1967	1.0				17.022	-S2100	50-P180/M4	
81	2110	3.8	8.0	1161	41	2110	81	2110	3.8				18.100	-S8000	40-P180/M4	
81	2113	2.1	7.9	1169	33	2113	81	2113	2.1				18.286	-S4500	50-P180/M4	
79	2175	1.4	7.7	1203	32	2175	79	2175	1.4				18.822	-S3100	50-P180/M4	
78	2186	0.9	7.7	1209	32	2186	78	2186	0.9				18.917	-S2100	50-P180/M4	

Selection tables, 4-pole motors

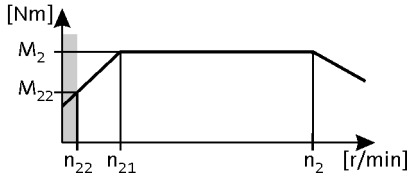

50 Hz: P_N = 18.5 kW
87 Hz: P_N = 32.2 kW

2-stage gearboxes

Mains operation 400 V, 50 Hz			Inverter operation 5 Hz -		- 20 ... 25 Hz		- 50 Hz (1:10)			- 87 Hz (1:17.4)			i	Product		
n_2 [r/min]	M_2 [Nm]	c	n_{22} [r/min]	M_{22} [Nm]	n_{21} [r/min]	M_2 [Nm]	n_2 [r/min]	M_2 [Nm]	c	n_2 [r/min]	M_2 [Nm]	c		g500	m5□□	
75	2298	3.5	7.4	1264	37	2298	75	2298	3.5				19.710	-S8000	40-P180/M4	
74	2316	1.3	7.2	1281	30	2316	74	2316	1.3				20.041	-S3100	50-P180/M4	
74	2319	1.9	7.2	1283	30	2319	74	2319	1.9				20.067	-S4500	50-P180/M4	
71	2412	0.9	6.9	1334	29	2412	71	2412	0.9				20.869	-S2100	50-P180/M4	
69	2480	5.5	6.8	1364	35	2480	69	2480	5.5				21.270	-S14000	40-P180/M4	
66	2590	3.1	6.5	1425	33	2590	66	2590	3.1				22.220	-S8000	40-P180/M4	
66	2589	1.7	6.5	1432	27	2589	66	2589	1.7				22.400	-S4500	50-P180/M4	
65	2619	1.2	6.4	1449	27	2619	65	2619	1.2				22.663	-S3100	50-P180/M4	
63	2737	5.0	6.2	1506	31	2737	63	2737	5.0				23.480	-S14000	40-P180/M4	
60	2840	1.1	5.9	1571	24	2840	60	2840	1.1				24.570	-S3100	50-P180/M4	
59	2906	2.8	5.8	1599	30	2906	59	2906	2.8				24.930	-S8000	40-P180/M4	
56	3072	4.4	5.5	1690	28	3072	56	3072	4.4				26.350	-S14000	40-P180/M4	
56	3056	1.5	5.5	1690	23	3056	56	3056	1.5				26.437	-S4500	50-P180/M4	
54	3167	6.0	5.3	1742	27	3167	54	3167	6.0				27.170	-S19000	40-P180/M4	
53	3211	1.0	5.2	1776	22	3211	53	3211	1.0				27.785	-S3100	50-P180/M4	
53	3257	2.5	5.2	1792	26	3257	53	3257	2.5				27.940	-S8000	40-P180/M4	
50	3411	1.3	4.9	1887	20	3411	50	3411	1.3				29.511	-S4500	50-P180/M4	
49	3481	3.9	4.9	1915	25	3481	49	3481	3.9				29.860	-S14000	40-P180/M4	
48	3545	5.4	4.8	1950	24	3545	48	3545	5.4				30.410	-S19000	40-P180/M4	
47	3627	2.2	4.7	1995	24	3627	47	3627	2.2				31.110	-S8000	40-P180/M4	
46	3755	1.2	4.5	2077	19	3755	46	3755	1.2				32.489	-S4500	50-P180/M4	
45	3849	3.5	4.4	2118	22	3849	45	3849	3.5				33.020	-S14000	40-P180/M4	
43	3967	4.8	4.3	2182	22	3967	43	3967	4.8				34.030	-S19000	40-P180/M4	
42	4072	2.0	4.2	2240	21	4072	42	4072	2.0				34.930	-S8000	40-P180/M4	
41	4192	1.1	4.0	2319	17	4192	41	4192	1.1				36.267	-S4500	50-P180/M4	
40	4306	3.2	3.9	2369	20	4306	40	4306	3.2				36.940	-S14000	40-P180/M4	
39	4422	4.3	3.8	2432	19	4422	39	4422	4.3				37.930	-S19000	40-P180/M4	
36	4788	2.8	3.5	2634	18	4788	36	4788	2.8				41.070	-S14000	40-P180/M4	

3-stage gearboxes

Mains operation 400 V, 50 Hz			Inverter operation 5 Hz -		- 20 ... 25 Hz		- 50 Hz (1:10)			- 87 Hz (1:17.4)			i	Product		
n_2 [r/min]	M_2 [Nm]	c	n_{22} [r/min]	M_{22} [Nm]	n_{21} [r/min]	M_2 [Nm]	n_2 [r/min]	M_2 [Nm]	c	n_2 [r/min]	M_2 [Nm]	c		g500	m5□□	
46	3667	3.7	4.5	2017	23	3667	46	3667	3.7				31.920	-S14000	40-P180/M4	
46	3713	5.1	4.5	2043	23	3713	46	3713	5.1				32.320	-S19000	40-P180/M4	
46	3714	2.0	4.5	2043	23	3714	46	3714	2.0				32.330	-S8000	40-P180/M4	
39	4336	1.0	3.8	2399	16	4336	39	4336	1.0				38.090	-S4500	50-P180/M4	
37	4530	1.8	3.7	2492	19	4530	37	4530	1.8				39.430	-S8000	40-P180/M4	
36	4666	4.1	3.6	2567	18	4666	36	4666	4.1				40.610	-S19000	40-P180/M4	
36	4690	2.9	3.6	2580	18	4690	36	4690	2.9				40.820	-S14000	40-P180/M4	

Selection tables, 4-pole motors

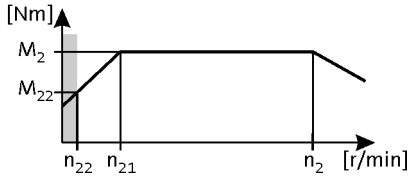

50 Hz: P_N = 18.5 kW
87 Hz: P_N = 32.2 kW

3-stage gearboxes

Mains operation 400 V, 50 Hz			Inverter operation 5 Hz -		- 20 ... 25 Hz		- 50 Hz (1:10)			- 87 Hz (1:17.4)			i	Product		
n_2 [r/min]	M_2 [Nm]	c	n_{22} [r/min]	M_{22} [Nm]	n_{21} [r/min]	M_2 [Nm]	n_2 [r/min]	M_2 [Nm]	c	n_2 [r/min]	M_2 [Nm]	c		g500	m5□□	
33	5205	1.5	3.2	2863	16	5205	33	5205	1.5				45.300	-S8000	40-P180/M4	
32	5348	2.5	3.1	2942	16	5348	32	5348	2.5				46.550	-S14000	40-P180/M4	
30	5679	3.4	2.9	3124	15	5679	30	5679	3.4				49.430	-S19000	40-P180/M4	
29	5746	1.4	2.9	3161	15	5698	29	5746	1.4	52	5698	1.3	50.010	-S8000	40-P180/M4	
29	5817	2.3	2.9	3200	15	5817	29	5817	2.3				50.630	-S14000	40-P180/M4	
26	6476	1.2	2.6	3563	13	6423	26	6476	1.2	46	6423	1.2	56.370	-S8000	40-P180/M4	
24	7136	2.7	2.3	3925	12	7077	24	7136	2.7	42	7077	2.6	62.110	-S19000	40-P180/M4	
23	7439	1.8	2.2	4092	11	7377	23	7439	1.8	40	7377	1.8	64.750	-S14000	40-P180/M4	
21	7900	1.0	2.1	4346	11	7834	21	7900	1.0	38	7834	1.0	68.760	-S8000	40-P180/M4	
20	8485	1.6	2.0	4667	10	8414	20	8485	1.6	35	8414	1.6	73.850	-S14000	40-P180/M4	
19	8952	2.1	1.9	4925	9.4	8878	19	8952	2.1	33	8878	2.1	77.920	-S19000	40-P180/M4	
19	9074	0.9	1.8	4992	9.3	8999	19	9074	0.9	33	8999	0.9	78.980	-S8000	40-P180/M4	
17	10070	1.9	1.7	5540	8.4	10070	17	10070	1.9	29	9987	1.9	87.650	-S19000	40-P180/M4	
16	10344	1.3	1.6	5690	8.2	10258	16	10344	1.3	29	10258	1.3	90.030	-S14000	40-P180/M4	
14	11739	1.2	1.4	6458	7.2	11642	14	11739	1.2	25	11642	1.2	102.180	-S14000	40-P180/M4	
14	12119	1.6	1.4	6667	7.0	12018	14	12119	1.6	25	12018	1.6	105.480	-S19000	40-P180/M4	
13	12787	1.1	1.3	7034	6.6	12681	13	12787	1.1	23	12681	1.1	111.300	-S14000	40-P180/M4	
13	13473	1.4	1.2	7412	6.3	13361	13	13473	1.4	22	13361	1.4	117.270	-S19000	40-P180/M4	
12	14418	0.9	1.2	7931	5.9	14298	12	14418	0.9	21	14298	1.0	125.490	-S14000	40-P180/M4	
11	14873	1.3	1.1	8181	5.7	14749	11	14873	1.3	20	14749	1.3	129.450	-S19000	40-P180/M4	
10	16173	0.8	1.0	8897	5.2	16039	10	16173	0.8	18	16039	0.9	140.770	-S14000	40-P180/M4	
10	16691	1.1	1.0	9182	5.1	16553	10	16691	1.1	18	16553	1.2	145.280	-S19000	40-P180/M4	
8.9	18912	1.0	0.9	10404	4.5	18755	8.9	18912	1.0	16	18755	1.0	164.610	-S19000	40-P180/M4	
8.1	20913	0.9	0.8	11505	4.0	20740	8.1	20913	0.9	14	20740	0.9	182.030	-S19000	40-P180/M4	
7.2	23402	0.8	0.7	12873	3.6	23208	7.2	23402	0.8	13	23208	0.8	203.690	-S19000	40-P180/M4	

Selection tables, 4-pole motors

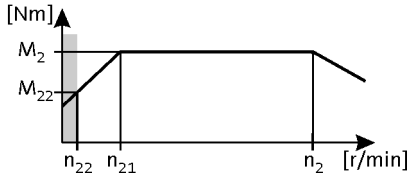

50 Hz: P_N = 22.0 kW
87 Hz: P_N = 38.5 kW

2-stage gearboxes

Mains operation 400 V, 50 Hz			Inverter operation 5 Hz -		- 20 ... 25 Hz		- 50 Hz (1:10)			- 87 Hz (1:17.4)			i	Product		
n_2 [r/min]	M_2 [Nm]	c	n_{22} [r/min]	M_{22} [Nm]	n_{21} [r/min]	M_2 [Nm]	n_2 [r/min]	M_2 [Nm]	c	n_2 [r/min]	M_2 [Nm]	c		g500	m5□□	
322	633	2.1	32	350	131	633	322	633	2.1				4.593	-S2100	50-P180/L4	
301	677	3.1	30	375	122	677	301	677	3.1				4.914	-S4500	50-P180/L4	
299	682	2.7	29	378	121	682	299	682	2.7				4.951	-S3100	50-P180/L4	
246	830	1.8	24	460	100	830	246	830	1.8				6.029	-S2100	50-P180/L4	
230	888	2.8	23	492	93	888	230	888	2.8				6.450	-S4500	50-P180/L4	
228	895	2.4	22	496	92	895	228	895	2.4				6.499	-S3100	50-P180/L4	
215	946	1.6	21	524	87	946	215	946	1.6				6.870	-S2100	50-P180/L4	
210	972	2.6	21	538	85	972	210	972	2.6				7.056	-S4500	50-P180/L4	
200	1020	2.2	20	565	81	1020	200	1020	2.2				7.406	-S3100	50-P180/L4	
182	1121	5.1	18	617	91	1121	182	1121	5.1				8.090	-S8000	40-P180/L4	
179	1139	1.3	18	631	73	1139	179	1139	1.3				8.272	-S2100	50-P180/L4	
166	1228	1.8	16	680	67	1228	166	1228	1.8				8.917	-S3100	50-P180/L4	
166	1232	3.1	16	682	67	1232	166	1232	3.1				8.944	-S4500	50-P180/L4	
148	1375	3.0	15	761	60	1375	148	1375	3.0				9.984	-S4500	50-P180/L4	
135	1506	1.5	13	834	55	1506	135	1506	1.5				10.932	-S3100	50-P180/L4	
133	1533	2.0	13	849	54	1533	133	1533	2.0				11.128	-S3100	50-P180/L4	
126	1617	2.8	12	895	51	1617	126	1617	2.8				11.740	-S4500	50-P180/L4	
118	1733	1.7	12	960	48	1733	118	1733	1.7				12.584	-S3100	50-P180/L4	
115	1769	2.5	11	979	47	1769	115	1769	2.5				12.843	-S4500	50-P180/L4	
113	1805	2.5	11	999	46	1805	113	1805	2.5				13.105	-S4500	50-P180/L4	
103	1974	2.3	10	1093	42	1974	103	1974	2.3				14.336	-S4500	50-P180/L4	
101	2012	1.5	9.9	1114	41	2012	101	2012	1.5				14.606	-S3100	50-P180/L4	
90	2256	2.0	8.9	1249	37	2256	90	2256	2.0				16.381	-S4500	50-P180/L4	
90	2275	1.4	8.8	1260	36	2275	90	2275	1.4				16.517	-S3100	50-P180/L4	
89	2292	1.4	8.7	1269	36	2292	89	2292	1.4				16.644	-S3100	50-P180/L4	
81	2509	3.2	8.0	1380	41	2509	81	2509	3.2				18.100	-S8000	40-P180/L4	
81	2518	1.8	7.9	1394	33	2518	81	2518	1.8				18.286	-S4500	50-P180/L4	
79	2592	1.2	7.7	1435	32	2592	79	2592	1.2				18.822	-S3100	50-P180/L4	
77	2652	5.1	7.6	1458	38	2652	77	2652	5.1				19.130	-S14000	40-P180/L4	
75	2732	2.9	7.4	1503	37	2732	75	2732	2.9				19.710	-S8000	40-P180/L4	
74	2760	1.1	7.2	1528	30	2760	74	2760	1.1				20.041	-S3100	50-P180/L4	
74	2764	1.6	7.2	1530	30	2764	74	2764	1.6				20.067	-S4500	50-P180/L4	
69	2949	4.6	6.8	1622	35	2949	69	2949	4.6				21.270	-S14000	40-P180/L4	
66	3080	2.6	6.5	1694	33	3080	66	3080	2.6				22.220	-S8000	40-P180/L4	
66	3085	1.5	6.5	1708	27	3085	66	3085	1.5				22.400	-S4500	50-P180/L4	

Selection tables, 4-pole motors

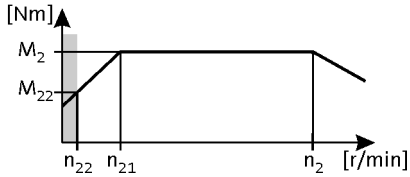

50 Hz: P_N = 22.0 kW
87 Hz: P_N = 38.5 kW

2-stage gearboxes

Mains operation 400 V, 50 Hz			Inverter operation 5 Hz -		- 20 ... 25 Hz		- 50 Hz (1:10)			- 87 Hz (1:17.4)			i	Product	
n_2 [r/min]	M_2 [Nm]	c	n_{22} [r/min]	M_{22} [Nm]	n_{21} [r/min]	M_2 [Nm]	n_2 [r/min]	M_2 [Nm]	c	n_2 [r/min]	M_2 [Nm]	c		g500	m5□□
65	3121	1.0	6.4	1728	27	3121	65	3121	1.0				22.663	-S3100	50-P180/L4
63	3255	4.2	6.2	1790	31	3255	63	3255	4.2				23.480	-S14000	40-P180/L4
60	3384	0.9	5.9	1874	24	3384	60	3384	0.9				24.570	-S3100	50-P180/L4
59	3445	5.5	5.8	1895	30	3445	59	3445	5.5				24.850	-S19000	40-P180/L4
59	3456	2.3	5.8	1901	30	3456	59	3456	2.3				24.930	-S8000	40-P180/L4
56	3653	3.7	5.5	2009	28	3653	56	3653	3.7				26.350	-S14000	40-P180/L4
56	3641	1.2	5.5	2016	23	3641	56	3641	1.2				26.437	-S4500	50-P180/L4
54	3767	5.0	5.3	2071	27	3767	54	3767	5.0				27.170	-S19000	40-P180/L4
53	3827	0.8	5.2	2119	22	3827	53	3827	0.8				27.785	-S3100	50-P180/L4
53	3873	2.1	5.2	2130	26	3873	53	3873	2.1				27.940	-S8000	40-P180/L4
50	4064	1.1	4.9	2250	20	4064	50	4064	1.1				29.511	-S4500	50-P180/L4
49	4139	3.3	4.9	2276	25	4139	49	4139	3.3				29.860	-S14000	40-P180/L4
48	4216	4.5	4.8	2318	24	4216	48	4216	4.5				30.410	-S19000	40-P180/L4
47	4313	1.9	4.7	2372	24	4313	47	4313	1.9				31.110	-S8000	40-P180/L4
46	4474	1.0	4.5	2477	19	4474	46	4474	1.0				32.489	-S4500	50-P180/L4
45	4577	3.0	4.4	2517	22	4577	45	4577	3.0				33.020	-S14000	40-P180/L4
43	4717	4.0	4.3	2594	22	4717	43	4717	4.0				34.030	-S19000	40-P180/L4
42	4842	1.7	4.2	2663	21	4842	42	4842	1.7				34.930	-S8000	40-P180/L4
41	4995	0.9	4.0	2766	17	4995	41	4995	0.9				36.267	-S4500	50-P180/L4
40	5121	2.7	3.9	2816	20	5121	40	5121	2.7				36.940	-S14000	40-P180/L4
39	5258	3.6	3.8	2892	19	5258	39	5258	3.6				37.930	-S19000	40-P180/L4
36	5693	2.4	3.5	3131	18	5693	36	5693	2.4				41.070	-S14000	40-P180/L4

3-stage gearboxes

Mains operation 400 V, 50 Hz			Inverter operation 5 Hz -		- 20 ... 25 Hz		- 50 Hz (1:10)			- 87 Hz (1:17.4)			i	Product	
n_2 [r/min]	M_2 [Nm]	c	n_{22} [r/min]	M_{22} [Nm]	n_{21} [r/min]	M_2 [Nm]	n_2 [r/min]	M_2 [Nm]	c	n_2 [r/min]	M_2 [Nm]	c		g500	m5□□
46	4361	3.1	4.5	2398	23	4361	46	4361	3.1				31.920	-S14000	40-P180/L4
46	4416	4.3	4.5	2428	23	4416	46	4416	4.3				32.320	-S19000	40-P180/L4
46	4417	1.7	4.5	2429	23	4417	46	4417	1.7				32.330	-S8000	40-P180/L4
37	5387	1.5	3.7	2963	19	5387	37	5387	1.5				39.430	-S8000	40-P180/L4
36	5548	3.4	3.6	3051	18	5548	36	5548	3.4				40.610	-S19000	40-P180/L4
36	5577	2.4	3.6	3067	18	5577	36	5577	2.4				40.820	-S14000	40-P180/L4
33	6189	1.3	3.2	3404	16	6189	33	6189	1.3				45.300	-S8000	40-P180/L4
32	6360	2.1	3.1	3498	16	6360	32	6360	2.1				46.550	-S14000	40-P180/L4
30	6753	2.8	2.9	3714	15	6753	30	6753	2.8				49.430	-S19000	40-P180/L4
29	6833	1.2	2.9	3758	15	6813	29	6833	1.2	52	6813	1.1	50.010	-S8000	40-P180/L4
29	6917	2.0	2.9	3804	15	6917	29	6917	2.0				50.630	-S14000	40-P180/L4
26	7702	1.0	2.6	4236	13	7679	26	7702	1.0	46	7679	1.0	56.370	-S8000	40-P180/L4
24	8486	2.2	2.3	4667	12	8486	24	8486	2.2				62.110	-S19000	40-P180/L4

Selection tables, 4-pole motors

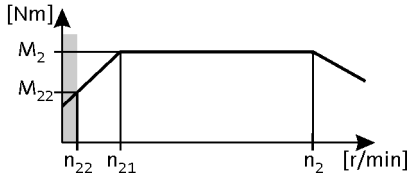

50 Hz: P_N = 22.0 kW
87 Hz: P_N = 38.5 kW

3-stage gearboxes

Mains operation 400 V, 50 Hz			Inverter operation 5 Hz -		- 20 ... 25 Hz		- 50 Hz (1:10)			- 87 Hz (1:17.4)			i	Product		
n_2 [r/min]	M_2 [Nm]	c	n_{22} [r/min]	M_{22} [Nm]	n_{21} [r/min]	M_2 [Nm]	n_2 [r/min]	M_2 [Nm]	c	n_2 [r/min]	M_2 [Nm]	c		g500	m5□□	
23	8847	1.5	2.2	4865	11	8821	23	8847	1.5	40	8821	1.5	64.750	-S14000	40-P180/L4	
21	9394	0.9	2.1	5166	11	9367	21	9394	0.9	38	9367	0.8	68.760	-S8000	40-P180/L4	
20	10090	1.4	2.0	5549	10	10061	20	10090	1.4	35	10061	1.4	73.850	-S14000	40-P180/L4	
19	10646	1.8	1.9	5855	9.4	10615	19	10646	1.8	33	10615	1.8	77.920	-S19000	40-P180/L4	
17	11975	1.6	1.7	6586	8.4	11940	17	11975	1.6	29	11940	1.6	87.650	-S19000	40-P180/L4	
16	12300	1.1	1.6	6765	8.2	12265	16	12300	1.1	29	12265	1.1	90.030	-S14000	40-P180/L4	
14	13960	1.0	1.4	7678	7.2	13920	14	13960	1.0	25	13920	1.0	102.180	-S14000	40-P180/L4	
14	14411	1.3	1.4	7925	7.0	14369	14	14411	1.3	25	14369	1.3	105.480	-S19000	40-P180/L4	
13	15207	0.9	1.3	8363	6.6	15162	13	15207	0.9	23	15162	0.9	111.300	-S14000	40-P180/L4	
13	16022	1.2	1.2	8811	6.3	15976	13	16022	1.2	22	15976	1.2	117.270	-S19000	40-P180/L4	
11	17686	1.1	1.1	9727	5.7	17635	11	17686	1.1	20	17635	1.1	129.450	-S19000	40-P180/L4	
10	19849	1.0	1.0	10916	5.1	19791	10	19849	1.0	18	19791	1.0	145.280	-S19000	40-P180/L4	
8.9	22490	0.8	0.9	12368	4.5	22425	8.9	22490	0.8	16	22425	0.9	164.610	-S19000	40-P180/L4	

Selection tables, 4-pole motors

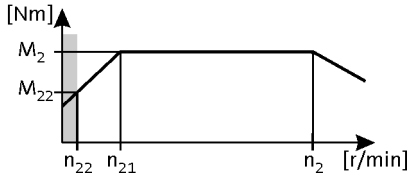

50 Hz: P_N = 30.0 kW
87 Hz: P_N = 52.5 kW

2-stage gearboxes

Mains operation 400 V, 50 Hz			Inverter operation 5 Hz -		- 20 ... 25 Hz		- 50 Hz (1:10)			- 87 Hz (1:17.4)			i	Product		
n_2 [r/min]	M_2 [Nm]	c	n_{22} [r/min]	M_{22} [Nm]	n_{21} [r/min]	M_2 [Nm]	n_2 [r/min]	M_2 [Nm]	c	n_2 [r/min]	M_2 [Nm]	c		g500	m5□□	
299	931	2.0	29	411	121	931	299	931	2.0				4.951	-S3100	50-P180/V4	
245	1134	1.3	24	501	100	1134	245	1134	1.3				6.029	-S2100	50-P180/V4	
229	1213	2.0	23	536	93	1213	229	1213	2.0				6.450	-S4500	50-P180/V4	
227	1222	1.7	22	540	92	1222	227	1222	1.7				6.499	-S3100	50-P180/V4	
215	1292	1.2	21	570	87	1292	215	1292	1.2				6.870	-S2100	50-P180/V4	
210	1327	1.9	21	586	85	1327	210	1327	1.9				7.056	-S4500	50-P180/V4	
200	1393	1.6	20	615	81	1393	200	1393	1.6				7.406	-S3100	50-P180/V4	
182	1526	5.5	18	839	91	1526	182	1526	5.5				8.070	-S14000	40-P200/M4	
179	1556	1.0	18	687	73	1556	179	1556	1.0				8.272	-S2100	50-P180/V4	
166	1677	1.4	16	740	67	1677	166	1677	1.4				8.917	-S3100	50-P180/V4	
135	2056	1.1	13	908	55	2056	135	2056	1.1				10.932	-S3100	50-P180/V4	
126	2208	2.0	12	975	51	2208	126	2208	2.0				11.740	-S4500	50-P180/V4	
115	2415	1.9	11	1066	47	2415	115	2415	1.9				12.843	-S4500	50-P180/V4	
113	2464	1.8	11	1088	46	2464	113	2464	1.8				13.105	-S4500	50-P180/V4	
90	3081	1.5	8.9	1360	37	3081	90	3081	1.5				16.381	-S4500	50-P180/V4	
81	3439	1.3	7.9	1518	33	3439	81	3439	1.3				18.286	-S4500	50-P180/V4	
75	3726	2.2	7.4	2049	37	3726	75	3726	2.2				19.710	-S8000	40-P200/M4	
74	3774	1.2	7.2	1666	30	3774	74	3774	1.2				20.067	-S4500	50-P180/V4	
69	4021	3.4	6.8	2212	35	4021	69	4021	3.4				21.270	-S14000	40-P200/M4	
67	4176	4.6	6.6	2297	33	4176	67	4176	4.6				22.090	-S19000	40-P200/M4	
66	4200	1.9	6.5	2310	33	4200	66	4200	1.9				22.220	-S8000	40-P200/M4	
66	4212	1.1	6.5	1860	27	4212	66	4212	1.1				22.400	-S4500	50-P180/V4	
63	4439	3.1	6.2	2441	31	4439	63	4439	3.1				23.480	-S14000	40-P200/M4	
59	4698	4.0	5.8	2584	30	4698	59	4698	4.0				24.850	-S19000	40-P200/M4	
59	4713	1.7	5.8	2592	30	4713	59	4713	1.7				24.930	-S8000	40-P200/M4	
56	4981	2.7	5.5	2740	28	4981	56	4981	2.7				26.350	-S14000	40-P200/M4	
56	4972	0.9	5.5	2195	23	4972	56	4972	0.9				26.437	-S4500	50-P180/V4	
54	5136	3.7	5.3	2825	27	5136	54	5136	3.7				27.170	-S19000	40-P200/M4	
53	5282	1.5	5.2	2905	26	5282	53	5282	1.5				27.940	-S8000	40-P200/M4	
50	5550	0.8	4.9	2450	20	5550	50	5550	0.8				29.511	-S4500	50-P180/V4	
49	5645	2.4	4.9	3105	25	5645	49	5645	2.4				29.860	-S14000	40-P200/M4	
48	5749	3.3	4.8	3162	24	5749	48	5749	3.3				30.410	-S19000	40-P200/M4	
47	5881	1.4	4.7	3235	24	5881	47	5881	1.4				31.110	-S8000	40-P200/M4	
45	6242	2.2	4.4	3433	22	6242	45	6242	2.2				33.020	-S14000	40-P200/M4	
43	6433	3.0	4.3	3538	22	6433	43	6433	3.0				34.030	-S19000	40-P200/M4	

Selection tables, 4-pole motors

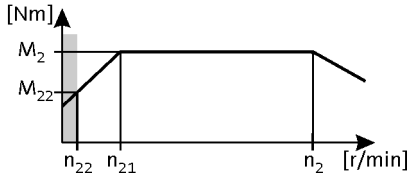

50 Hz: P_N = 30.0 kW
87 Hz: P_N = 52.5 kW

2-stage gearboxes

Mains operation 400 V, 50 Hz			Inverter operation 5 Hz -		- 20 ... 25 Hz		- 50 Hz (1:10)			- 87 Hz (1:17.4)			i	Product		
n_2 [r/min]	M_2 [Nm]	c	n_{22} [r/min]	M_{22} [Nm]	n_{21} [r/min]	M_2 [Nm]	n_2 [r/min]	M_2 [Nm]	c	n_2 [r/min]	M_2 [Nm]	c		g500	m5□□	
40	6983	2.0	3.9	3841	20	6983	40	6983	2.0				36.940	-S14000	40-P200/M4	
39	7170	2.7	3.8	3944	19	7170	39	7170	2.7				37.930	-S19000	40-P200/M4	

3-stage gearboxes

Mains operation 400 V, 50 Hz			Inverter operation 5 Hz -		- 20 ... 25 Hz		- 50 Hz (1:10)			- 87 Hz (1:17.4)			i	Product		
n_2 [r/min]	M_2 [Nm]	c	n_{22} [r/min]	M_{22} [Nm]	n_{21} [r/min]	M_2 [Nm]	n_2 [r/min]	M_2 [Nm]	c	n_2 [r/min]	M_2 [Nm]	c		g500	m5□□	
46	5947	2.3	4.5	3271	23	5947	46	5947	2.3				31.920	-S14000	40-P200/M4	
46	6021	3.2	4.5	3312	23	6021	46	6021	3.2				32.320	-S19000	40-P200/M4	
46	6023	1.3	4.5	3313	23	6023	46	6023	1.3				32.330	-S8000	40-P200/M4	
37	7346	1.1	3.7	4041	19	7346	37	7346	1.1				39.430	-S8000	40-P200/M4	
36	7566	2.5	3.6	4162	18	7566	36	7566	2.5				40.610	-S19000	40-P200/M4	
36	7605	1.8	3.6	4183	18	7605	36	7605	1.8				40.820	-S14000	40-P200/M4	
33	8440	1.0	3.2	4642	16	8440	33	8440	1.0				45.300	-S8000	40-P200/M4	
32	8673	1.6	3.1	4770	16	8673	32	8673	1.6				46.550	-S14000	40-P200/M4	
30	9209	2.1	2.9	5066	15	9209	30	9209	2.1				49.430	-S19000	40-P200/M4	
29	9317	0.9	2.9	5125	15	9317	29	9317	0.9				50.010	-S8000	40-P200/M4	
29	9433	1.4	2.9	5189	15	9433	29	9433	1.4				50.630	-S14000	40-P200/M4	
24	11572	1.6	2.3	6365	12	11572	24	11572	1.6				62.110	-S19000	40-P200/M4	
23	12063	1.1	2.2	6636	11	12028	23	12063	1.1	40	12028	1.1	64.750	-S14000	40-P200/M4	
20	13759	1.0	2.0	7568	10	13719	20	13759	1.0	35	13719	1.0	73.850	-S14000	40-P200/M4	
19	14517	1.3	1.9	7985	9.4	14475	19	14517	1.3	33	14475	1.3	77.920	-S19000	40-P200/M4	
17	16330	1.2	1.7	8982	8.4	16282	17	16330	1.2	29	16282	1.2	87.650	-S19000	40-P200/M4	
16	16773	0.8	1.6	9226	8.2	16725	16	16773	0.8	29	16725	0.8	90.030	-S14000	40-P200/M4	
14	19652	1.0	1.4	10809	7.0	19595	14	19652	1.0	25	19595	1.0	105.480	-S19000	40-P200/M4	
13	21848	0.9	1.2	12018	6.3	21785	13	21848	0.9	22	21785	0.9	117.270	-S19000	40-P200/M4	

Selection tables, 4-pole motors

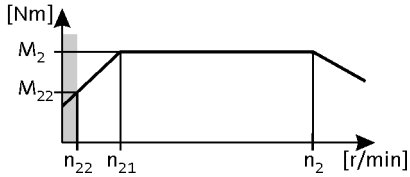

50 Hz: P_N = 37.0 kW
87 Hz: P_N = 64.8 kW

2-stage gearboxes

Mains operation 400 V, 50 Hz			Inverter operation 5 Hz -		- 20 ... 25 Hz		- 50 Hz (1:10)			- 87 Hz (1:17.4)			i	Product g500	m5□□
n_2 [r/min]	M_2 [Nm]	c	n_{22} [r/min]	M_{22} [Nm]	n_{21} [r/min]	M_2 [Nm]	n_2 [r/min]	M_2 [Nm]	c	n_2 [r/min]	M_2 [Nm]	c			
183	1871	4.5	18	1026	92	1871	183	1871	4.5				8.070	-S14000	40-P225/M4
59	5781	1.4	5.8	3168	30	5781	59	5781	1.4				24.930	-S8000	40-P225/M4
56	6110	2.2	5.5	3348	28	6110	56	6110	2.2				26.350	-S14000	40-P225/M4
53	6479	1.2	5.2	3550	27	6479	53	6479	1.2				27.940	-S8000	40-P225/M4
50	6924	2.0	4.9	3794	25	6924	50	6924	2.0				29.860	-S14000	40-P225/M4
45	7657	1.8	4.4	4196	22	7657	45	7657	1.8				33.020	-S14000	40-P225/M4
39	8795	2.2	3.8	4820	20	8795	39	8795	2.2				37.930	-S19000	40-P225/M4

3-stage gearboxes

Mains operation 400 V, 50 Hz			Inverter operation 5 Hz -		- 20 ... 25 Hz		- 50 Hz (1:10)			- 87 Hz (1:17.4)			i	Product g500	m5□□
n_2 [r/min]	M_2 [Nm]	c	n_{22} [r/min]	M_{22} [Nm]	n_{21} [r/min]	M_2 [Nm]	n_2 [r/min]	M_2 [Nm]	c	n_2 [r/min]	M_2 [Nm]	c			
46	7295	1.9	4.5	3998	23	7295	46	7295	1.9				31.920	-S14000	40-P225/M4
46	7386	2.6	4.5	4048	23	7386	46	7386	2.6				32.320	-S19000	40-P225/M4
46	7389	1.0	4.5	4049	23	7389	46	7389	1.0				32.330	-S8000	40-P225/M4
38	9011	0.9	3.7	4938	19	9011	38	9011	0.9				39.430	-S8000	40-P225/M4
36	9281	2.1	3.6	5086	18	9281	36	9281	2.1				40.610	-S19000	40-P225/M4
36	9329	1.5	3.6	5112	18	9329	36	9329	1.5				40.820	-S14000	40-P225/M4
32	10638	1.3	3.1	5830	16	10638	32	10638	1.3				46.550	-S14000	40-P225/M4
30	11297	1.7	2.9	6190	15	11297	30	11297	1.7				49.430	-S19000	40-P225/M4
29	11571	1.2	2.9	6341	15	11571	29	11571	1.2				50.630	-S14000	40-P225/M4
24	14194	1.3	2.3	7778	12	14194	24	14194	1.3				62.110	-S19000	40-P225/M4
23	14798	0.9	2.2	8109	11	14798	23	14798	0.9	40	14801	0.9	64.750	-S14000	40-P225/M4
20	16877	0.8	2.0	9249	10	16877	20	16877	0.8	35	16881	0.8	73.850	-S14000	40-P225/M4
19	17808	1.1	1.9	9758	9.5	17808	19	17808	1.1	33	17811	1.1	77.920	-S19000	40-P225/M4
17	20031	1.0	1.7	10977	8.4	20031	17	20031	1.0	30	20035	1.0	87.650	-S19000	40-P225/M4

Selection tables, 4-pole motors

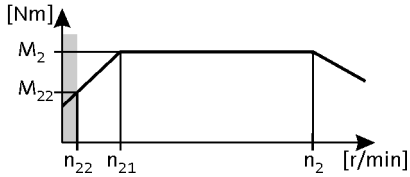

50 Hz: P_N = 45.0 kW
87 Hz: P_N = 78.7 kW

2-stage gearboxes

Mains operation 400 V, 50 Hz			Inverter operation 5 Hz -		- 20 ... 25 Hz		- 50 Hz (1:10)			- 87 Hz (1:17.4)			i	Product		
n_2 [r/min]	M_2 [Nm]	c	n_{22} [r/min]	M_{22} [Nm]	n_{21} [r/min]	M_2 [Nm]	n_2 [r/min]	M_2 [Nm]	c	n_2 [r/min]	M_2 [Nm]	c		g500	m5□□	
59	7031	1.1	5.8	3869	30	7031	59	7031	1.1				24.930	-S8000	40-P225/L4	
53	7880	1.0	5.2	4336	27	7880	53	7880	1.0				27.940	-S8000	40-P225/L4	
45	9312	1.5	4.4	5125	22	9312	45	9312	1.5				33.020	-S14000	40-P225/L4	

3-stage gearboxes

Mains operation 400 V, 50 Hz			Inverter operation 5 Hz -		- 20 ... 25 Hz		- 50 Hz (1:10)			- 87 Hz (1:17.4)			i	Product		
n_2 [r/min]	M_2 [Nm]	c	n_{22} [r/min]	M_{22} [Nm]	n_{21} [r/min]	M_2 [Nm]	n_2 [r/min]	M_2 [Nm]	c	n_2 [r/min]	M_2 [Nm]	c		g500	m5□□	
46	8872	1.5	4.5	4883	23	8872	46	8872	1.5				31.920	-S14000	40-P225/L4	
46	8983	2.1	4.5	4944	23	8983	46	8983	2.1				32.320	-S19000	40-P225/L4	
46	8986	0.8	4.5	4945	23	8986	46	8986	0.8				32.330	-S8000	40-P225/L4	
36	11288	1.7	3.6	6212	18	11288	36	11288	1.7				40.610	-S19000	40-P225/L4	
36	11346	1.2	3.6	6244	18	11346	36	11346	1.2				40.820	-S14000	40-P225/L4	
32	12939	1.1	3.1	7120	16	12939	32	12939	1.1				46.550	-S14000	40-P225/L4	
30	13739	1.4	2.9	7561	15	13739	30	13739	1.4				49.430	-S19000	40-P225/L4	
29	14073	1.0	2.9	7744	15	14073	29	14073	1.0				50.630	-S14000	40-P225/L4	
24	17264	1.1	2.3	9500	12	17264	24	17264	1.1				62.110	-S19000	40-P225/L4	
19	21658	0.9	1.9	11919	9.5	21658	19	21658	0.9				77.920	-S19000	40-P225/L4	

Selection tables, 4-pole motors

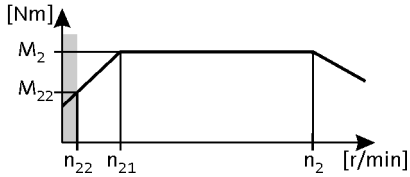

50 Hz: P_N = 55.0 kW
87 Hz: P_N = 87.0 kW

3-stage gearboxes

Mains operation 400 V, 50 Hz			Inverter operation 5 Hz -		- 20 ... 25 Hz		- 50 Hz (1:10)			- 87 Hz (1:17.4)			i	Product		
n_2 [r/min]	M_2 [Nm]	c	n_{22} [r/min]	M_{22} [Nm]	n_{21} [r/min]	M_2 [Nm]	n_2 [r/min]	M_2 [Nm]	c	n_2 [r/min]	M_2 [Nm]	c		g500	m5□□	
37	13759	1.4	3.6	7571	18	13759	37	13759	1.4				40.610	-S19000	40-P250/M4	
36	13830	1.0	3.6	7610	18	13830	36	13830	1.0				40.820	-S14000	40-P250/M4	
32	15771	0.9	3.1	8678	16	15771	32	15771	0.9				46.550	-S14000	40-P250/M4	
30	16747	1.1	2.9	9215	15	16747	30	16747	1.1				49.430	-S19000	40-P250/M4	
24	21043	0.9	2.3	11579	12	21043	24	21043	0.9				62.110	-S19000	40-P250/M4	

Dimensions, notes

Notes on the dimensions

The following legend shows the layout of the dimension sheets.

Product gearbox

g500-S130

Driven shaft design

Abmessungen mit Hohlwelle

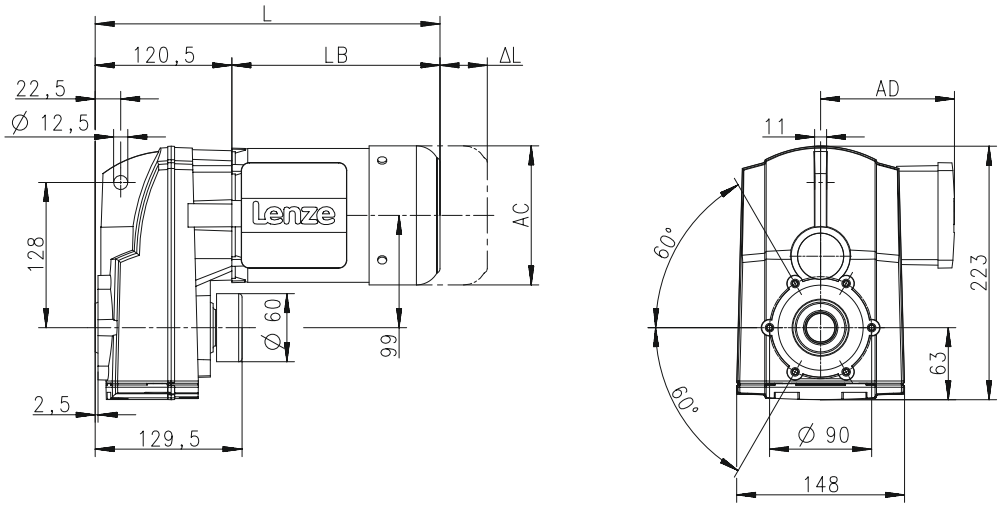

Product Motor

			MD□MA□□				
			063-12	063-32	063-42	071-32	071-42
Gesamtlänge	L	[mm]	304			324	
Länge Motor	LB	[mm]	183			203	
Länge Motoranbauten	ΔL	[mm]	170			165	
Motordurchmesser	AC	[mm]	123			139	
Abstand Motor/Anschluss	AD	[mm]	100			109	

Distance of motor centre to the end of terminal box

Total length of the drive without built-on accessories

Motor diameter

Motor length without built-on accessories

Additional length of the built-on accessories (longest version)

Dimensions, 4-pole motors

g500-S130

Dimensions with hollow shaft
Gearbox design: HDR, HCR, HCK

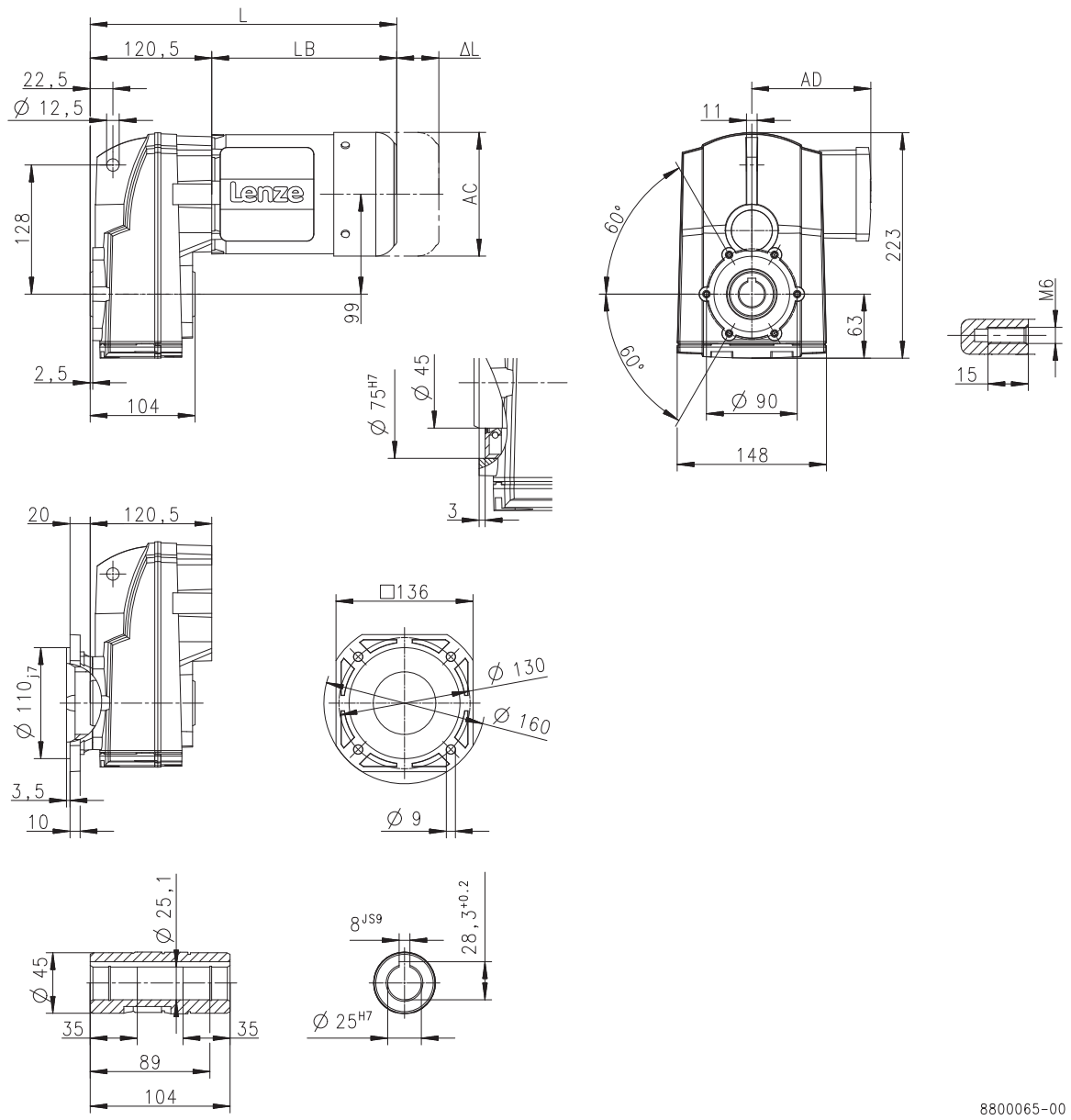

			MD□MA□□				
			063-12	063-32	063-42	071-32	071-42
Total length	L	[mm]	304			324	
Motor length	LB	[mm]	183			203	
Length of motor options	Δ L	[mm]	170			165	
Motor diameter	AC	[mm]	123			139	
Distance motor/connection	AD	[mm]	100			109	

L = length of the motor without built-on accessories
ΔL = additional length of the built-on accessories (longest type)

Dimensions, 4-pole motors

g500-S130

Dimensions with hollow shaft
Gearbox design: HDR, HCR, HCK

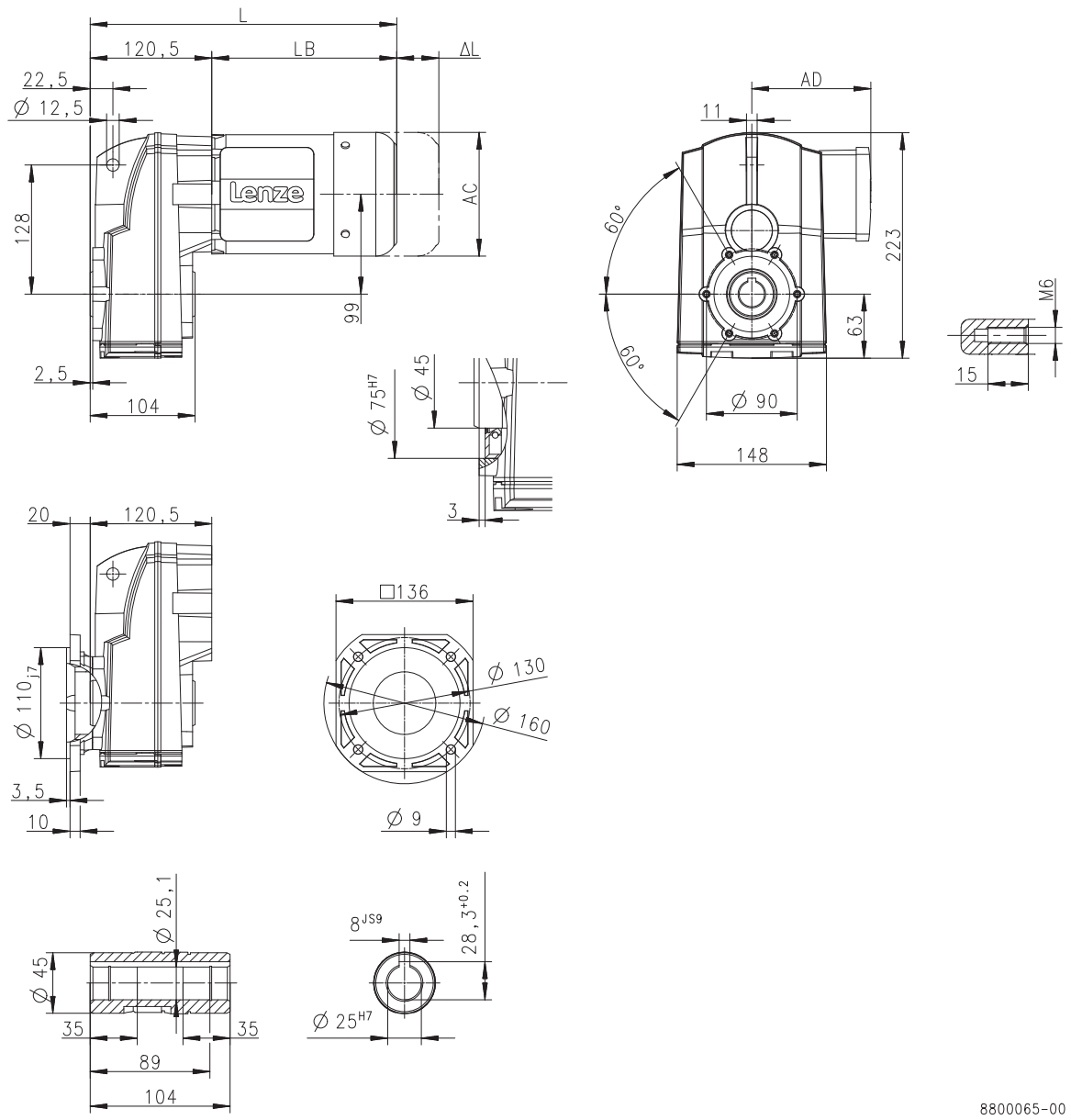

			m550		
			-P80/M4	-P90/M4	-P90/L4
Total length	L	[mm]	381	445	
Motor length	LB	[mm]	260	324	
Length of motor options	Δ L	[mm]	183	175	
Motor diameter	AC	[mm]	157	177	
Distance motor/connection	AD	[mm]	148	154	

L = length of the motor without built-on accessories
ΔL = additional length of the built-on accessories (longest type)

Dimensions, 4-pole motors

g500-S130

Dimensions with hollow shaft
Gearbox design: HBR

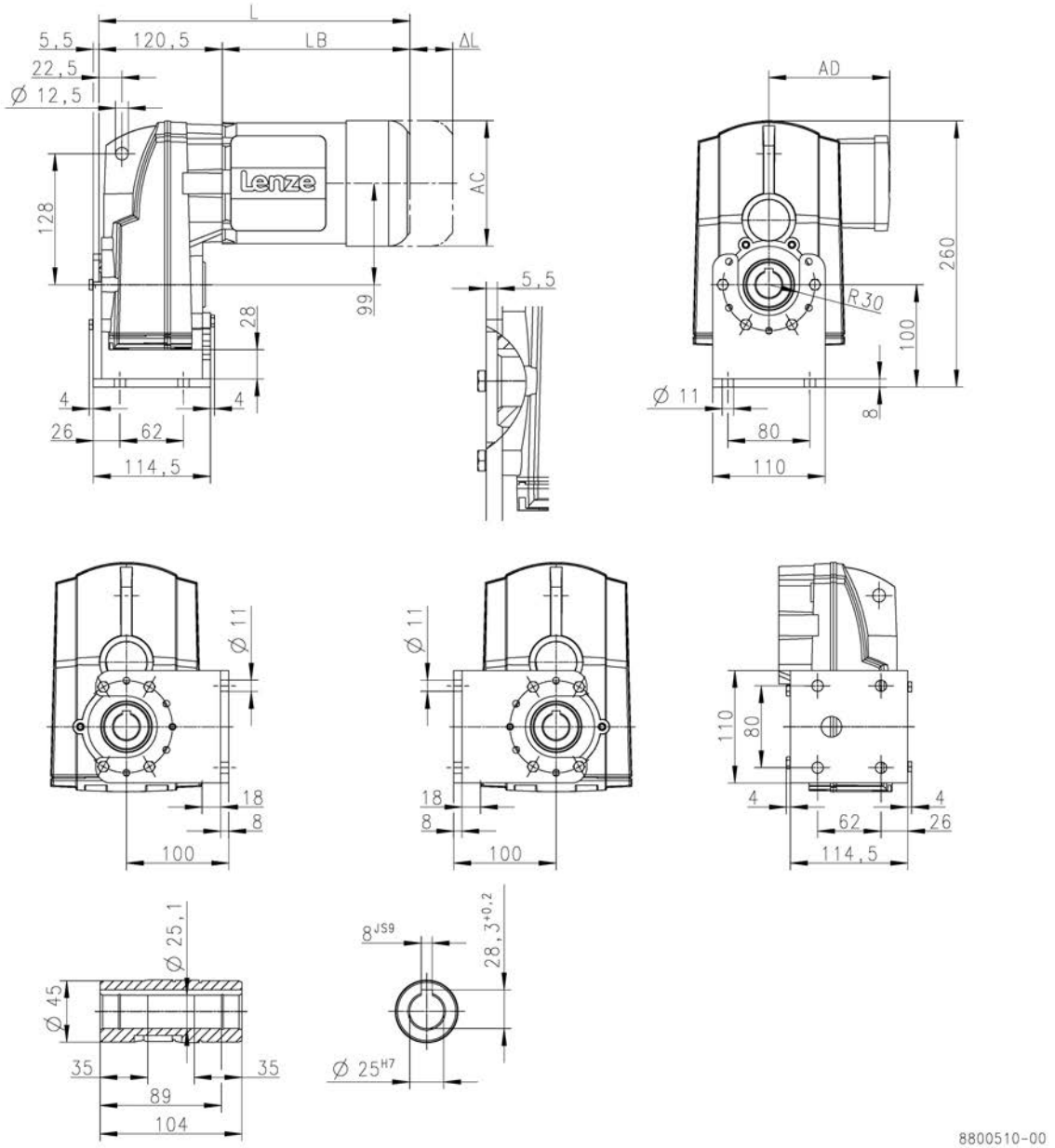

			MD□MA□□				
			063-12	063-32	063-42	071-32	071-42
Total length	L	[mm]	304			324	
Motor length	LB	[mm]	183			203	
Length of motor options	Δ L	[mm]	170			165	
Motor diameter	AC	[mm]	123			139	
Distance motor/connection	AD	[mm]	100			109	

L = length of the motor without built-on accessories
ΔL = additional length of the built-on accessories (longest type)

Dimensions, 4-pole motors

g500-S130

Dimensions with hollow shaft
Gearbox design: HBR

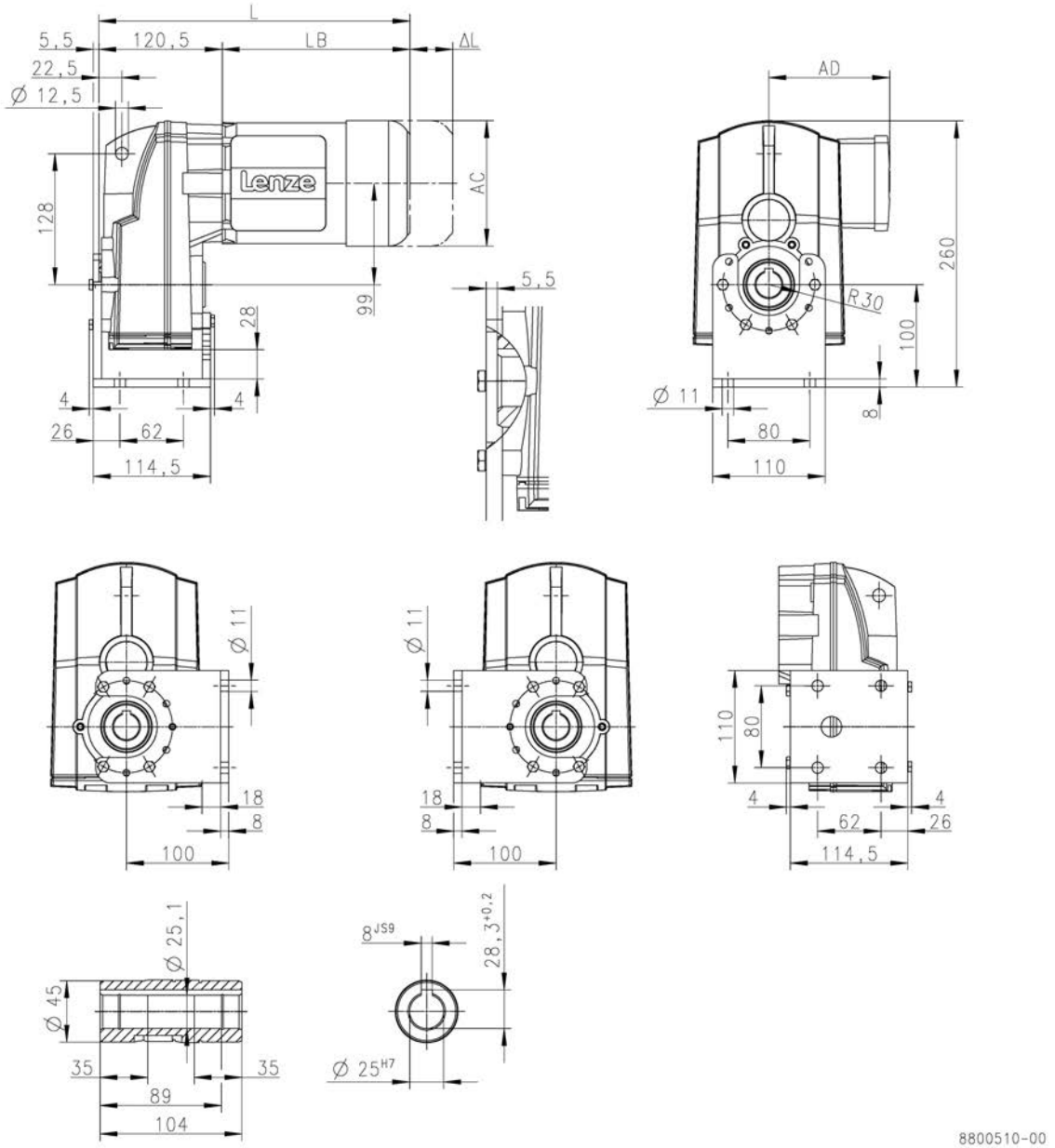

			m550		
			-P80/M4	-P90/M4	-P90/L4
Total length	L	[mm]	381	445	
Motor length	LB	[mm]	260	324	
Length of motor options	Δ L	[mm]	183	175	
Motor diameter	AC	[mm]	157	177	
Distance motor/connection	AD	[mm]	148	154	

L = length of the motor without built-on accessories
ΔL = additional length of the built-on accessories (longest type)

Dimensions, 4-pole motors

g500-S130

Dimensions hollow shaft with shrink disc
Gearbox design: SDR, SCR, SCK

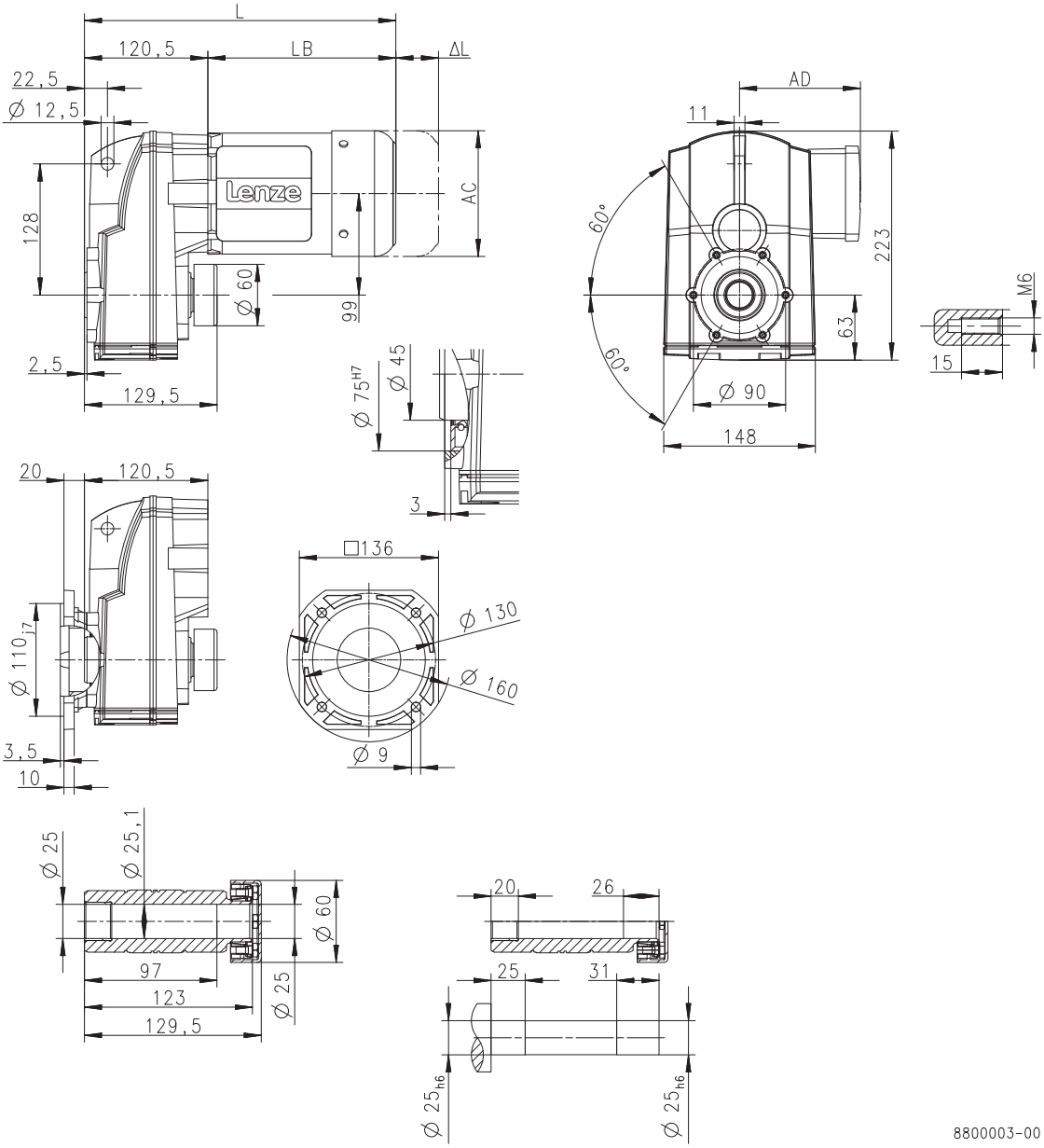

			MD□MA□□				
			063-12	063-32	063-42	071-32	071-42
Total length	L	[mm]	304			324	
Motor length	LB	[mm]	183			203	
Length of motor options	Δ L	[mm]	170			165	
Motor diameter	AC	[mm]	123			139	
Distance motor/connection	AD	[mm]	100			109	

L = length of the motor without built-on accessories
ΔL = additional length of the built-on accessories (longest type)

1 - Shrink disc dimensions

Dimensions, 4-pole motors

g500-S130

Dimensions hollow shaft with shrink disc
Gearbox design: SDR, SCR, SCK

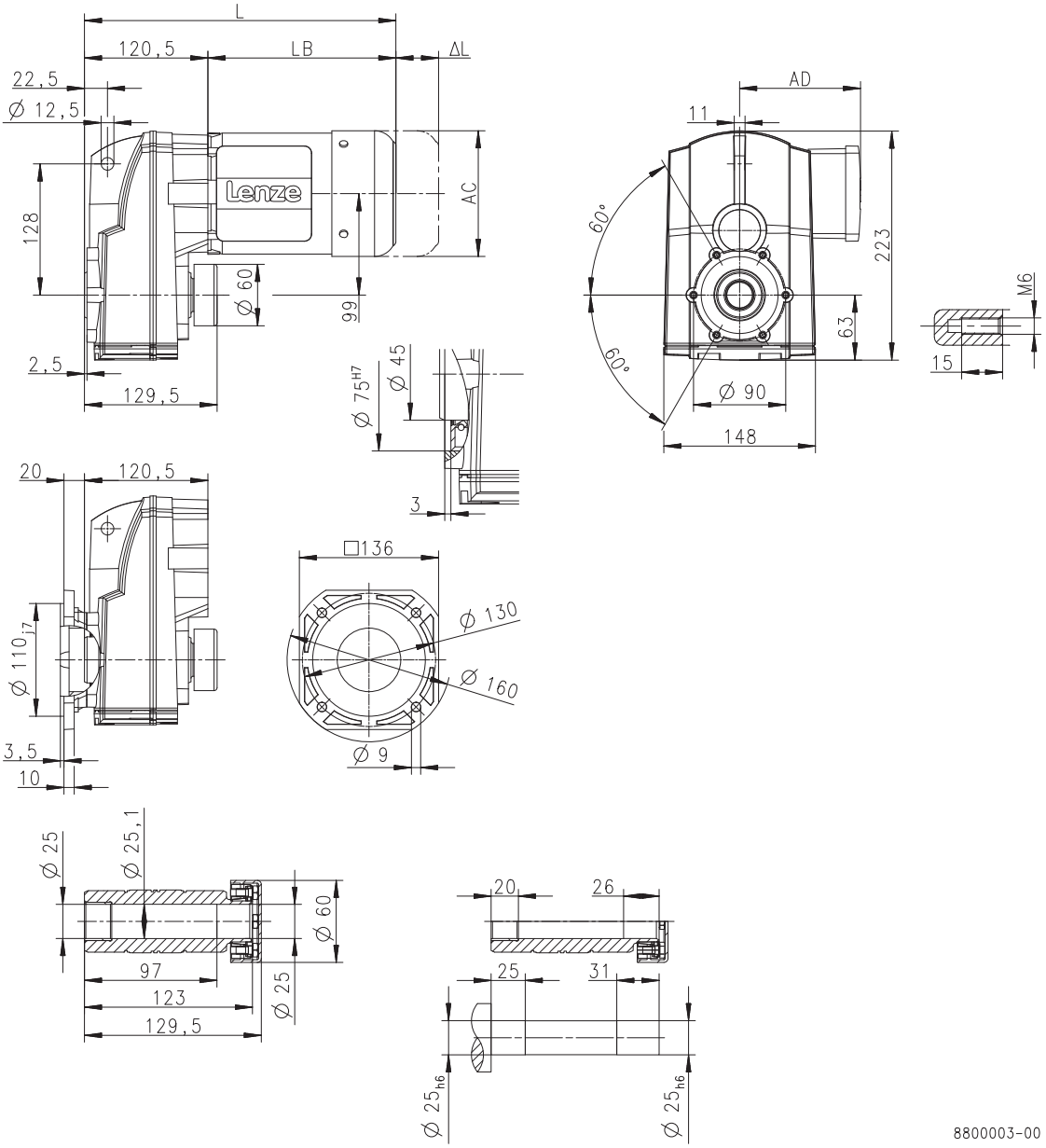

			m550		
			-P80/M4	-P90/M4	-P90/L4
Total length	L	[mm]	381	445	
Motor length	LB	[mm]	260	324	
Length of motor options	Δ L	[mm]	183	175	
Motor diameter	AC	[mm]	157	177	
Distance motor/connection	AD	[mm]	148	154	

L = length of the motor without built-on accessories
ΔL = additional length of the built-on accessories (longest type)

1 - Shrink disc dimensions

Dimensions, 4-pole motors

g500-S130

Dimensions with solid shaft
Gearbox design: VDR, VCR, VCK

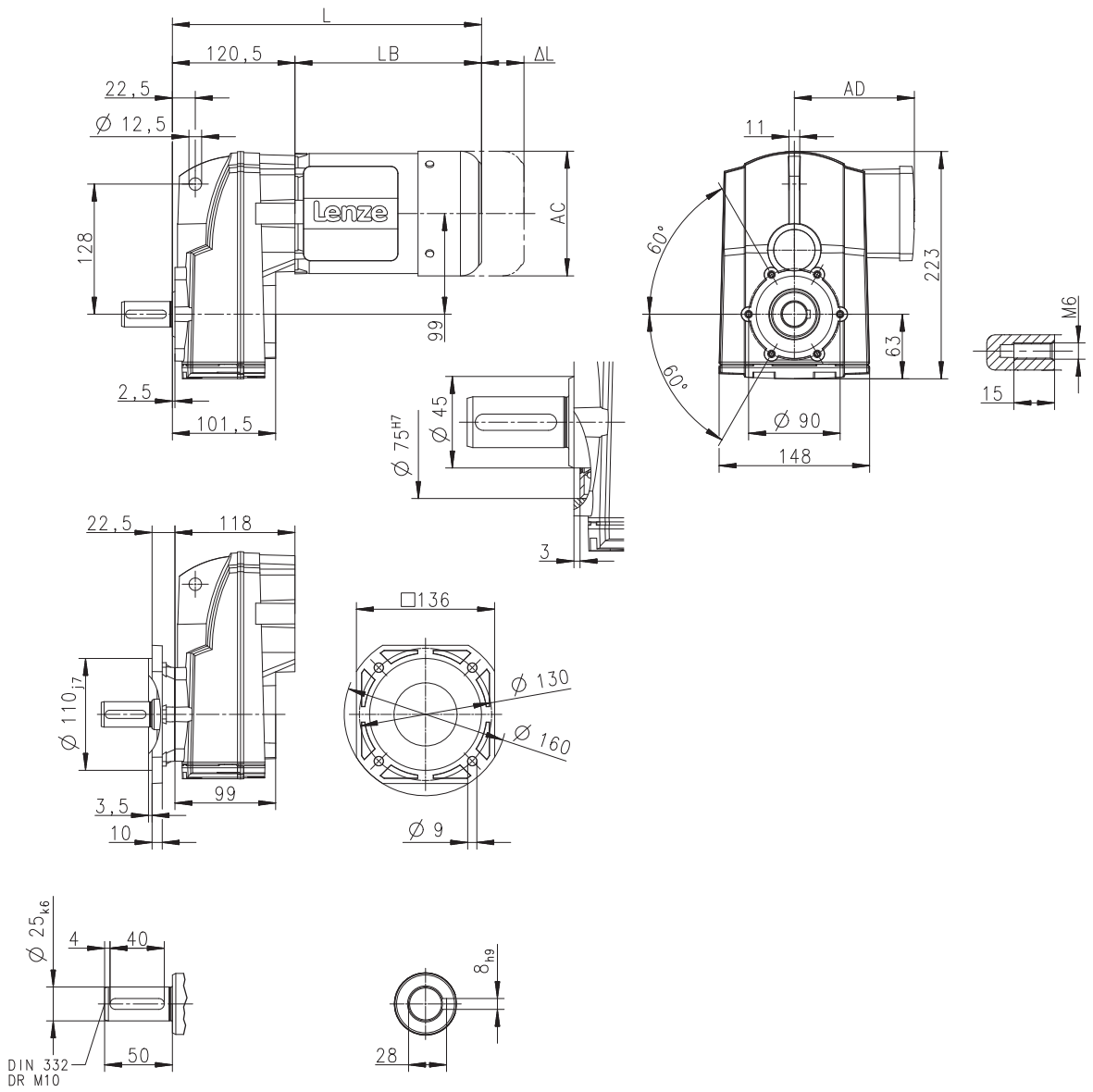

			MD□MA□□				
			063-12	063-32	063-42	071-32	071-42
Total length	L	[mm]	304			324	
Motor length	LB	[mm]	183			203	
Length of motor options	Δ L	[mm]	170			165	
Motor diameter	AC	[mm]	123			139	
Distance motor/connection	AD	[mm]	100			109	

L = length of the motor without built-on accessories
ΔL = additional length of the built-on accessories (longest type)

Dimensions, 4-pole motors

g500-S130

Dimensions with solid shaft
Gearbox design: VDR, VCR, VCK

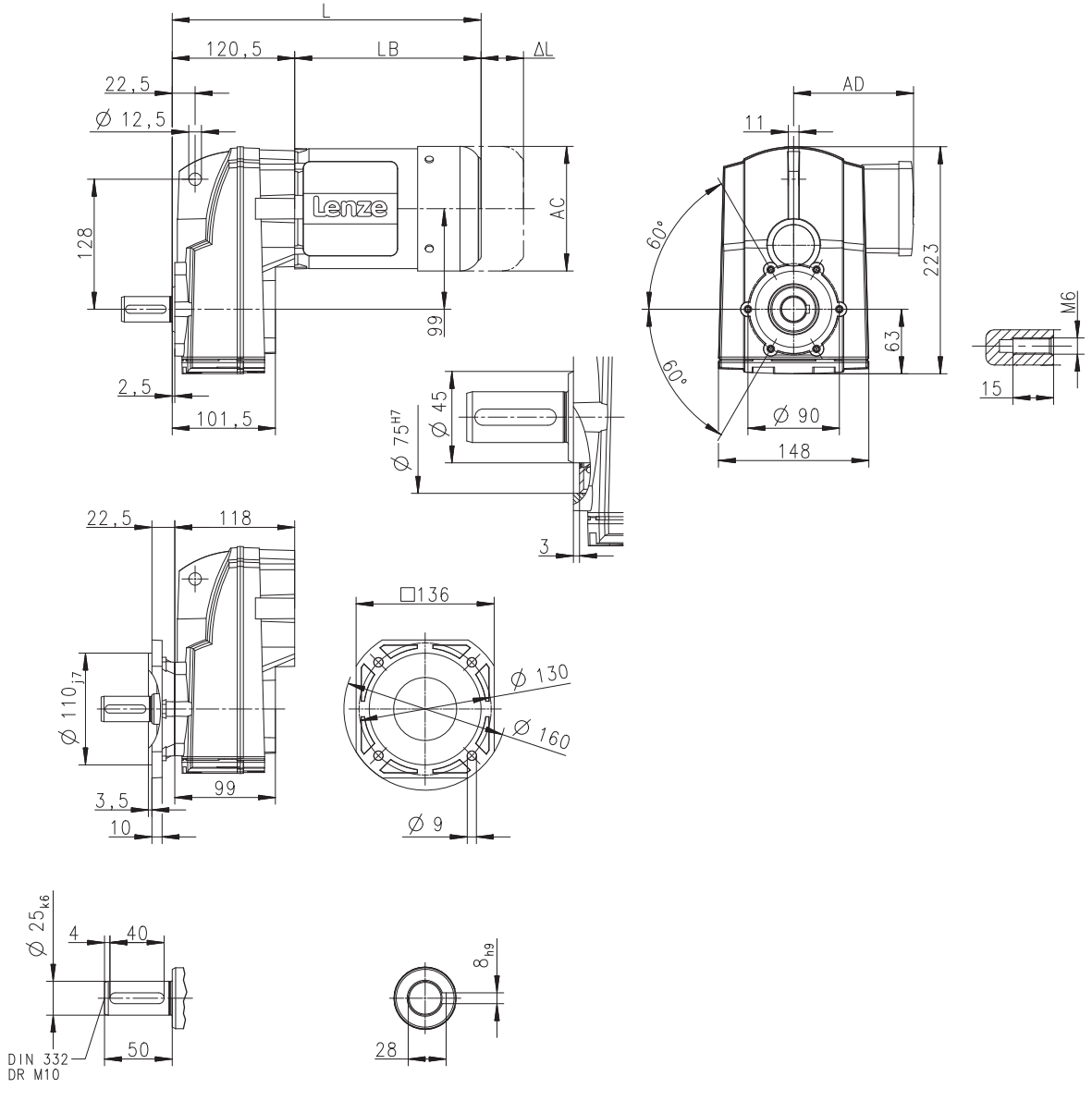

			m550		
			-P80/M4	-P90/M4	-P90/L4
Total length	L	[mm]	381	445	
Motor length	LB	[mm]	260	324	
Length of motor options	Δ L	[mm]	183	175	
Motor diameter	AC	[mm]	157	177	
Distance motor/connection	AD	[mm]	148	154	

L = length of the motor without built-on accessories
ΔL = additional length of the built-on accessories (longest type)

Dimensions, 4-pole motors

g500-S130

Dimensions with solid shaft
Gearbox design: VBR

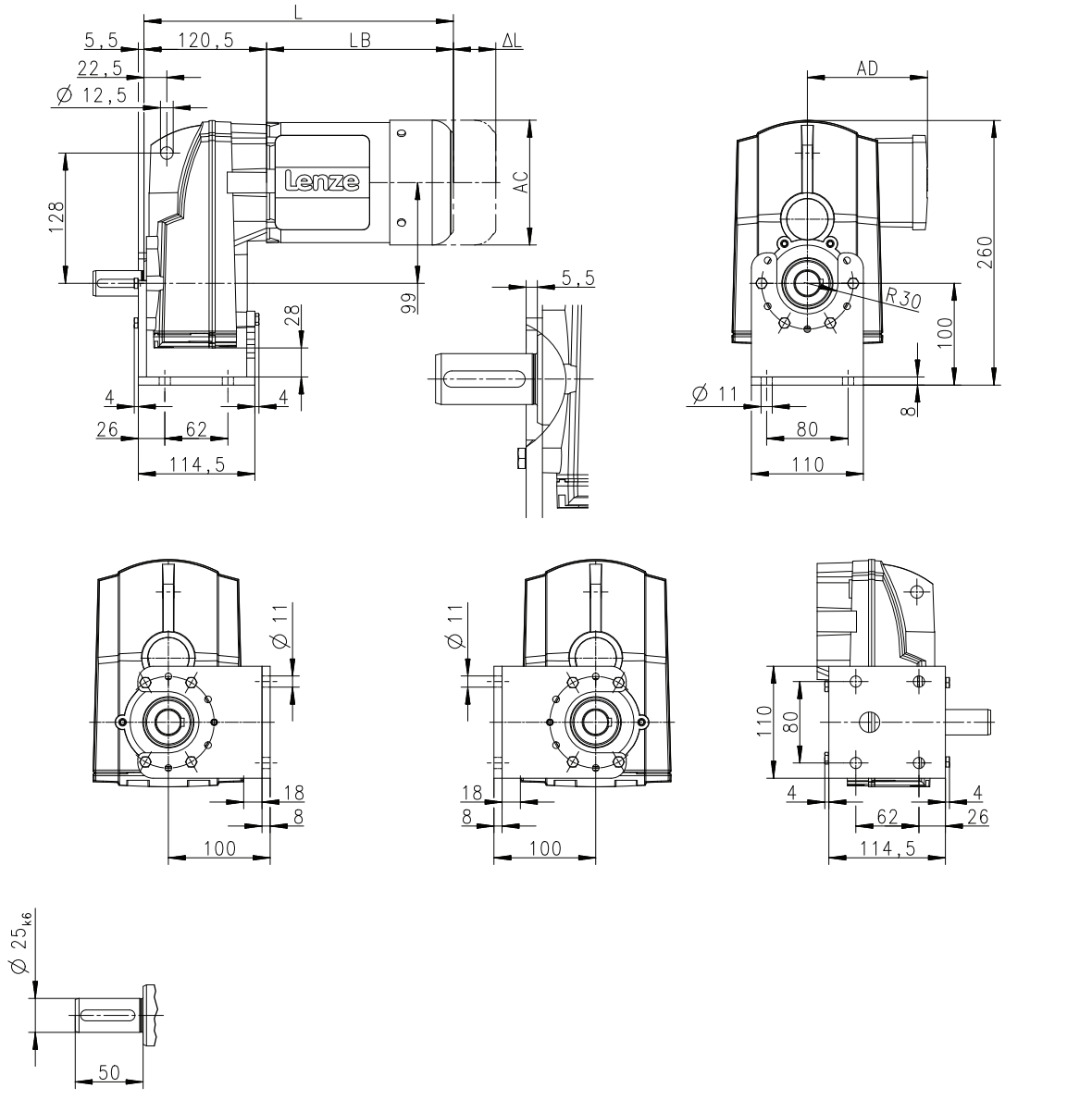

			MD□MA□□				
			063-12	063-32	063-42	071-32	071-42
Total length	L	[mm]	304			324	
Motor length	LB	[mm]	183			203	
Length of motor options	Δ L	[mm]	170			165	
Motor diameter	AC	[mm]	123			139	
Distance motor/connection	AD	[mm]	100			109	

L = length of the motor without built-on accessories
ΔL = additional length of the built-on accessories (longest type)

Dimensions, 4-pole motors

g500-S130

Dimensions with solid shaft
Gearbox design: VBR

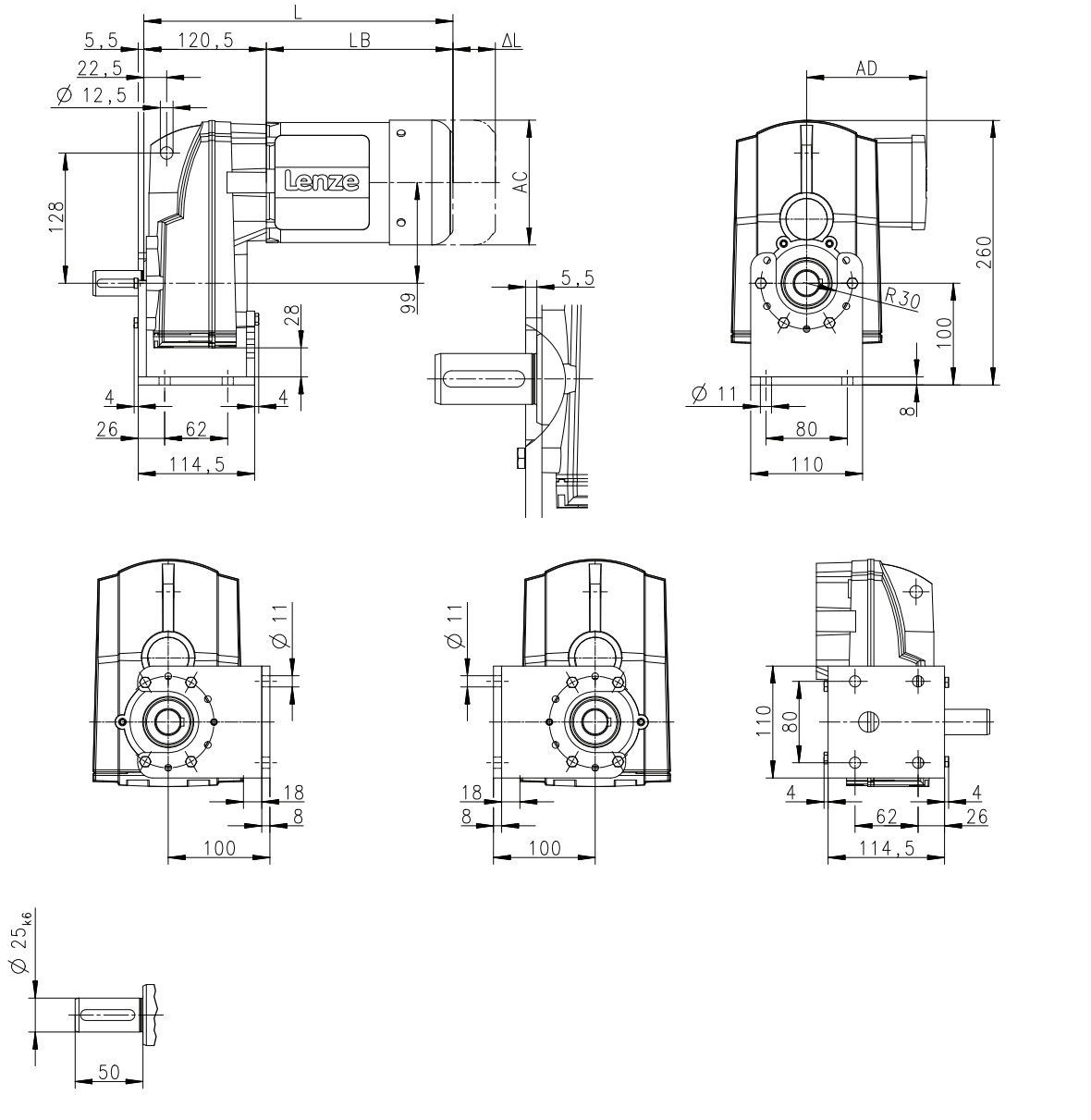

			m550		
			-P80/M4	-P90/M4	-P90/L4
Total length	L	[mm]	381	445	
Motor length	LB	[mm]	260	324	
Length of motor options	Δ L	[mm]	183	175	
Motor diameter	AC	[mm]	157	177	
Distance motor/connection	AD	[mm]	148	154	

L = length of the motor without built-on accessories
ΔL = additional length of the built-on accessories (longest type)

Dimensions, 4-pole motors

g500-S220

Dimensions with hollow shaft
Gearbox design: HDR, HCR, HCK

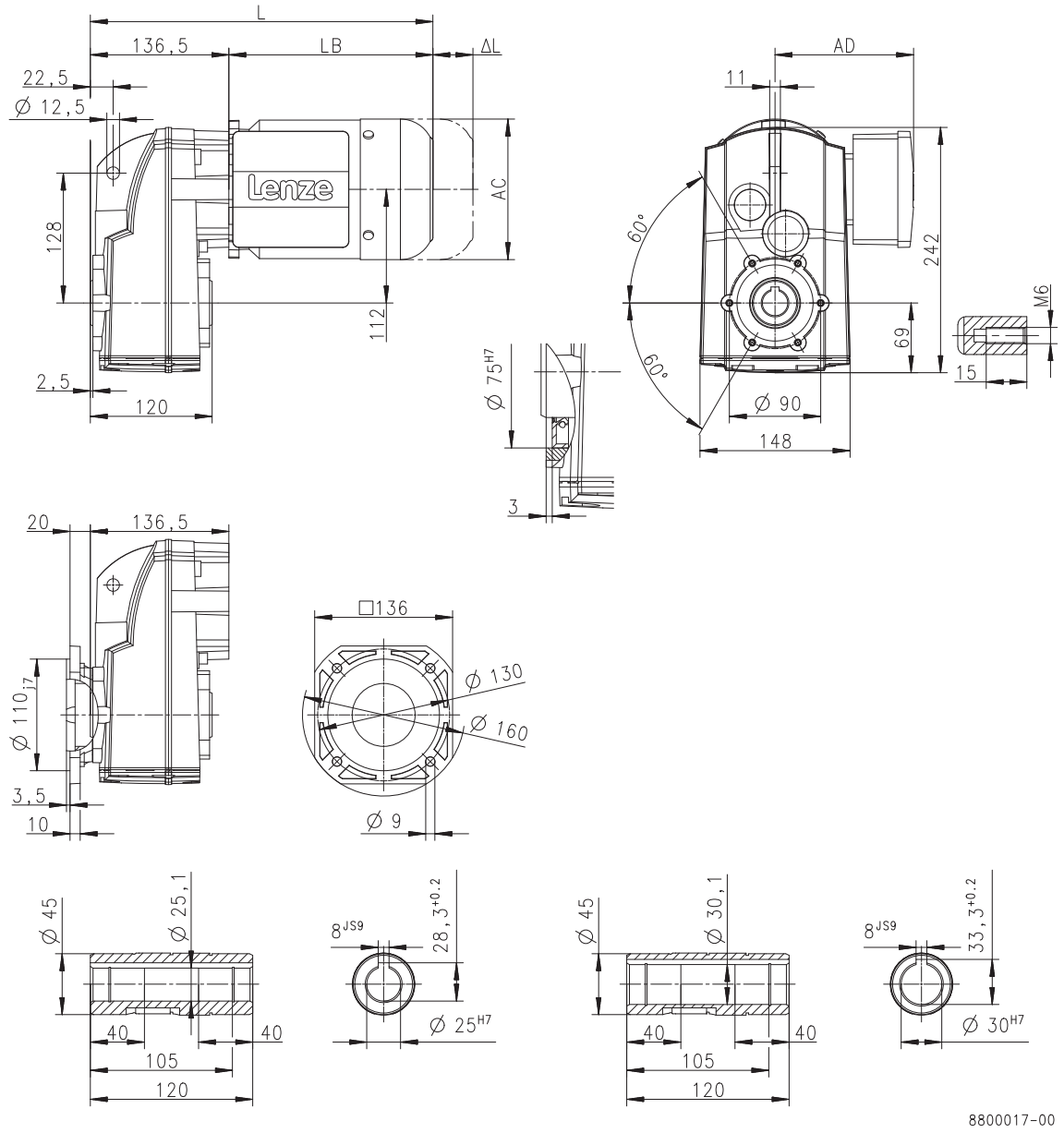

			MD□MA□□				
			063-12	063-32	063-42	071-32	071-42
Total length	L	[mm]	320			340	
Motor length	LB	[mm]	183			203	
Length of motor options	Δ L	[mm]	170			165	
Motor diameter	AC	[mm]	123			139	
Distance motor/connection	AD	[mm]	100			109	

L = length of the motor without built-on accessories
ΔL = additional length of the built-on accessories (longest type)

Dimensions, 4-pole motors

g500-S220

Dimensions with hollow shaft
Gearbox design: HDR, HCR, HCK

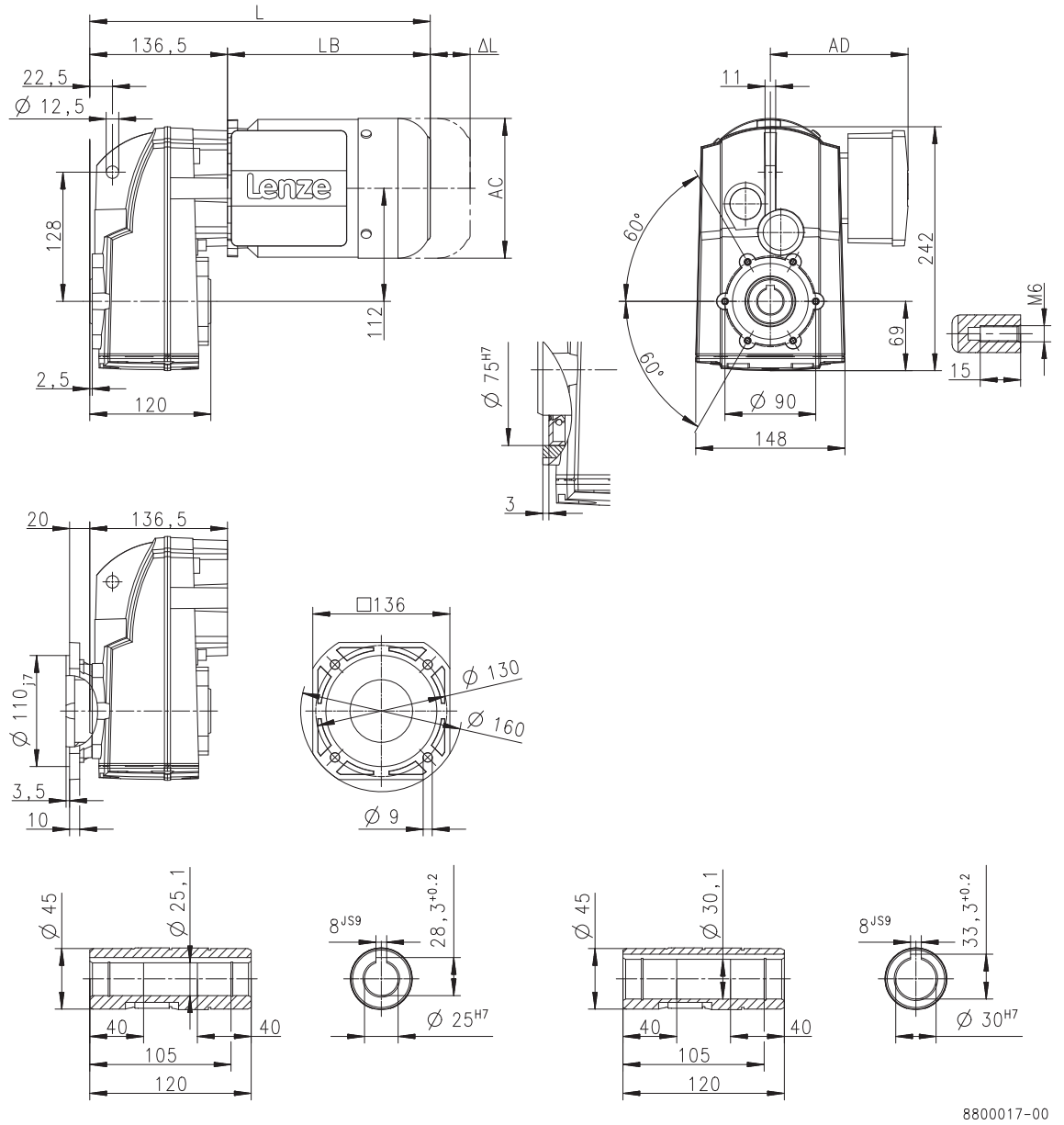

			m550				
			-P80/M4	-P90/M4	-P90/L4	-P100/M4	-P100/L4
Total length	L	[mm]	397	461		521	
Motor length	LB	[mm]	260	324		384	
Length of motor options	Δ L	[mm]	183	175		170	
Motor diameter	AC	[mm]	157	177		195	
Distance motor/connection	AD	[mm]	148	154		164	

L = length of the motor without built-on accessories
ΔL = additional length of the built-on accessories (longest type)

Dimensions, 4-pole motors

g500-S220

Dimensions with hollow shaft
Gearbox design: HBR

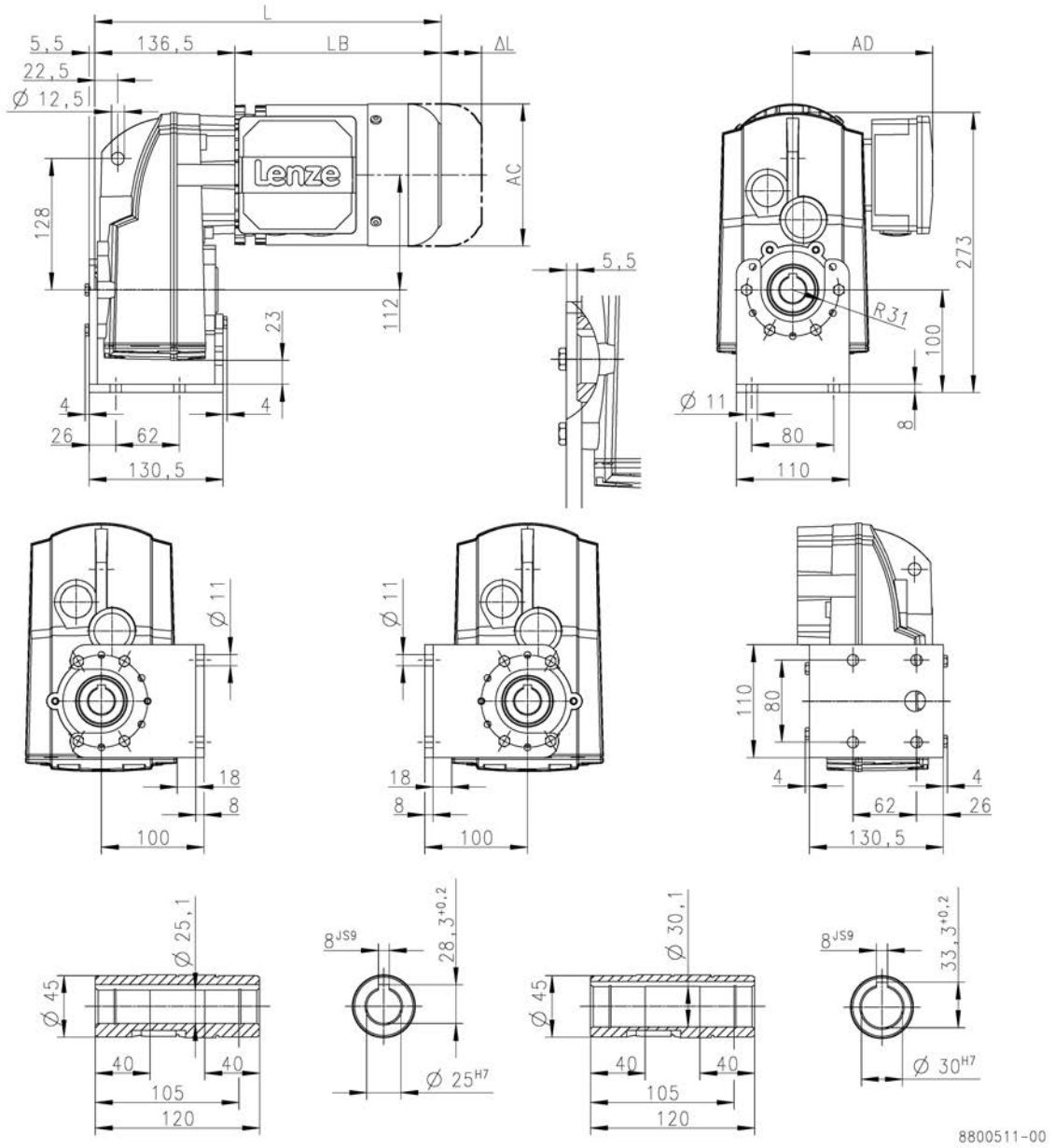

			MD□MA□□				
			063-12	063-32	063-42	071-32	071-42
Total length	L	[mm]	320			340	
Motor length	LB	[mm]	183			203	
Length of motor options	Δ L	[mm]	170			165	
Motor diameter	AC	[mm]	123			139	
Distance motor/connection	AD	[mm]	100			109	

L = length of the motor without built-on accessories
ΔL = additional length of the built-on accessories (longest type)

Dimensions, 4-pole motors

g500-S220

Dimensions with hollow shaft
Gearbox design: HBR

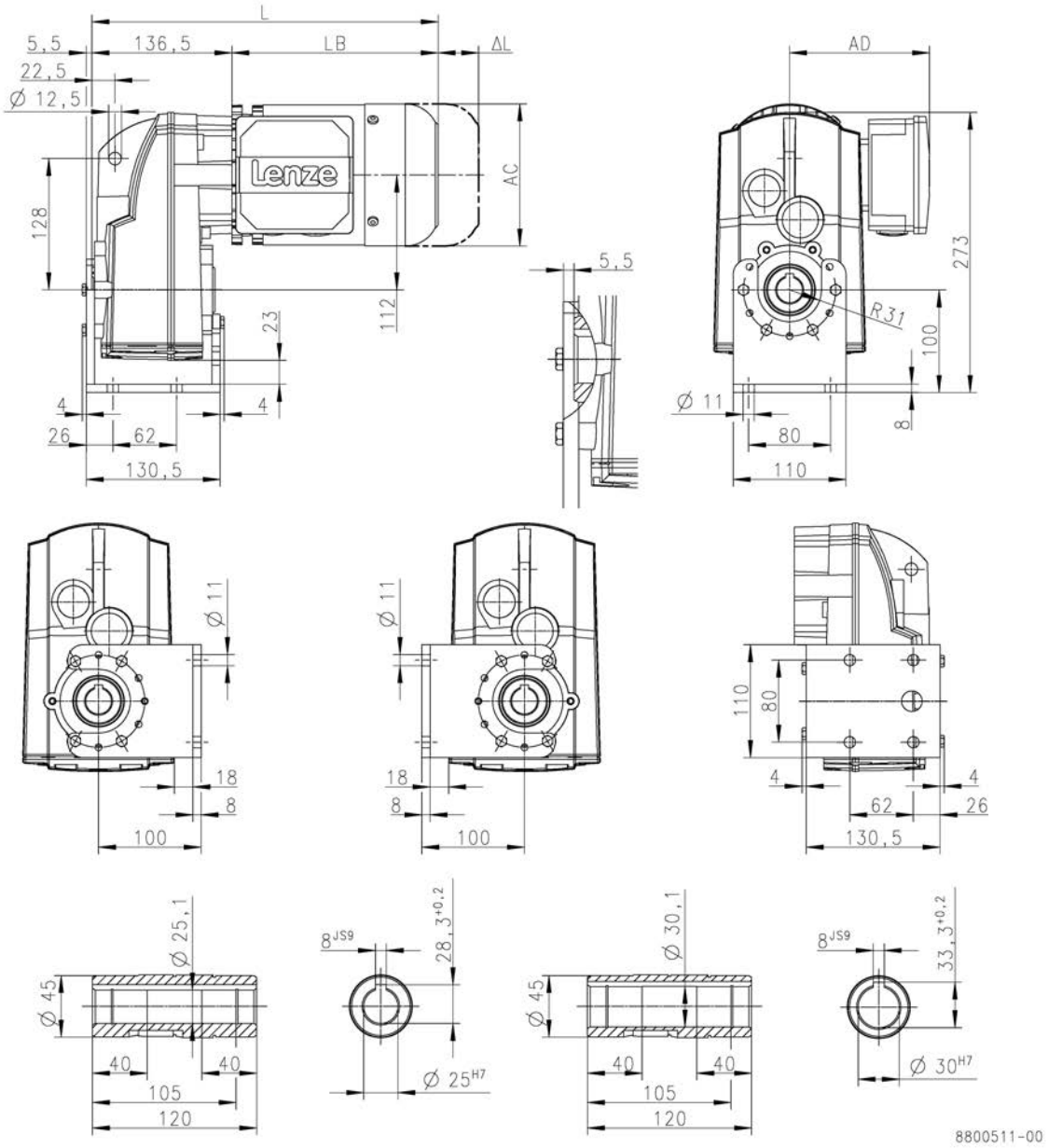

			m550				
			-P80/M4	-P90/M4	-P90/L4	-P100/M4	-P100/L4
Total length	L	[mm]	397	461		521	
Motor length	LB	[mm]	260	324		384	
Length of motor options	Δ L	[mm]	183	175		170	
Motor diameter	AC	[mm]	157	177		195	
Distance motor/connection	AD	[mm]	148	154		164	

L = length of the motor without built-on accessories
ΔL = additional length of the built-on accessories (longest type)

Dimensions, 4-pole motors

g500-S220

Dimensions hollow shaft with shrink disc
Gearbox design: SDR, SCR, SCK

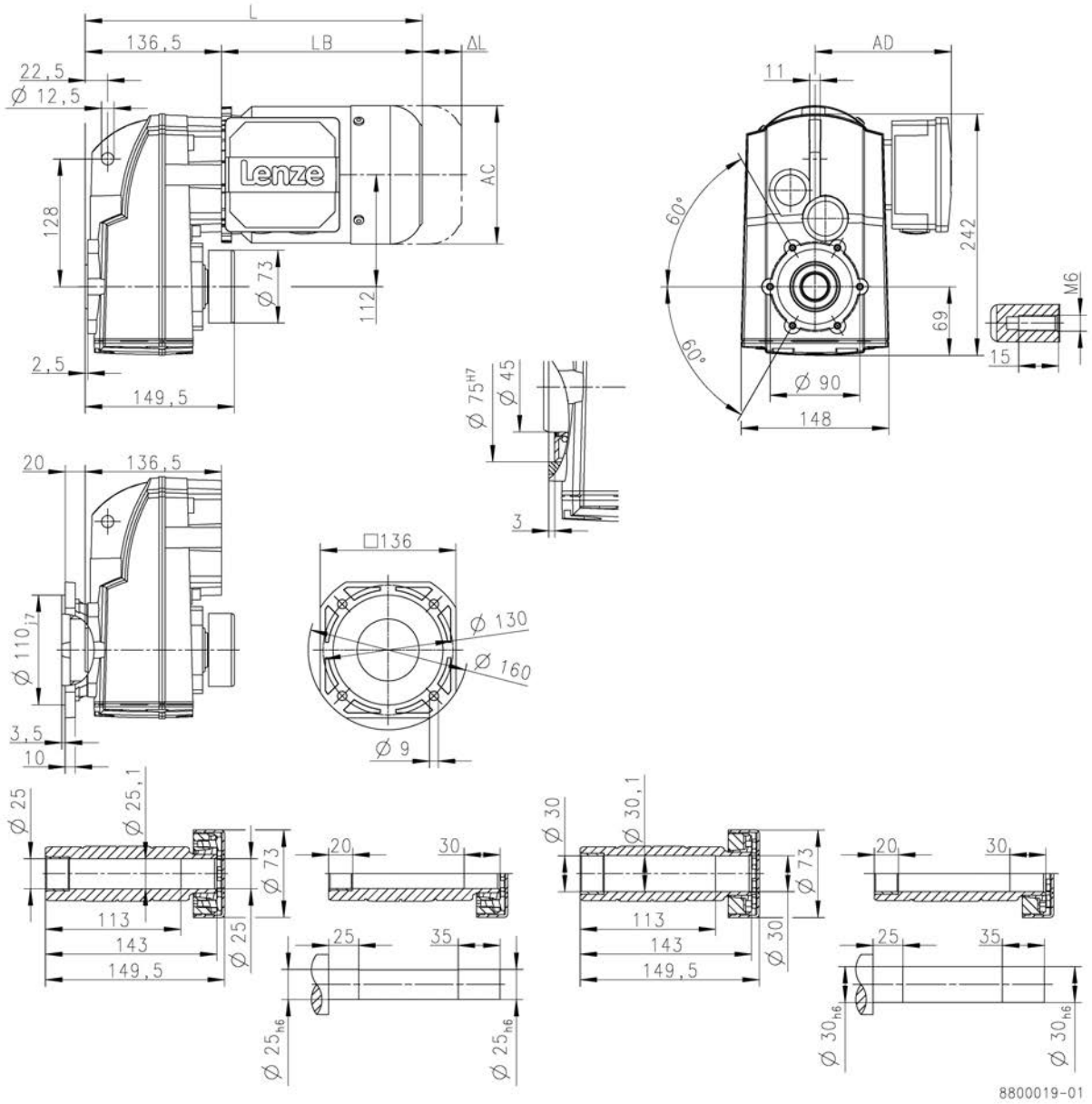

			MD□MA□□				
			063-12	063-32	063-42	071-32	071-42
Total length	L	[mm]	320			340	
Motor length	LB	[mm]	183			203	
Length of motor options	Δ L	[mm]	170			165	
Motor diameter	AC	[mm]	123			139	
Distance motor/connection	AD	[mm]	100			109	

L = length of the motor without built-on accessories
ΔL = additional length of the built-on accessories (longest type)

1 - Shrink disc dimensions

Dimensions, 4-pole motors

g500-S220

Dimensions hollow shaft with shrink disc
Gearbox design: SDR, SCR, SCK

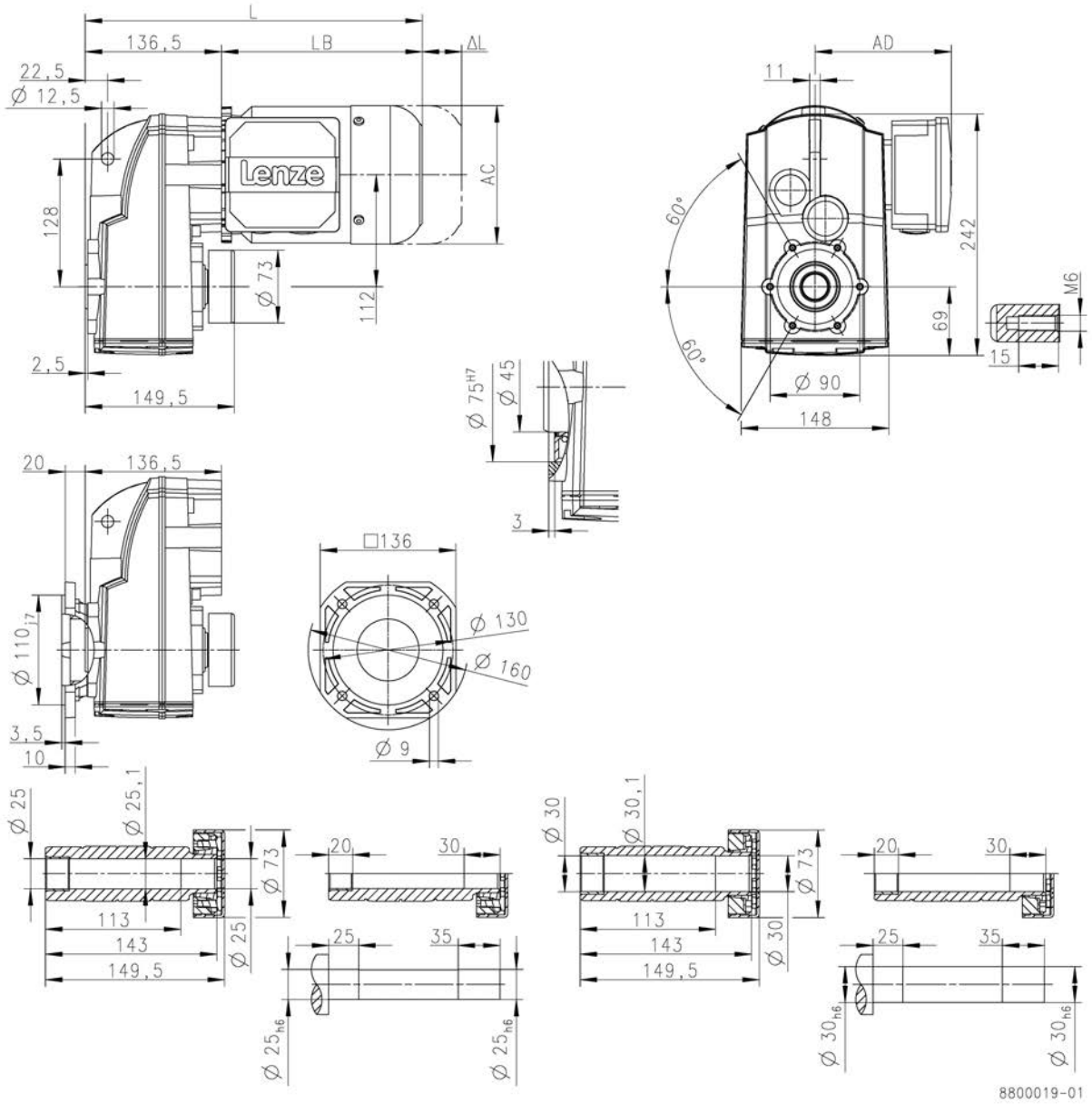

			m550				
			-P80/M4	-P90/M4	-P90/L4	-P100/M4	-P100/L4
Total length	L	[mm]	397	461		521	
Motor length	LB	[mm]	260	324		384	
Length of motor options	Δ L	[mm]	183	175		170	
Motor diameter	AC	[mm]	157	177		195	
Distance motor/connection	AD	[mm]	148	154		164	

L = length of the motor without built-on accessories
ΔL = additional length of the built-on accessories (with brake)

1 - Shrink disc dimensions

Dimensions, 4-pole motors

g500-S220

Dimensions with solid shaft
Gearbox design: VDR, VCR, VCK

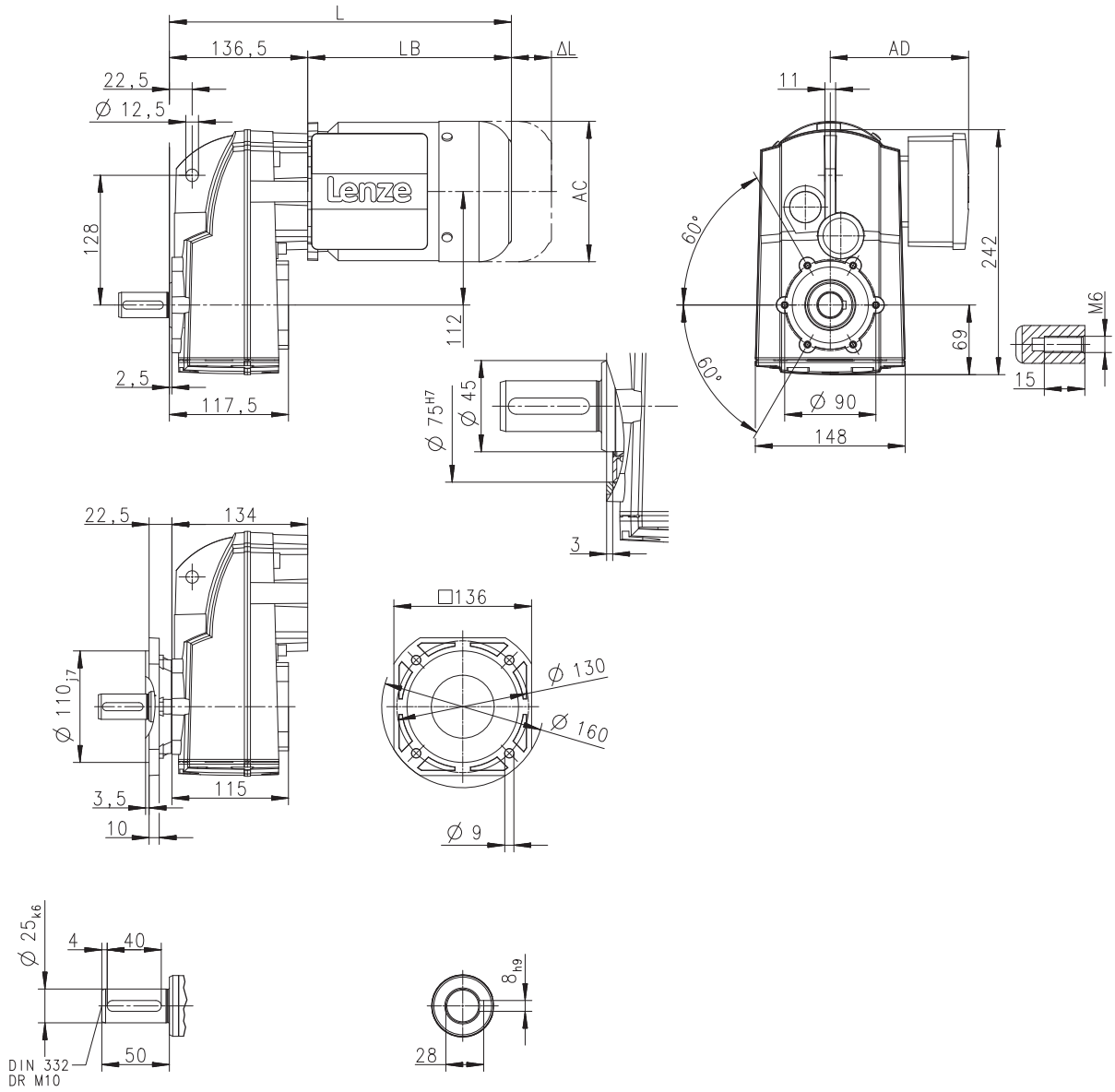

			MD□MA□□				
			063-12	063-32	063-42	071-32	071-42
Total length	L	[mm]	320			340	
Motor length	LB	[mm]	183			203	
Length of motor options	Δ L	[mm]	170			165	
Motor diameter	AC	[mm]	123			139	
Distance motor/connection	AD	[mm]	100			109	

L = length of the motor without built-on accessories
ΔL = additional length of the built-on accessories (longest type)

Dimensions, 4-pole motors

g500-S220

Dimensions with solid shaft
Gearbox design: VDR, VCR, VCK

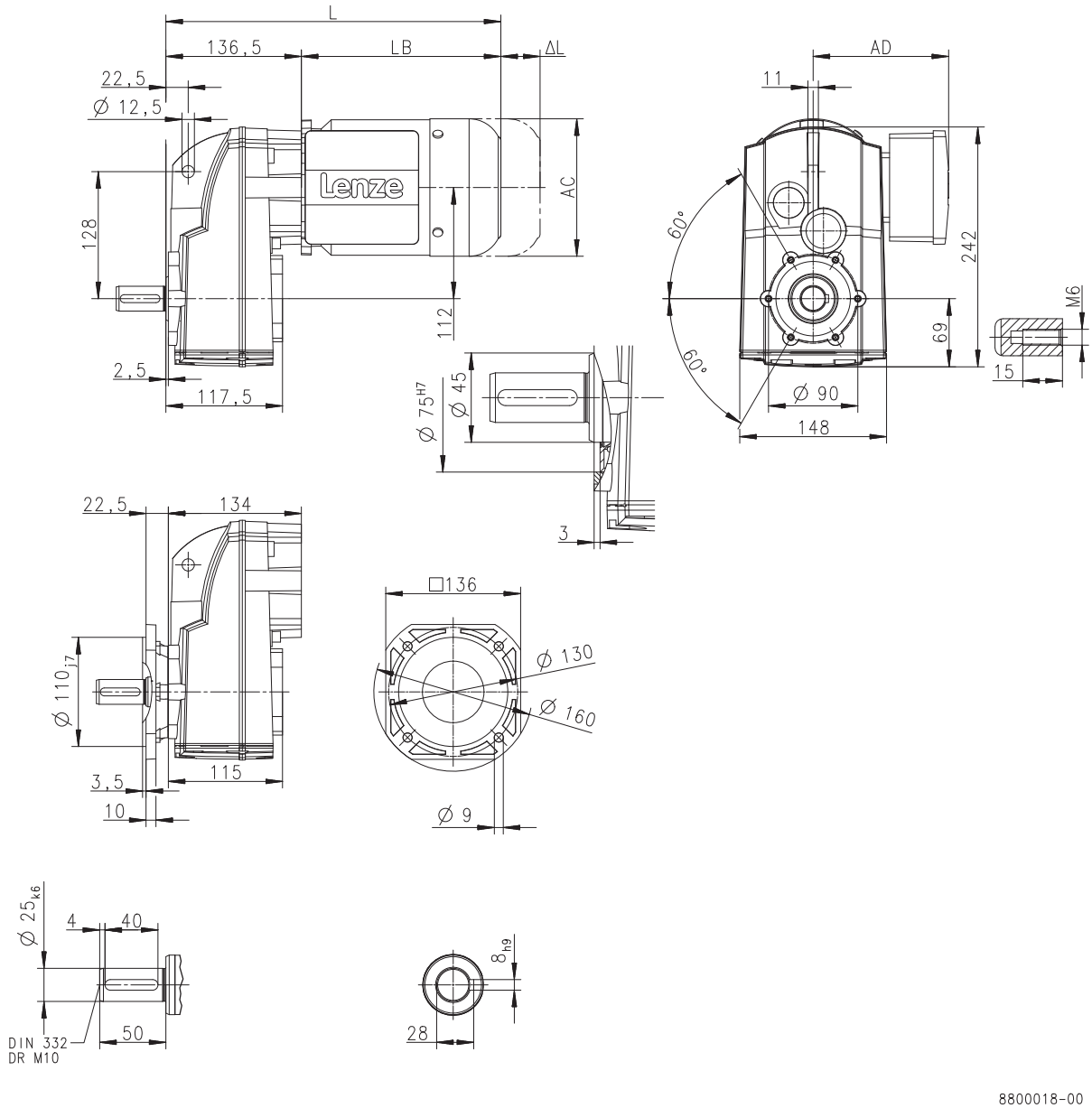

			m550				
			-P80/M4	-P90/M4	-P90/L4	-P100/M4	-P100/L4
Total length	L	[mm]	397	461		521	
Motor length	LB	[mm]	260	324		384	
Length of motor options	Δ L	[mm]	183	175		170	
Motor diameter	AC	[mm]	157	177		195	
Distance motor/connection	AD	[mm]	148	154		164	

L = length of the motor without built-on accessories
ΔL = additional length of the built-on accessories (longest type)

Dimensions, 4-pole motors

g500-S220

Dimensions with solid shaft
Gearbox design: VBR

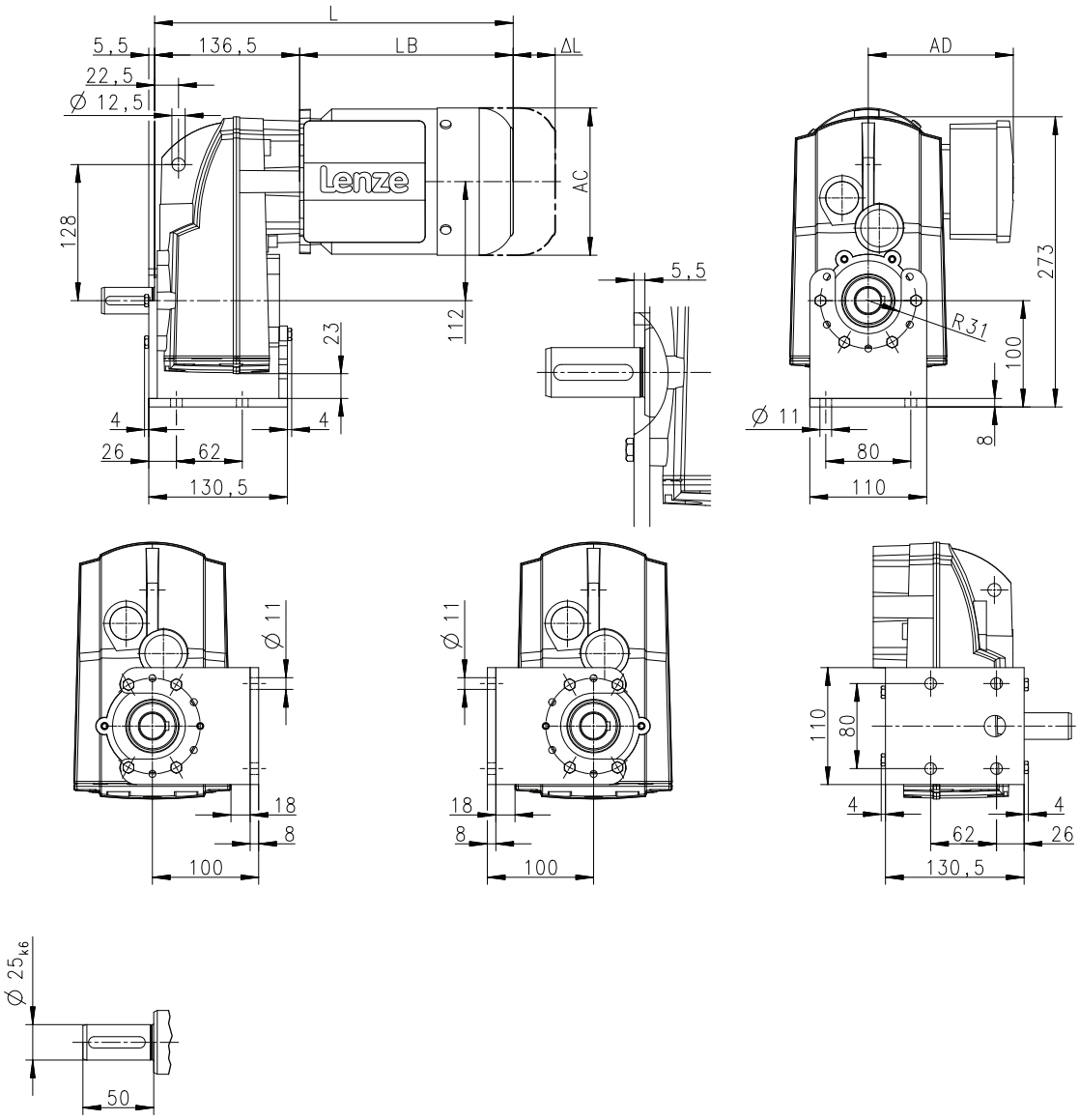

			MD□MA□□				
			063-12	063-32	063-42	071-32	071-42
Total length	L	[mm]	320			340	
Motor length	LB	[mm]	183			203	
Length of motor options	Δ L	[mm]	170			165	
Motor diameter	AC	[mm]	123			139	
Distance motor/connection	AD	[mm]	100			109	

L = length of the motor without built-on accessories
ΔL = additional length of the built-on accessories (longest type)

Dimensions, 4-pole motors

g500-S220

Dimensions with solid shaft
Gearbox design: VBR

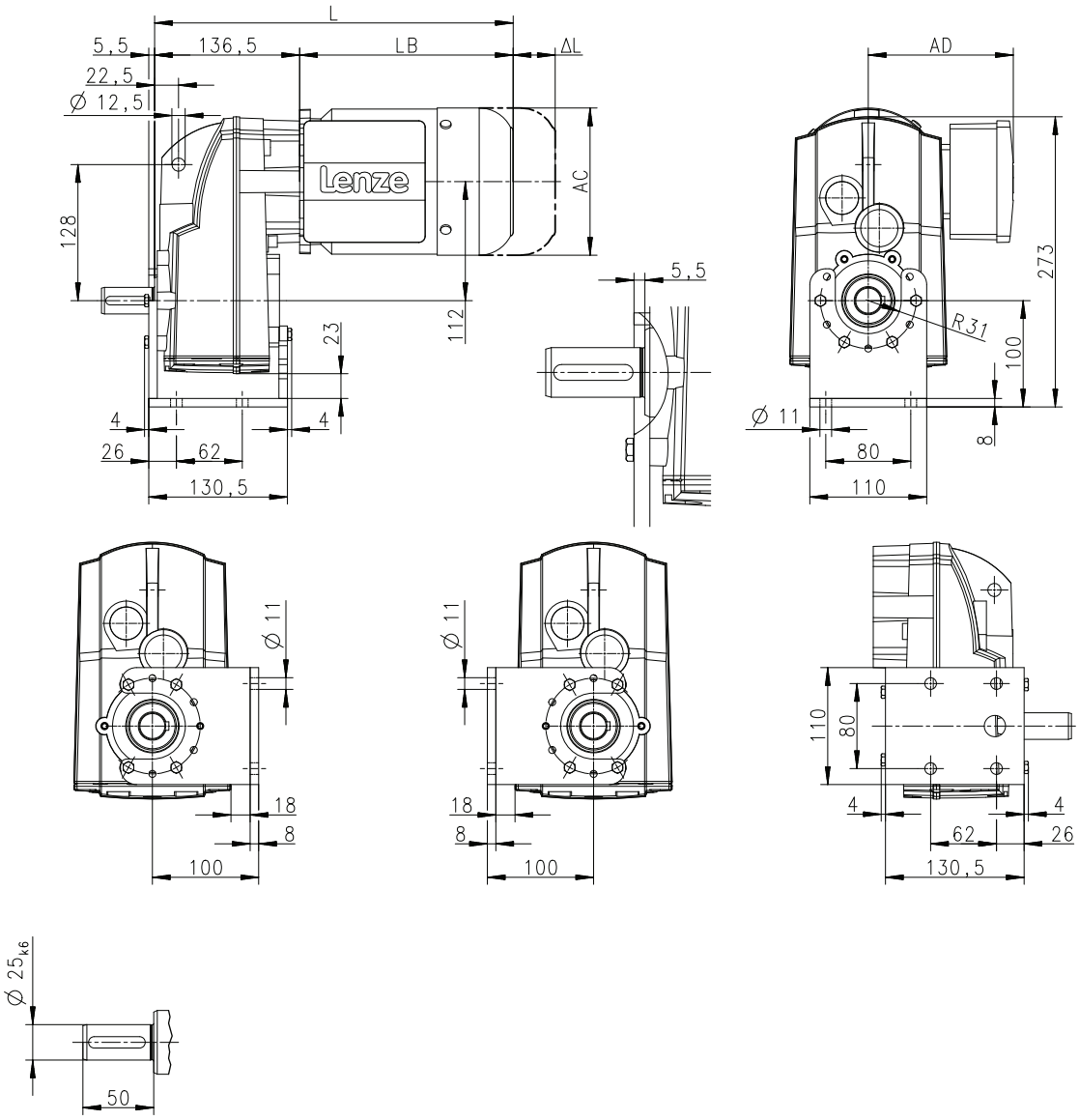

			m550				
			-P80/M4	-P90/M4	-P90/L4	-P100/M4	-P100/L4
Total length	L	[mm]	397	461		521	
Motor length	LB	[mm]	260	324		384	
Length of motor options	Δ L	[mm]	183	175		170	
Motor diameter	AC	[mm]	157	177		195	
Distance motor/connection	AD	[mm]	148	154		164	

L = length of the motor without built-on accessories
ΔL = additional length of the built-on accessories (longest type)

Dimensions, 4-pole motors

g500-S400

Dimensions with hollow shaft
Gearbox design: HDR, HCR, HCK

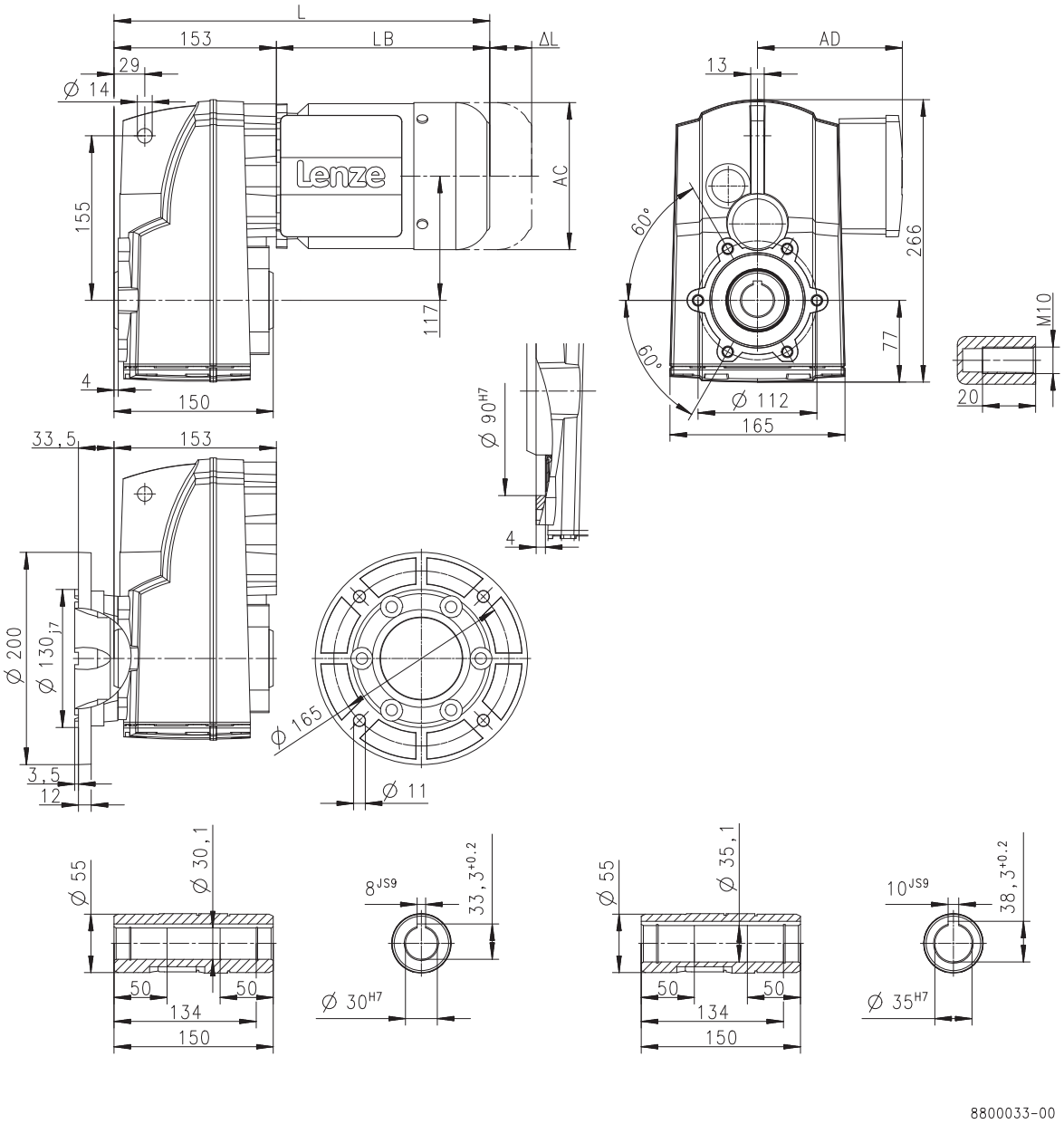

			MD□MA□□				
			063-12	063-32	063-42	071-32	071-42
Total length	L	[mm]	336			356	
Motor length	LB	[mm]	183			203	
Length of motor options	Δ L	[mm]	170			165	
Motor diameter	AC	[mm]	123			139	
Distance motor/connection	AD	[mm]	100			109	

L = length of the motor without built-on accessories
ΔL = additional length of the built-on accessories (longest type)

Dimensions, 4-pole motors

g500-S400

Dimensions with hollow shaft
Gearbox design: HDR, HCR, HCK

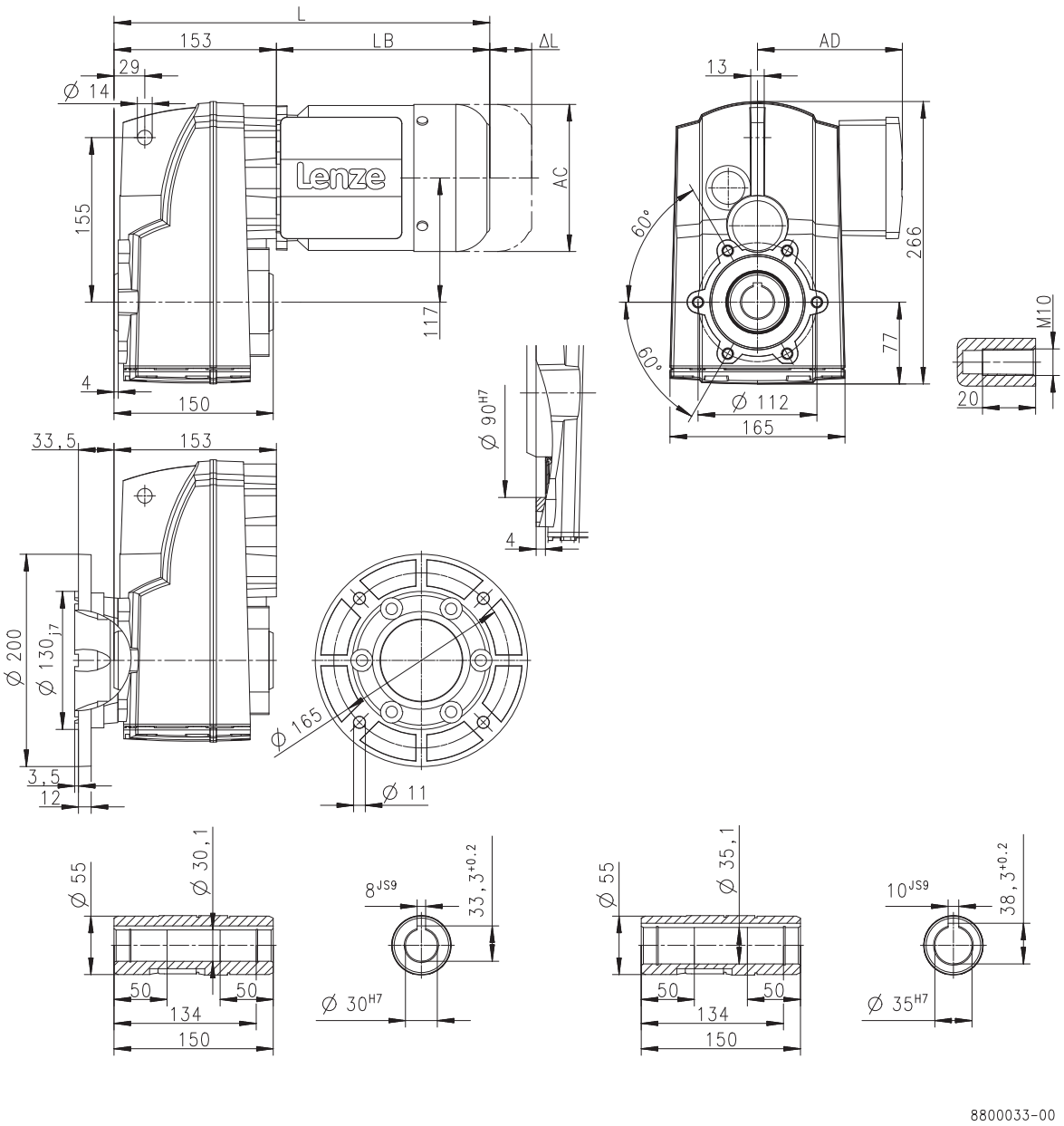

			m550					
			-P80/M4	-P90/M4	-P90/L4	-P100/M4	-P100/L4	-P112/M4
Total length	L	[mm]	413	477		537		544
Motor length	LB	[mm]	260	324		384		391
Length of motor options	Δ L	[mm]	183	175		170		183
Motor diameter	AC	[mm]	157	177		195		219
Distance motor/connection	AD	[mm]	148	154		164		171

L = length of the motor without built-on accessories
ΔL = additional length of the built-on accessories (longest type)

Dimensions, 4-pole motors

g500-S400

Dimensions with hollow shaft
Gearbox design: HBR

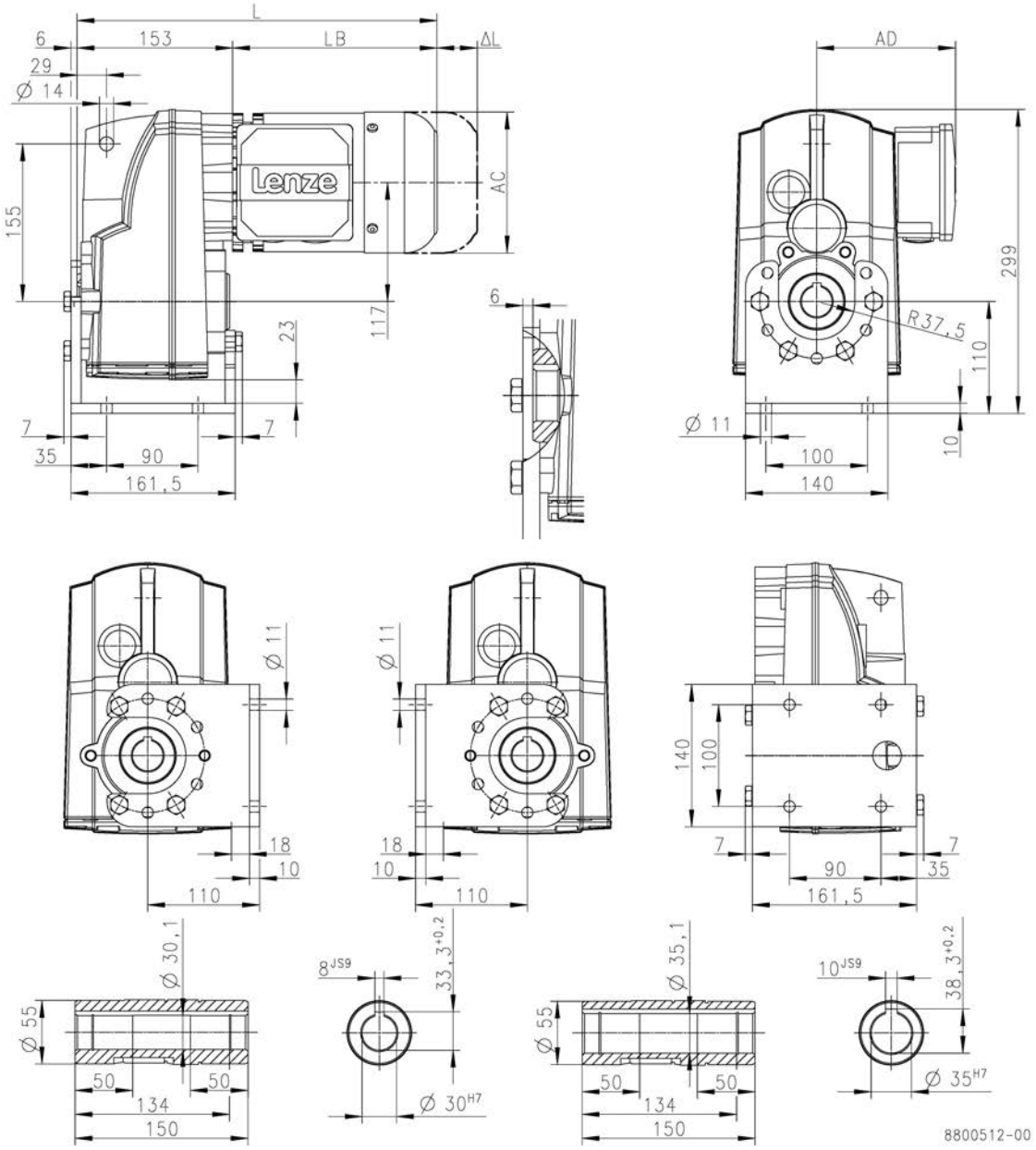

			MD□MA□□				
			063-12	063-32	063-42	071-32	071-42
Total length	L	[mm]	336			356	
Motor length	LB	[mm]	183			203	
Length of motor options	Δ L	[mm]	170			165	
Motor diameter	AC	[mm]	123			139	
Distance motor/connection	AD	[mm]	100			109	

L = length of the motor without built-on accessories
ΔL = additional length of the built-on accessories (longest type)

Dimensions, 4-pole motors

g500-S400

Dimensions with hollow shaft
Gearbox design: HBR

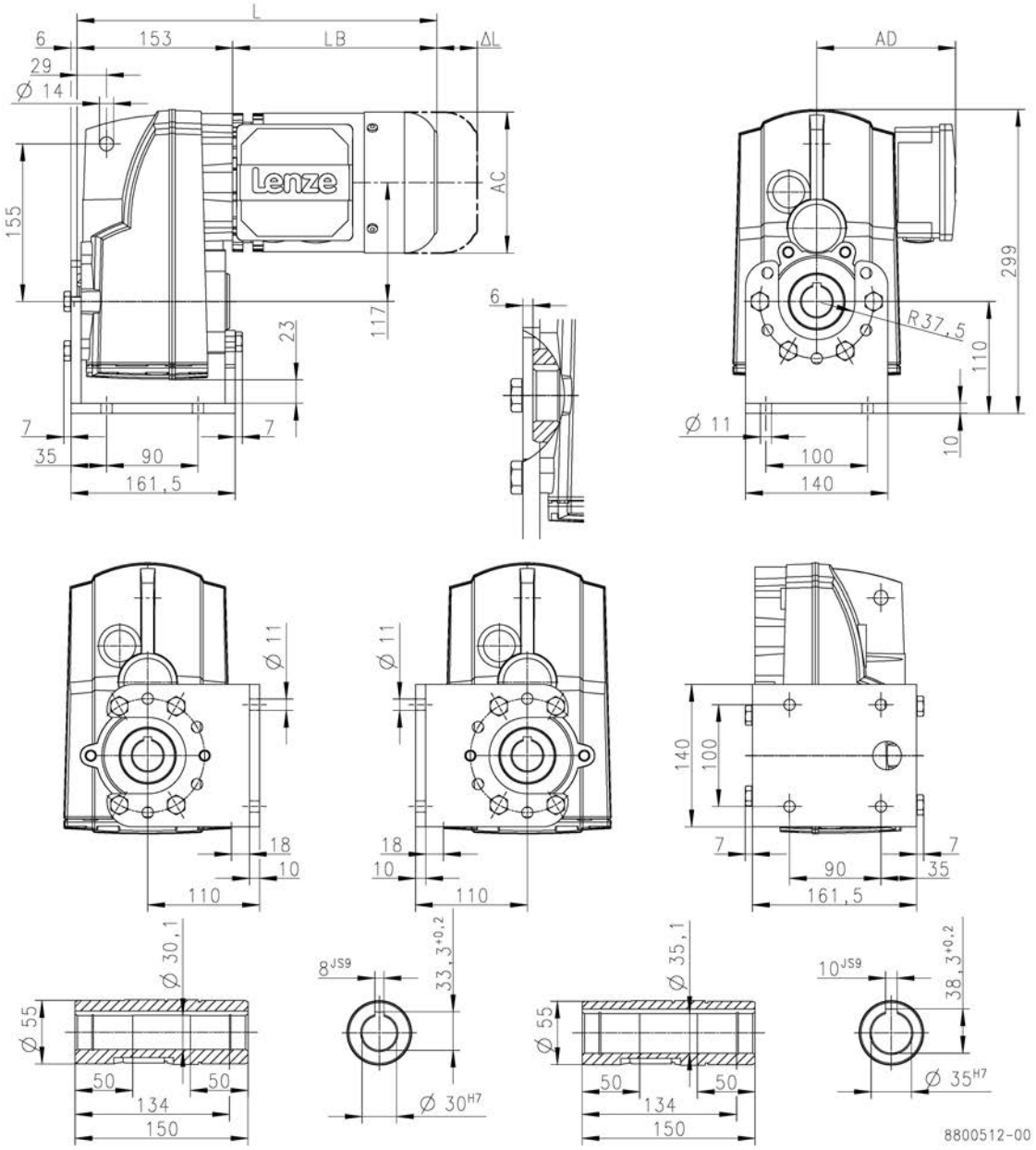

			m550					
			-P80/M4	-P90/M4	-P90/L4	-P100/M4	-P100/L4	-P112/M4
Total length	L	[mm]	413	477		537		544
Motor length	LB	[mm]	260	324		384		391
Length of motor options	Δ L	[mm]	183	175		170		183
Motor diameter	AC	[mm]	157	177		195		219
Distance motor/connection	AD	[mm]	148	154		164		171

L = length of the motor without built-on accessories
ΔL = additional length of the built-on accessories (longest type)

Dimensions, 4-pole motors

g500-S400

Dimensions hollow shaft with shrink disc
Gearbox design: SDR, SCR, SCK

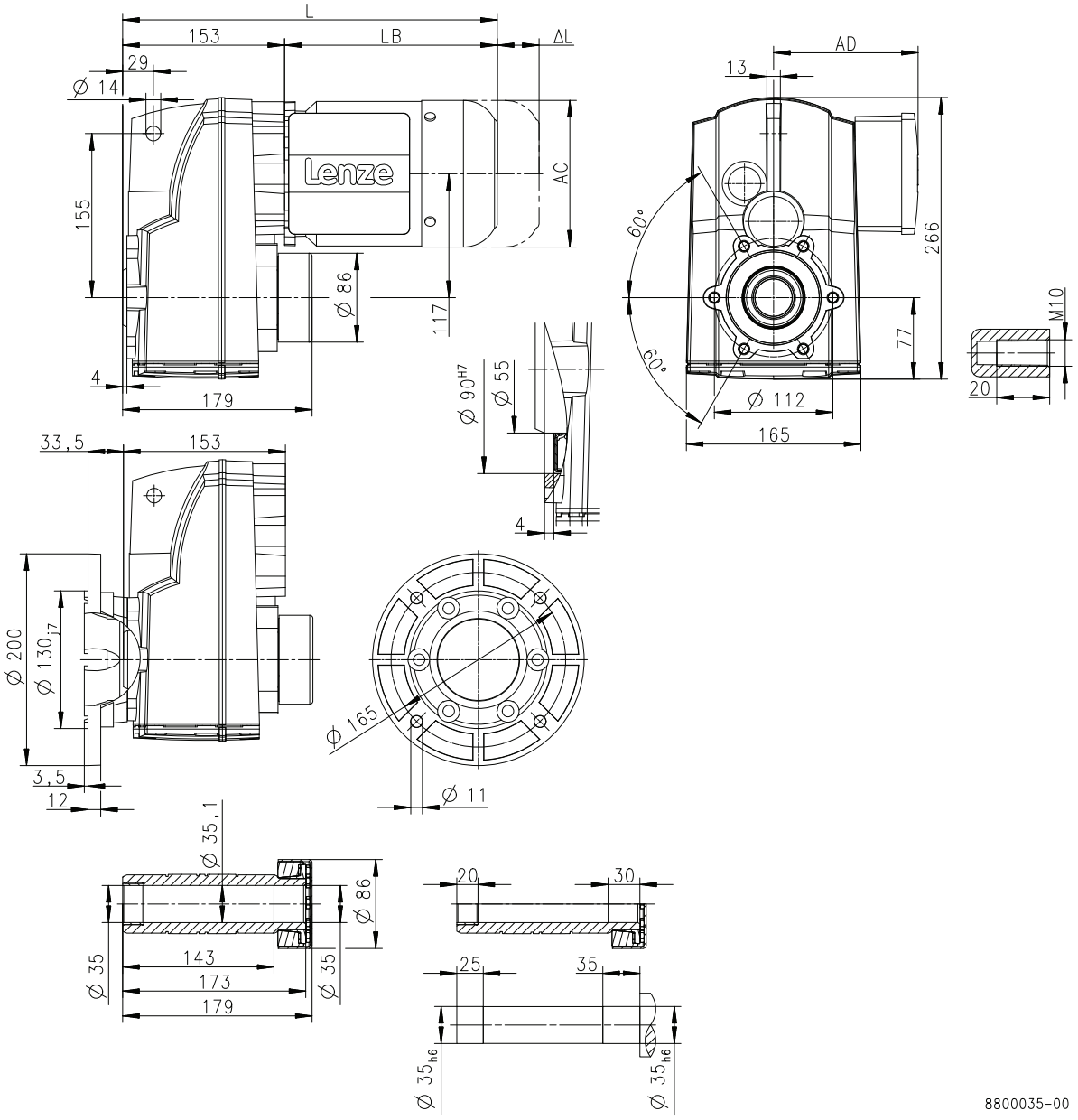

			MD□MA□□				
			063-12	063-32	063-42	071-32	071-42
Total length	L	[mm]	336			356	
Motor length	LB	[mm]	183			203	
Length of motor options	Δ L	[mm]	170			165	
Motor diameter	AC	[mm]	123			139	
Distance motor/connection	AD	[mm]	100			109	

L = length of the motor without built-on accessories
ΔL = additional length of the built-on accessories (longest type)

1 - Shrink disc dimensions

Dimensions, 4-pole motors

g500-S400

Dimensions hollow shaft with shrink disc
Gearbox design: SDR, SCR, SCK

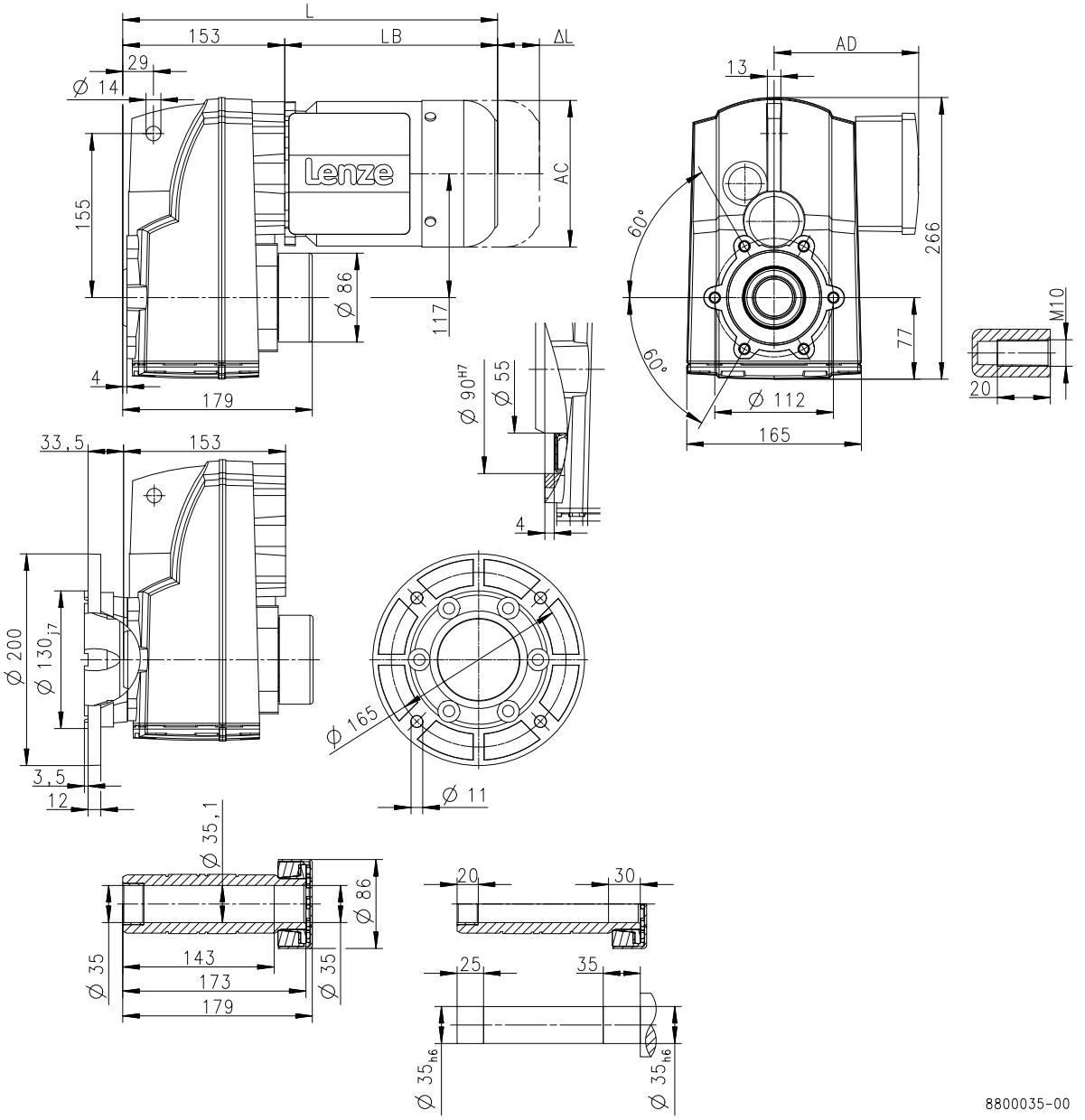

			m550					
			-P80/M4	-P90/M4	-P90/L4	-P100/M4	-P100/L4	-P112/M4
Total length	L	[mm]	413	477		537		544
Motor length	LB	[mm]	260	324		384		391
Length of motor options	Δ L	[mm]	183	175		170		183
Motor diameter	AC	[mm]	157	177		195		219
Distance motor/connection	AD	[mm]	148	154		164		171

L = length of the motor without built-on accessories
ΔL = additional length of the built-on accessories (longest type)

1 - Shrink disc dimensions

Dimensions, 4-pole motors

g500-S400

Dimensions with solid shaft
Gearbox design: VDR, VCR, VCK

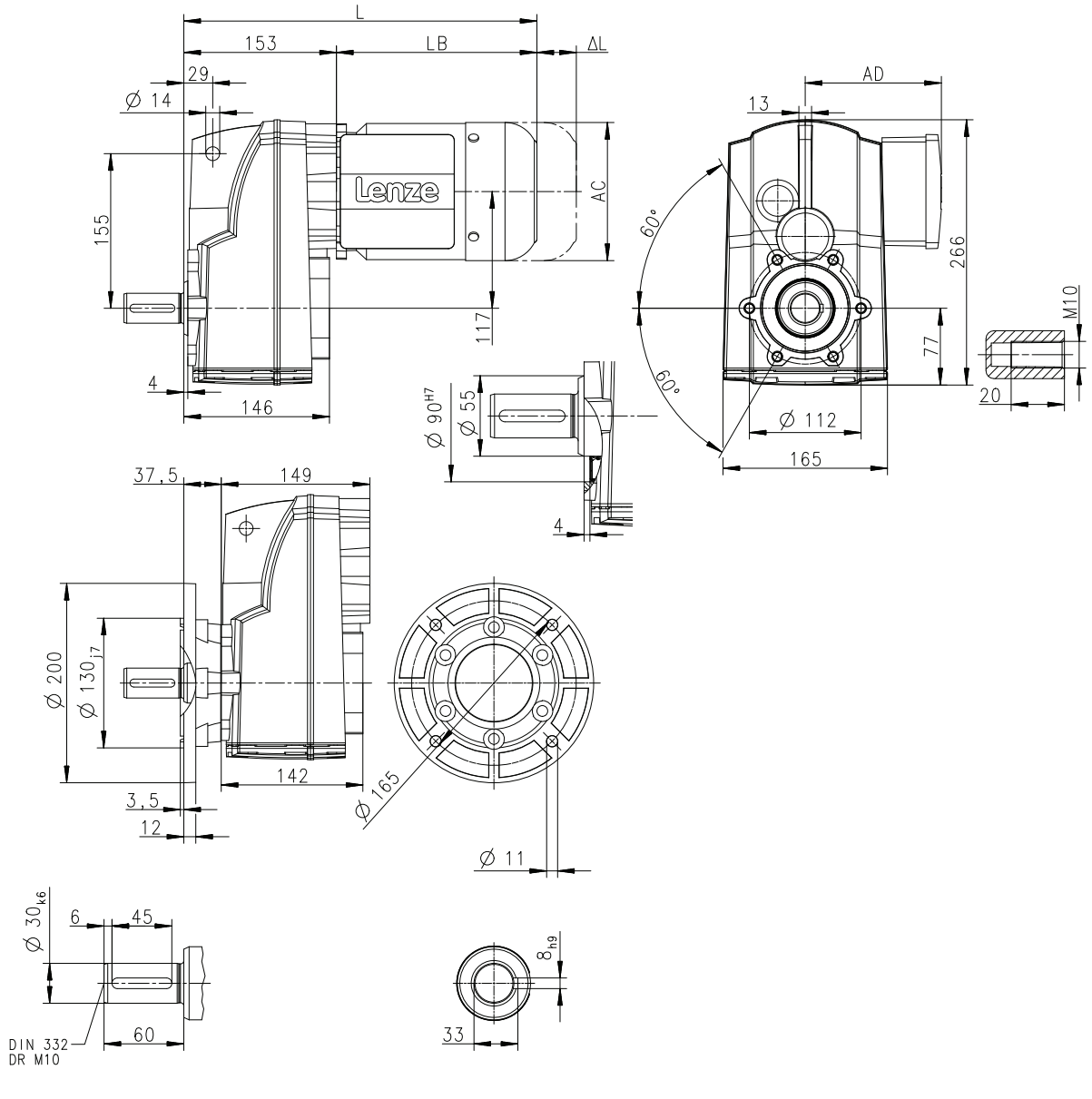

			MD□MA□□				
			063-12	063-32	063-42	071-32	071-42
Total length	L	[mm]	336			356	
Motor length	LB	[mm]	183			203	
Length of motor options	Δ L	[mm]	170			165	
Motor diameter	AC	[mm]	123			139	
Distance motor/connection	AD	[mm]	100			109	

L = length of the motor without built-on accessories
ΔL = additional length of the built-on accessories (longest type)

Dimensions, 4-pole motors

g500-S400

Dimensions with solid shaft
Gearbox design: VDR, VCR, VCK

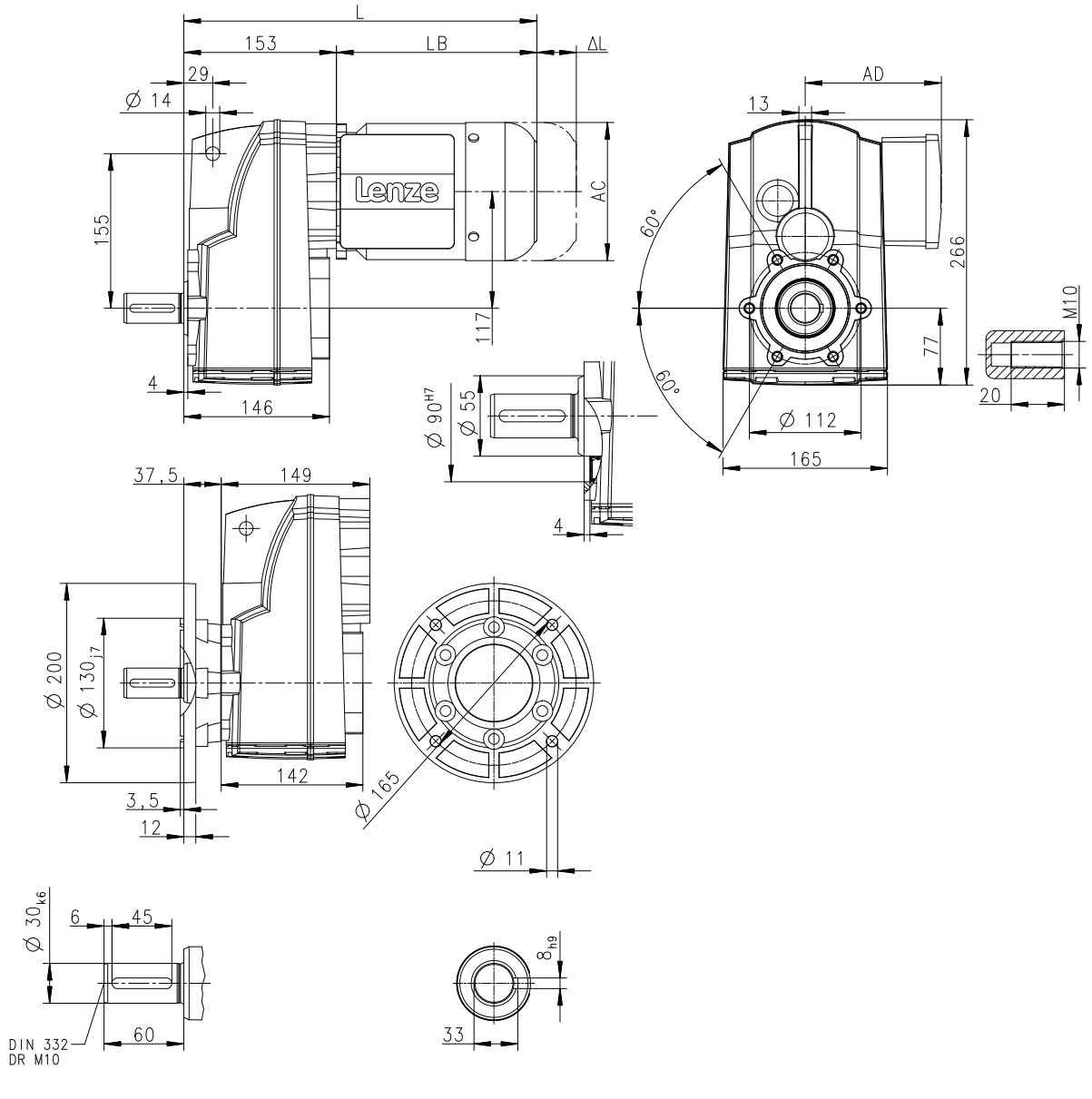

			m550					
			-P80/M4	-P90/M4	-P90/L4	-P100/M4	-P100/L4	-P112/M4
Total length	L	[mm]	413	477		537		544
Motor length	LB	[mm]	260	324		384		391
Length of motor options	Δ L	[mm]	183	175		170		183
Motor diameter	AC	[mm]	157	177		195		219
Distance motor/connection	AD	[mm]	148	154		164		171

L = length of the motor without built-on accessories
ΔL = additional length of the built-on accessories (longest type)

Dimensions, 4-pole motors

g500-S400

Dimensions with solid shaft
Gearbox design: VBR

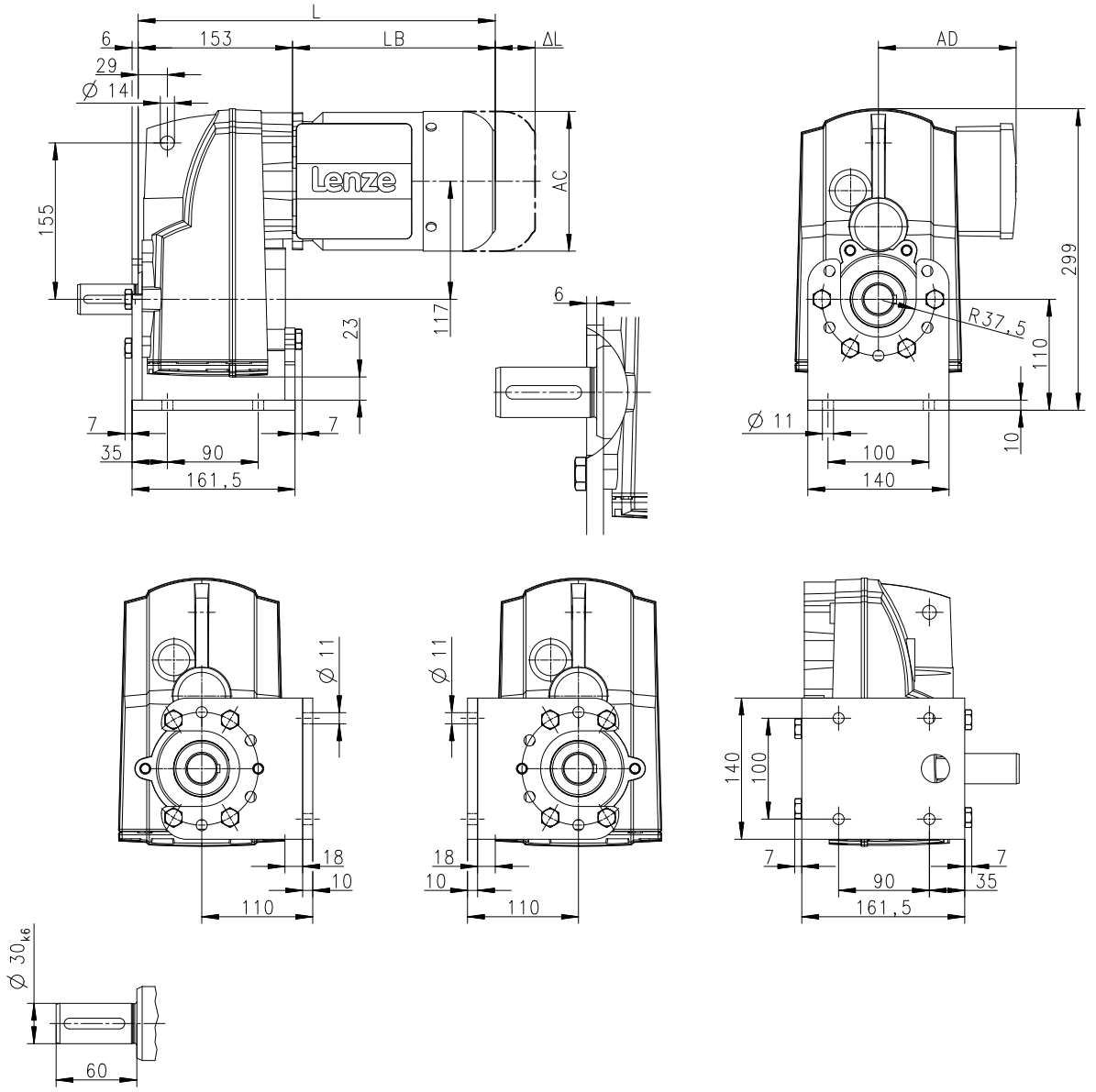

			MD□MA□□				
			063-12	063-32	063-42	071-32	071-42
Total length	L	[mm]	336			356	
Motor length	LB	[mm]	183			203	
Length of motor options	Δ L	[mm]	170			165	
Motor diameter	AC	[mm]	123			139	
Distance motor/connection	AD	[mm]	100			109	

L = length of the motor without built-on accessories
ΔL = additional length of the built-on accessories (longest type)

Dimensions, 4-pole motors

g500-S400

Dimensions with solid shaft
Gearbox design: VBR

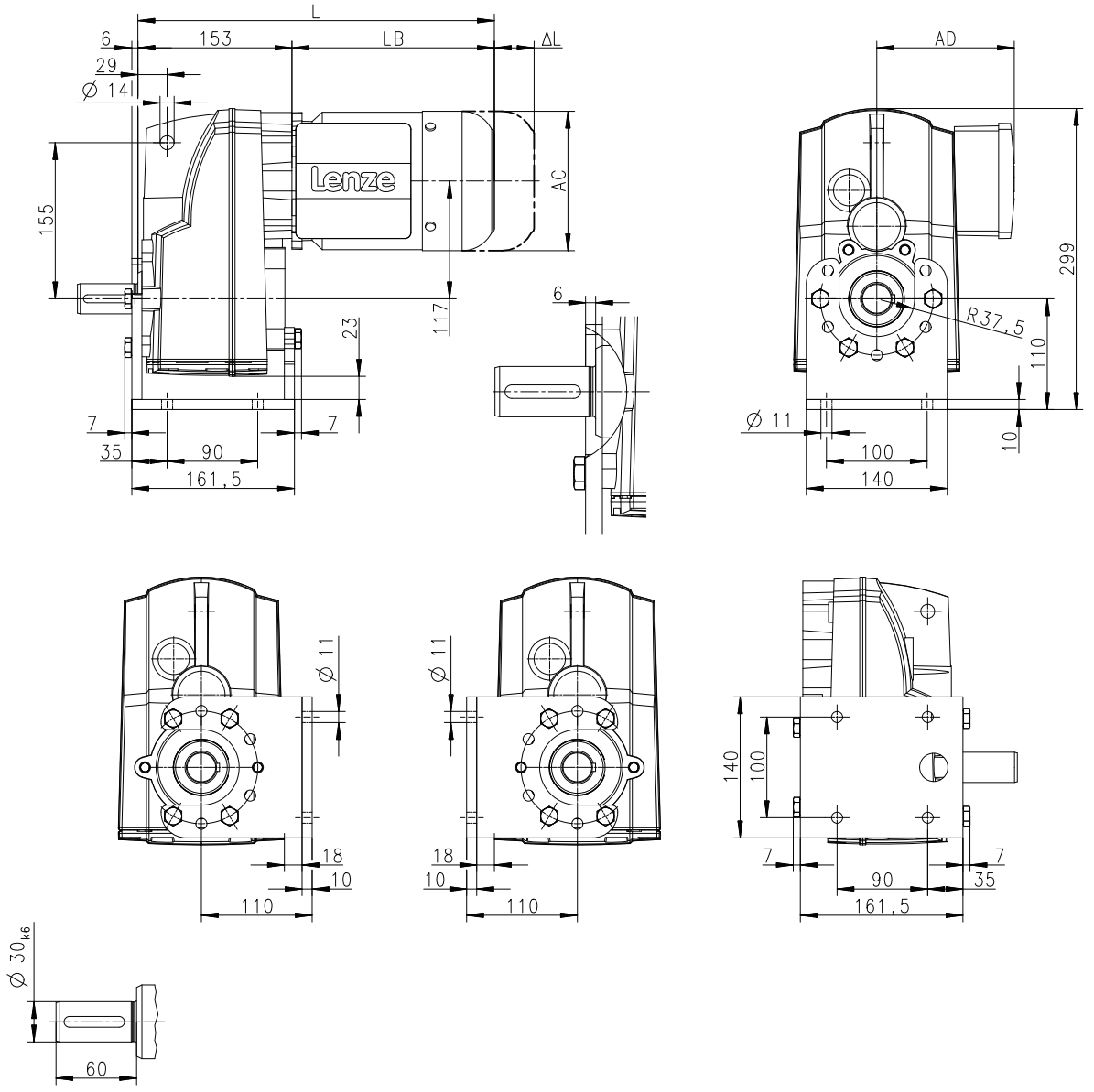

			m550					
			-P80/M4	-P90/M4	-P90/L4	-P100/M4	-P100/L4	-P112/M4
Total length	L	[mm]	413	477		537		544
Motor length	LB	[mm]	260	324		384		391
Length of motor options	Δ L	[mm]	183	175		170		183
Motor diameter	AC	[mm]	157	177		195		219
Distance motor/connection	AD	[mm]	148	154		164		171

L = length of the motor without built-on accessories
ΔL = additional length of the built-on accessories (longest type)

Dimensions, 4-pole motors

g500-S660

Dimensions with hollow shaft
Gearbox design: HDR, HCR, HCK

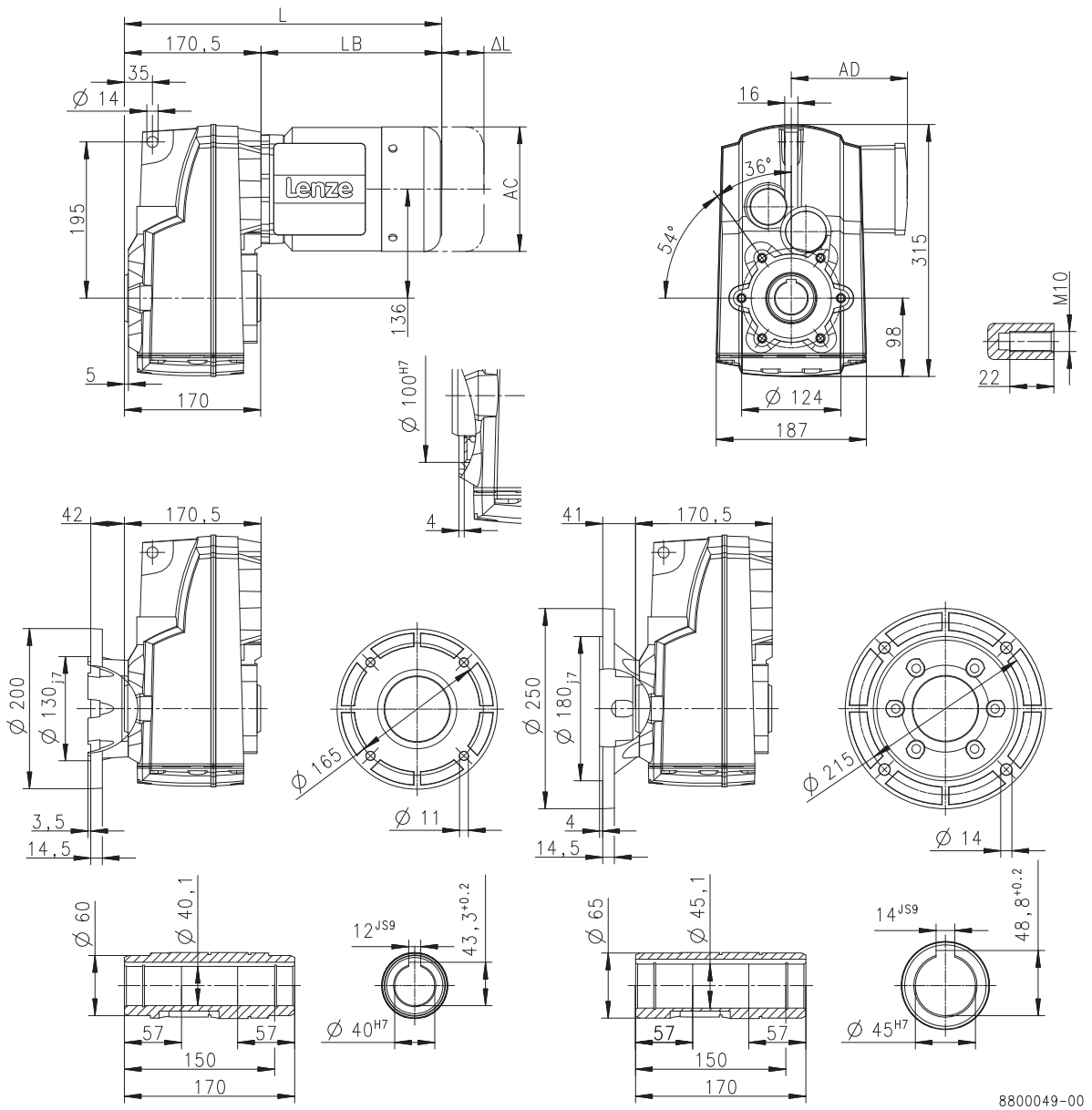

			MD□MA□□				
			063-12	063-32	063-42	071-32	071-42
Total length	L	[mm]	354			374	
Motor length	LB	[mm]	183			203	
Length of motor options	Δ L	[mm]	170			165	
Motor diameter	AC	[mm]	123			139	
Distance motor/connection	AD	[mm]	100			109	

L = length of the motor without built-on accessories
ΔL = additional length of the built-on accessories (longest type)

Dimensions, 4-pole motors

g500-S660

Dimensions with hollow shaft
Gearbox design: HDR, HCR, HCK

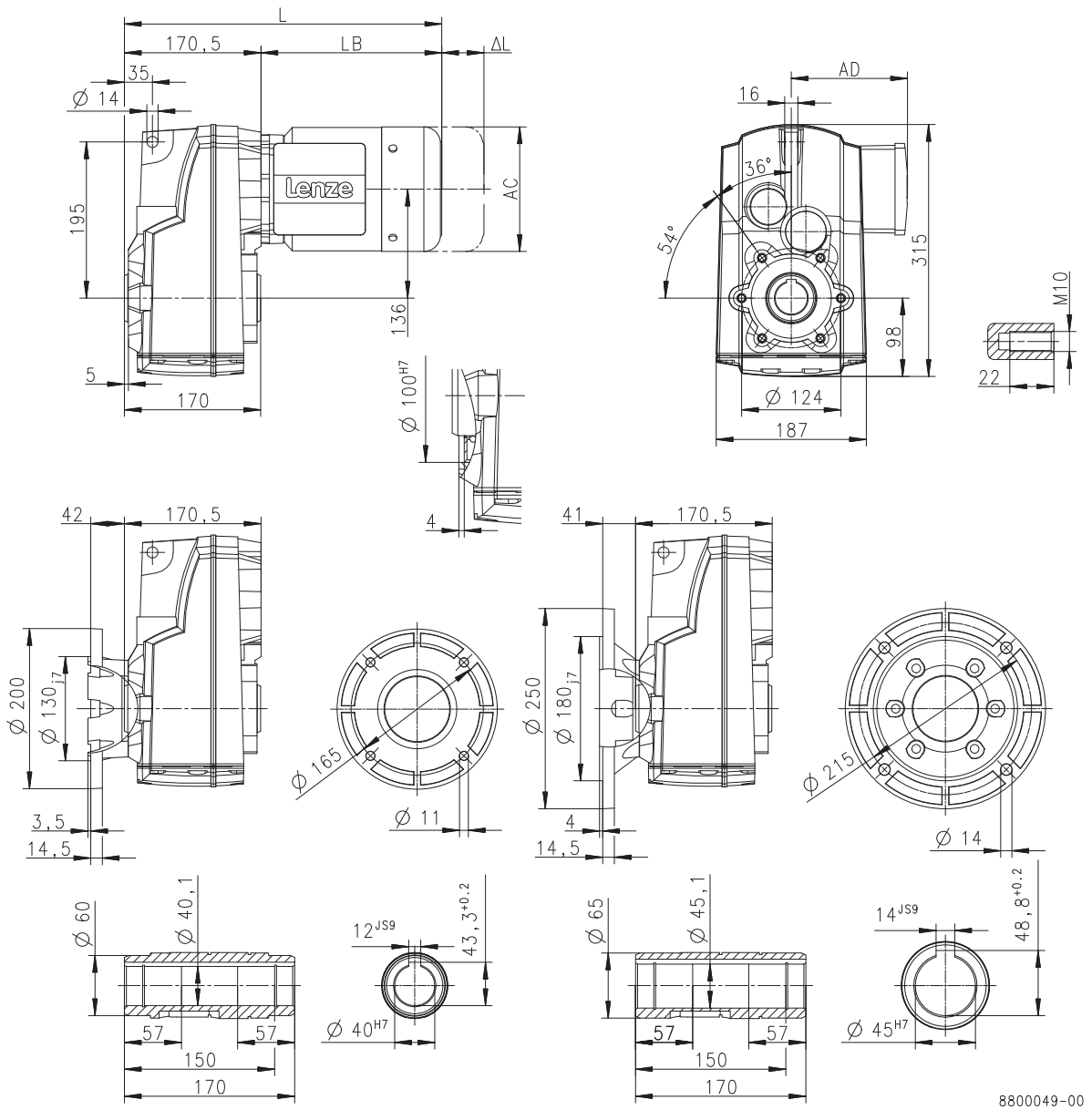

			m550							
			-P80/M4	-P90/M4	-P90/L4	-P100/M4	-P100/L4	-P112/M4	-P132/M4	-P132/L4
Total length	L	[mm]	431	495		555		562	629	
Motor length	LB	[mm]	260	324		384		391	458	
Length of motor options	Δ L	[mm]	183	175		170		183	201	
Motor diameter	AC	[mm]	157	177		195		219	261	
Distance motor/connection	AD	[mm]	148	154		164		171	182	

L = length of the motor without built-on accessories
ΔL = additional length of the built-on accessories (longest type)

Dimensions, 4-pole motors

g500-S660

Dimensions with hollow shaft
Gearbox design: HBR

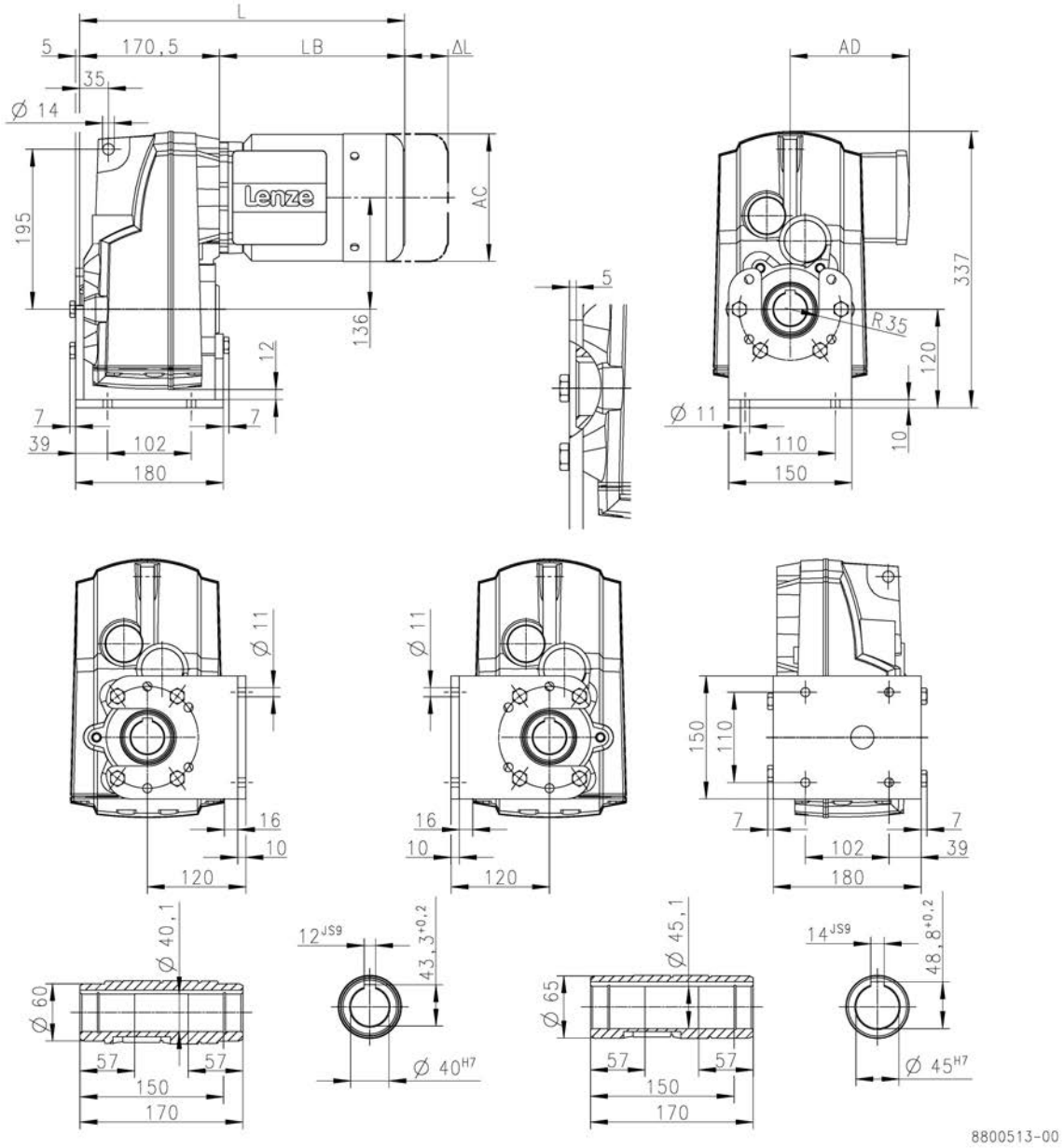

			MD□MA□□				
			063-12	063-32	063-42	071-32	071-42
Total length	L	[mm]	354			374	
Motor length	LB	[mm]	183			203	
Length of motor options	Δ L	[mm]	170			165	
Motor diameter	AC	[mm]	123			139	
Distance motor/connection	AD	[mm]	100			109	

L = length of the motor without built-on accessories
ΔL = additional length of the built-on accessories (longest type)

Dimensions, 4-pole motors

g500-S660

Dimensions with hollow shaft
Gearbox design: HBR

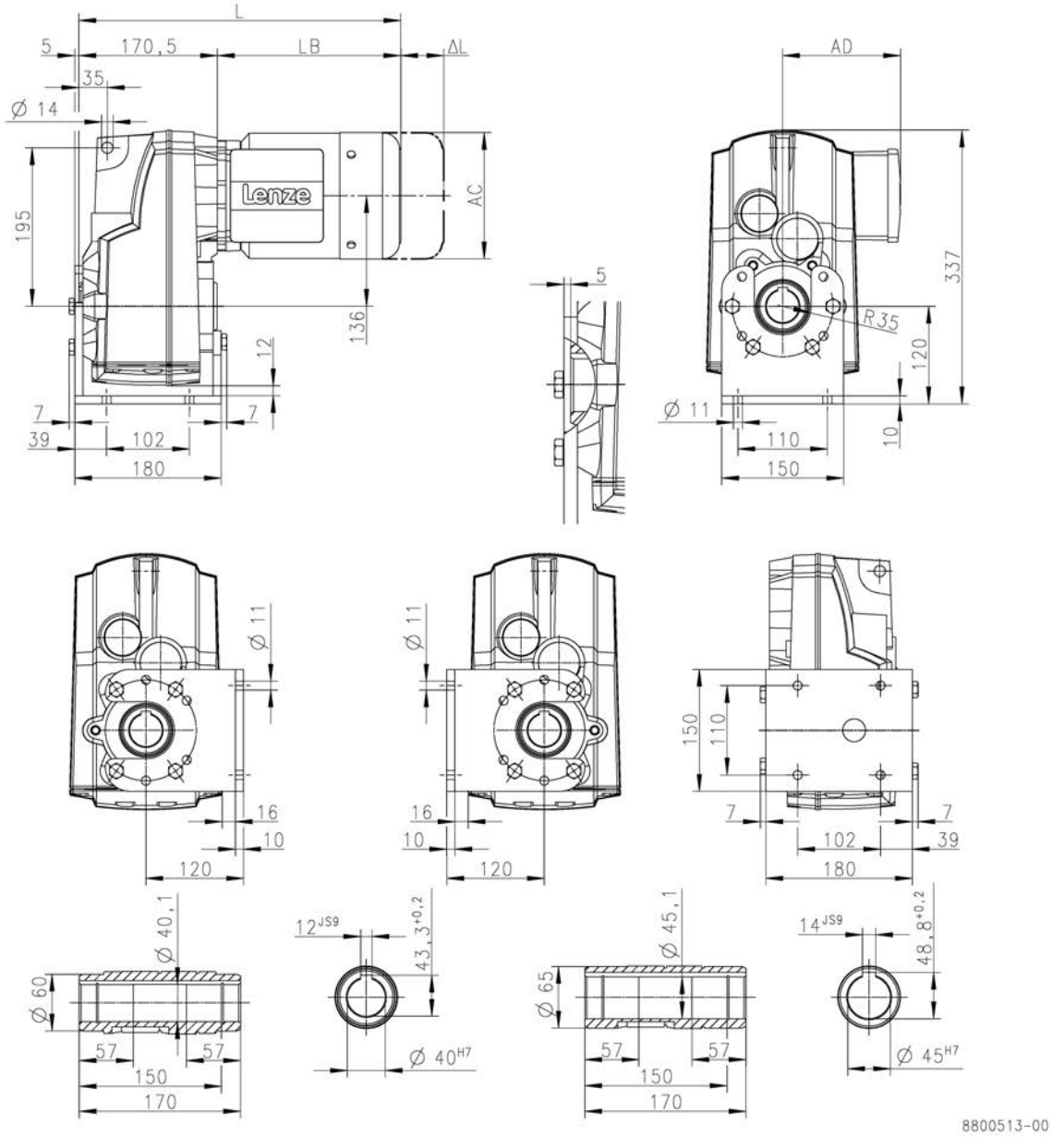

			m550							
			-P80/M4	-P90/M4	-P90/L4	-P100/M4	-P100/L4	-P112/M4	-P132/M4	-P132/L4
Total length	L	[mm]	431	495		555		562	629	
Motor length	LB	[mm]	260	324		384		391	458	
Length of motor options	Δ L	[mm]	183	175		170		183	201	
Motor diameter	AC	[mm]	157	177		195		219	261	
Distance motor/connection	AD	[mm]	148	154		164		171	182	

L = length of the motor without built-on accessories
ΔL = additional length of the built-on accessories (longest type)

Dimensions, 4-pole motors

g500-S660

Dimensions hollow shaft with shrink disc
Gearbox design: SDR, SCR, SCK

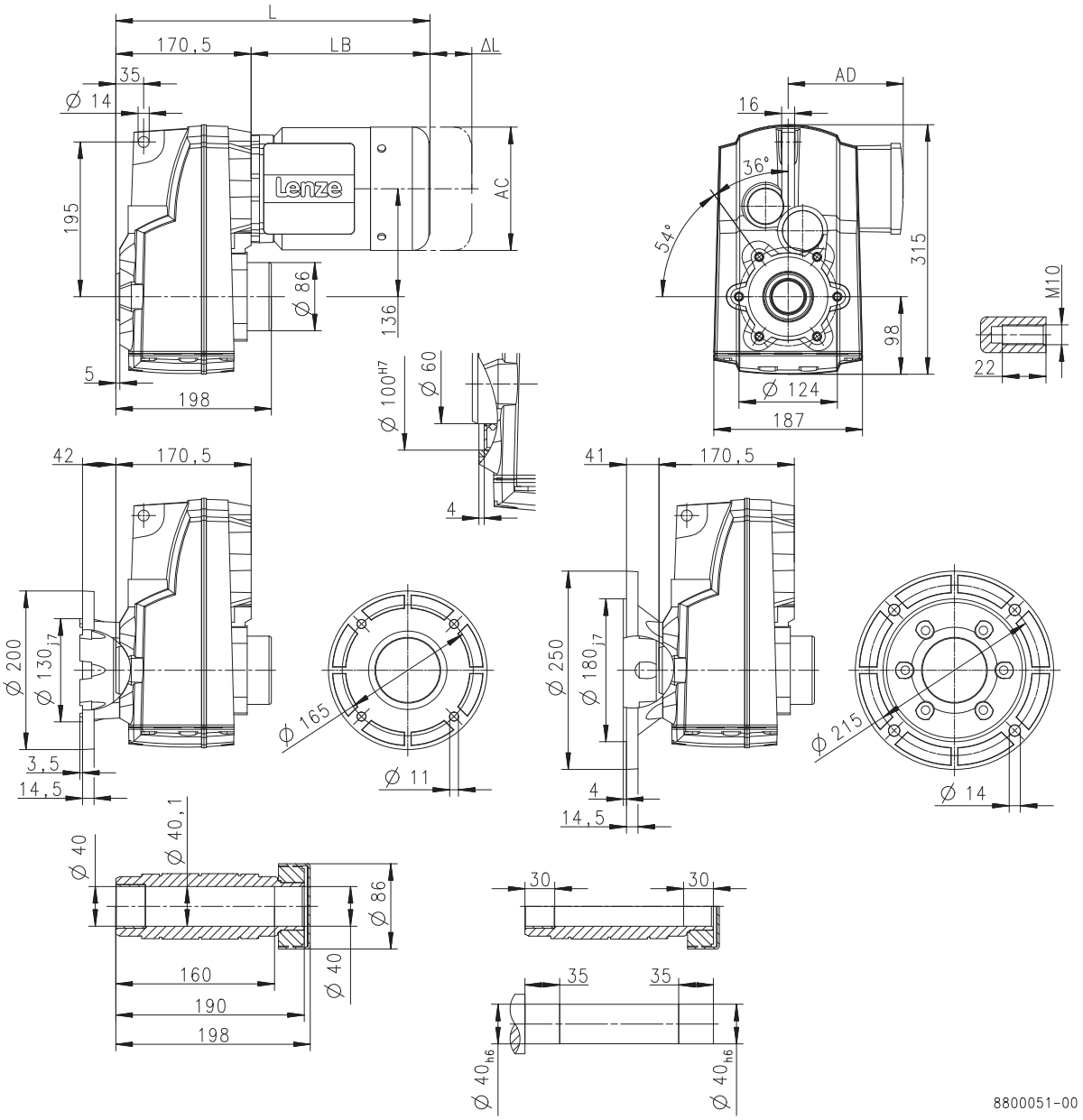

			MD□MA□□				
			063-12	063-32	063-42	071-32	071-42
Total length	L	[mm]	354			374	
Motor length	LB	[mm]	183			203	
Length of motor options	Δ L	[mm]	170			165	
Motor diameter	AC	[mm]	123			139	
Distance motor/connection	AD	[mm]	100			109	

L = length of the motor without built-on accessories
ΔL = additional length of the built-on accessories (longest type)

1 - Shrink disc dimensions

Dimensions, 4-pole motors

g500-S660

Dimensions hollow shaft with shrink disc
Gearbox design: SDR, SCR, SCK

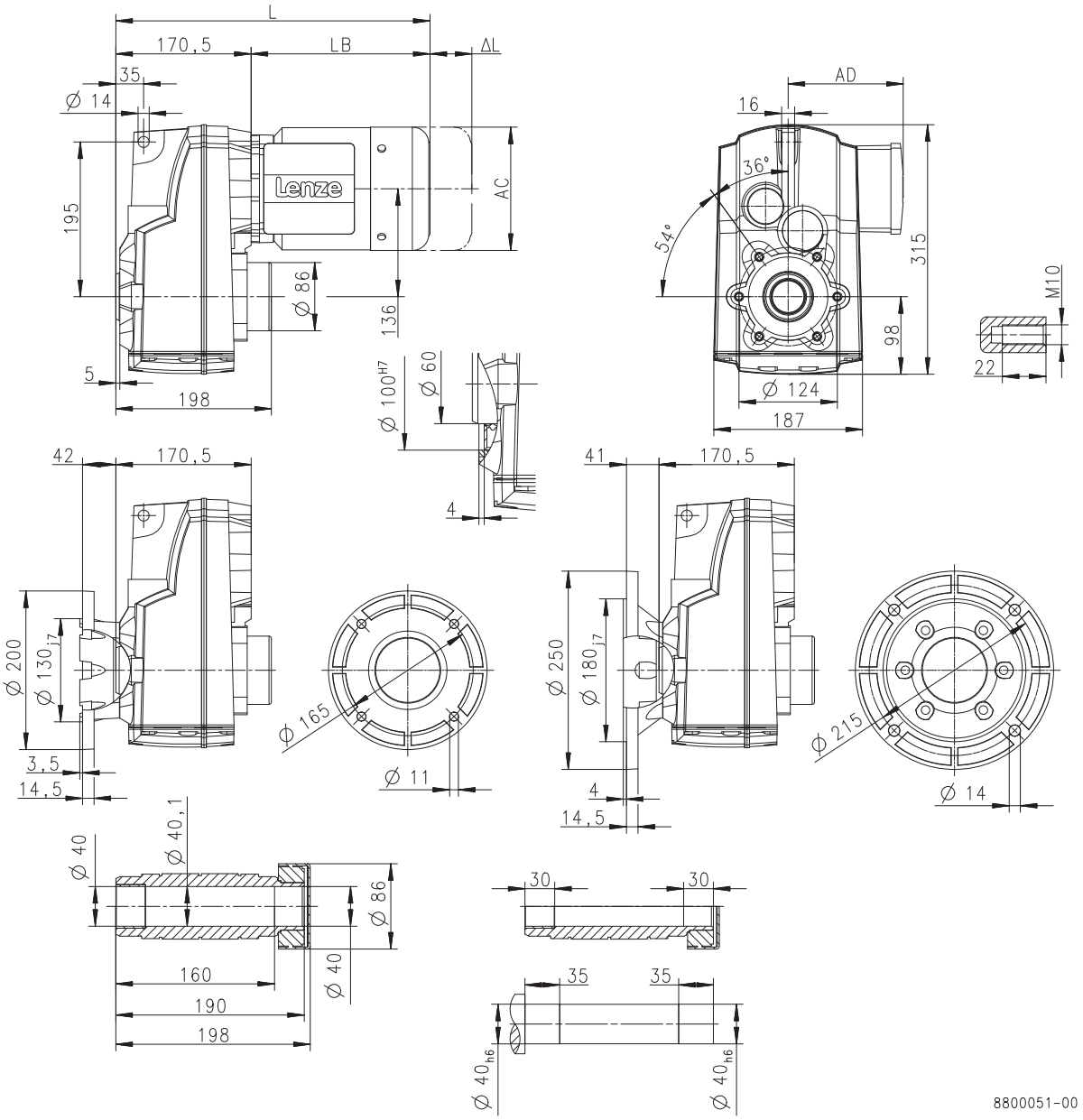

			m550							
			-P80/M4	-P90/M4	-P90/L4	-P100/M4	-P100/L4	-P112/M4	-P132/M4	-P132/L4
Total length	L	[mm]	431	495		555		562	629	
Motor length	LB	[mm]	260	324		384		391	458	
Length of motor options	Δ L	[mm]	183	175		170		183	201	
Motor diameter	AC	[mm]	157	177		195		219	261	
Distance motor/connection	AD	[mm]	148	154		164		171	182	

L = length of the motor without built-on accessories
ΔL = additional length of the built-on accessories (longest type)

1 - Shrink disc dimensions

Dimensions, 4-pole motors

g500-S660

Dimensions with solid shaft
Gearbox design: VDR, VCR, VCK

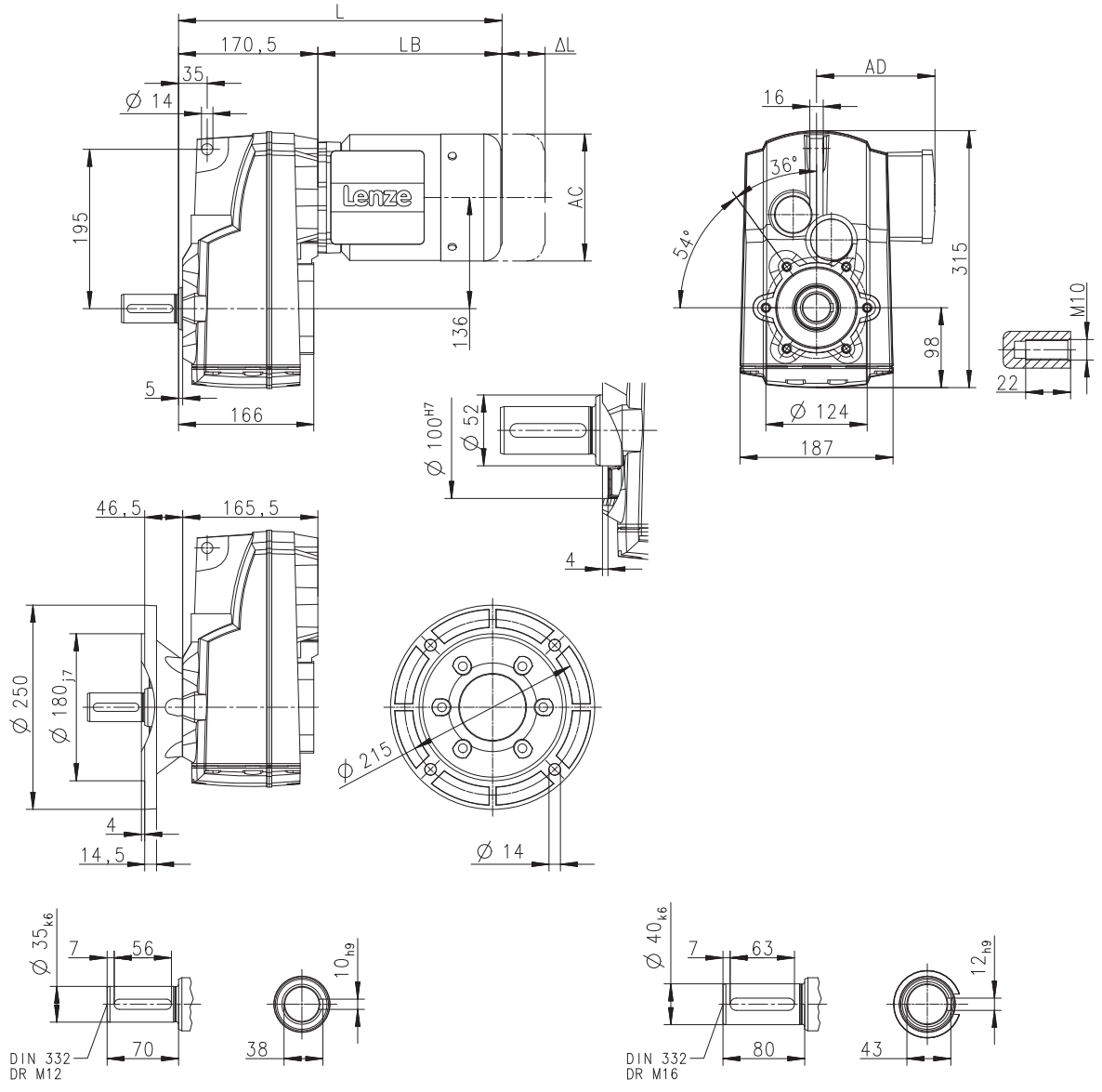

			MD□MA□□				
			063-12	063-32	063-42	071-32	071-42
Total length	L	[mm]	354			374	
Motor length	LB	[mm]	183			203	
Length of motor options	Δ L	[mm]	170			165	
Motor diameter	AC	[mm]	123			139	
Distance motor/connection	AD	[mm]	100			109	

L = length of the motor without built-on accessories
ΔL = additional length of the built-on accessories (longest type)

Dimensions, 4-pole motors

g500-S660

Dimensions with solid shaft
Gearbox design: VDR, VCR, VCK

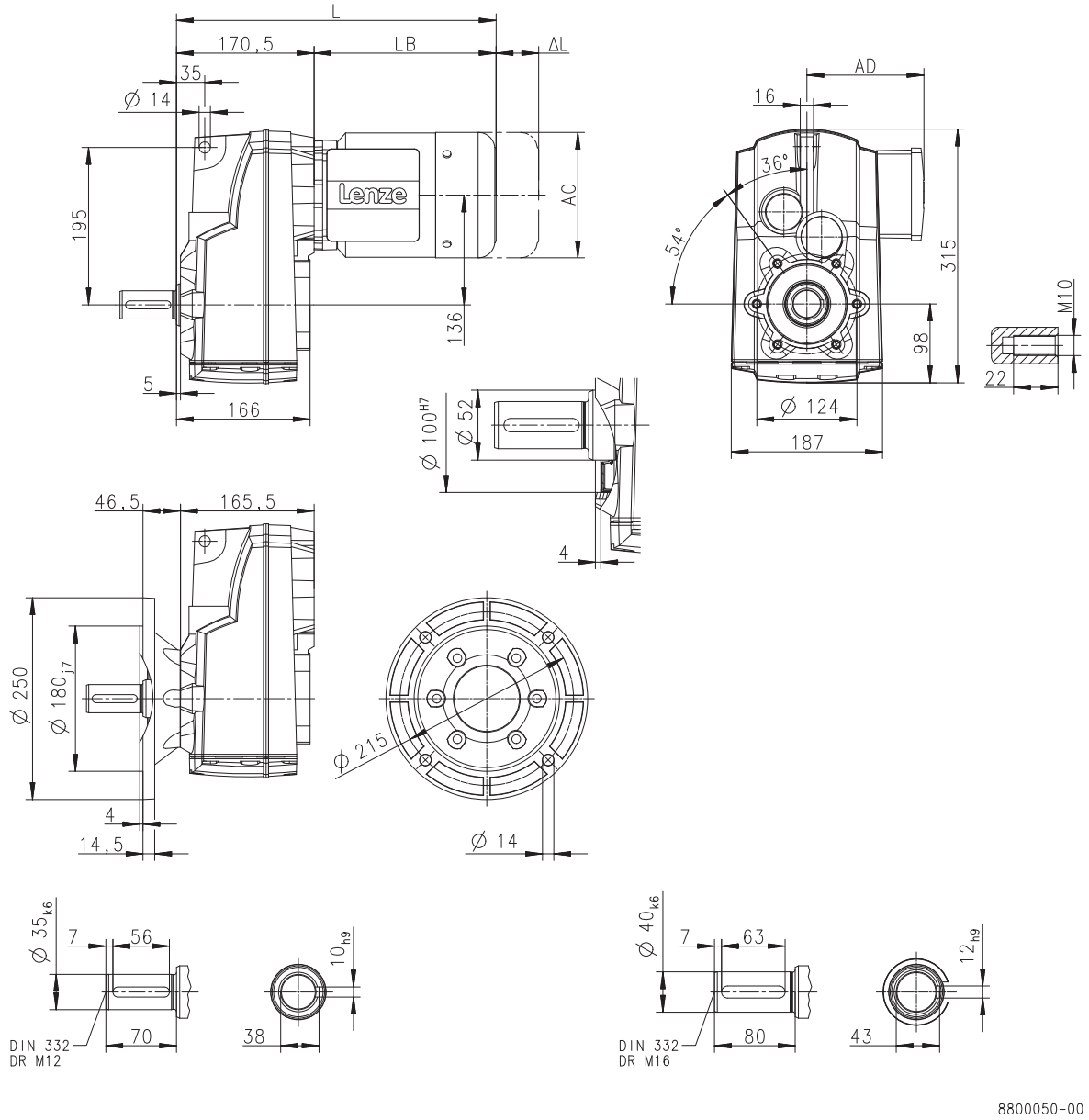

			m550							
			-P80/M4	-P90/M4	-P90/L4	-P100/M4	-P100/L4	-P112/M4	-P132/M4	-P132/L4
Total length	L	[mm]	431	495		555		562	629	
Motor length	LB	[mm]	260	324		384		391	458	
Length of motor options	Δ L	[mm]	183	175		170		183	201	
Motor diameter	AC	[mm]	157	177		195		219	261	
Distance motor/connection	AD	[mm]	148	154		164		171	182	

L = length of the motor without built-on accessories
ΔL = additional length of the built-on accessories (longest type)

Dimensions, 4-pole motors

g500-S660

Dimensions with solid shaft
Gearbox design: VBR

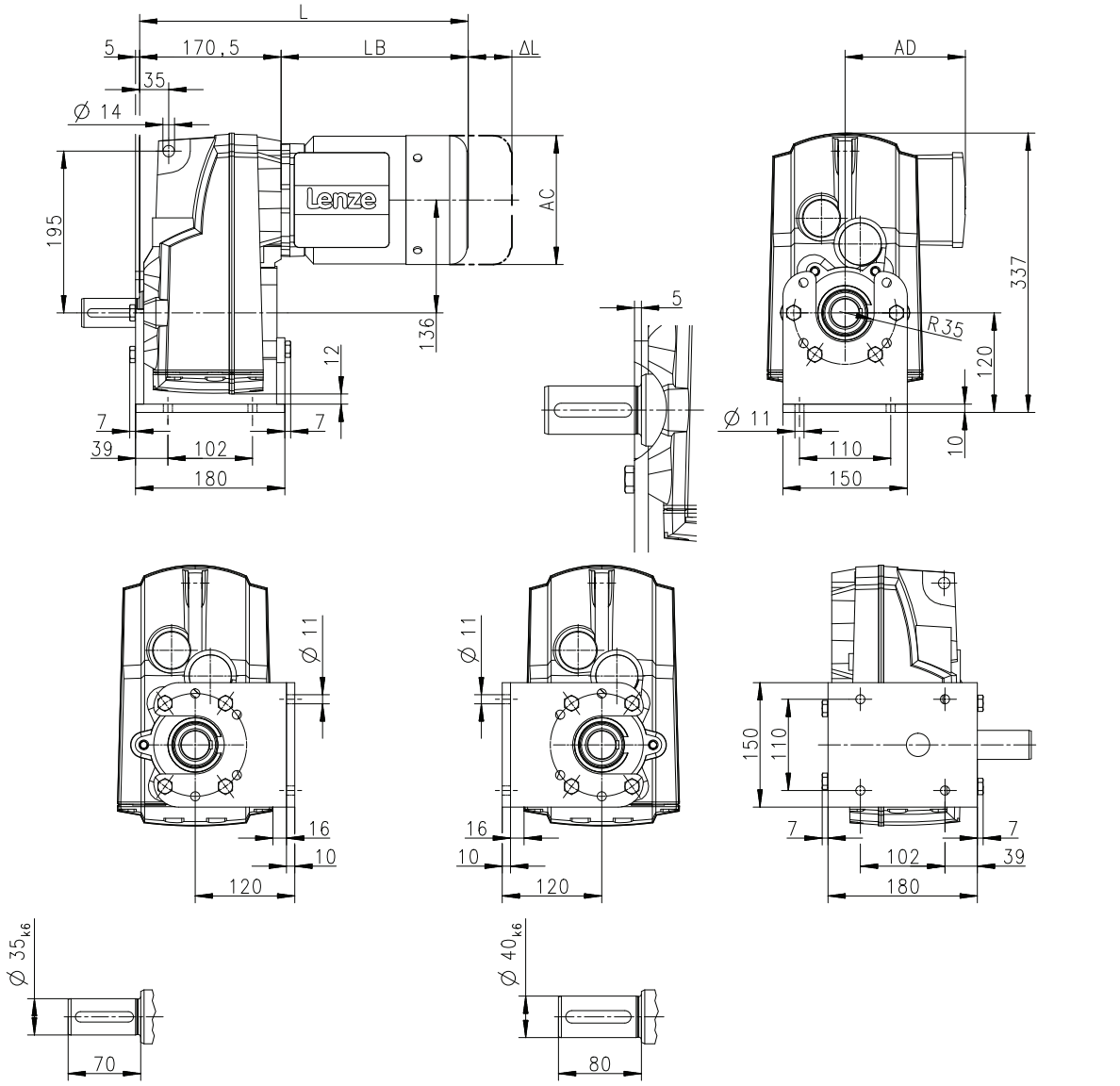

			MD□MA□□				
			063-12	063-32	063-42	071-32	071-42
Total length	L	[mm]	354			374	
Motor length	LB	[mm]	183			203	
Length of motor options	Δ L	[mm]	170			165	
Motor diameter	AC	[mm]	123			139	
Distance motor/connection	AD	[mm]	100			109	

L = length of the motor without built-on accessories
ΔL = additional length of the built-on accessories (longest type)

Dimensions, 4-pole motors

g500-S660

Dimensions with solid shaft
Gearbox design: VBR

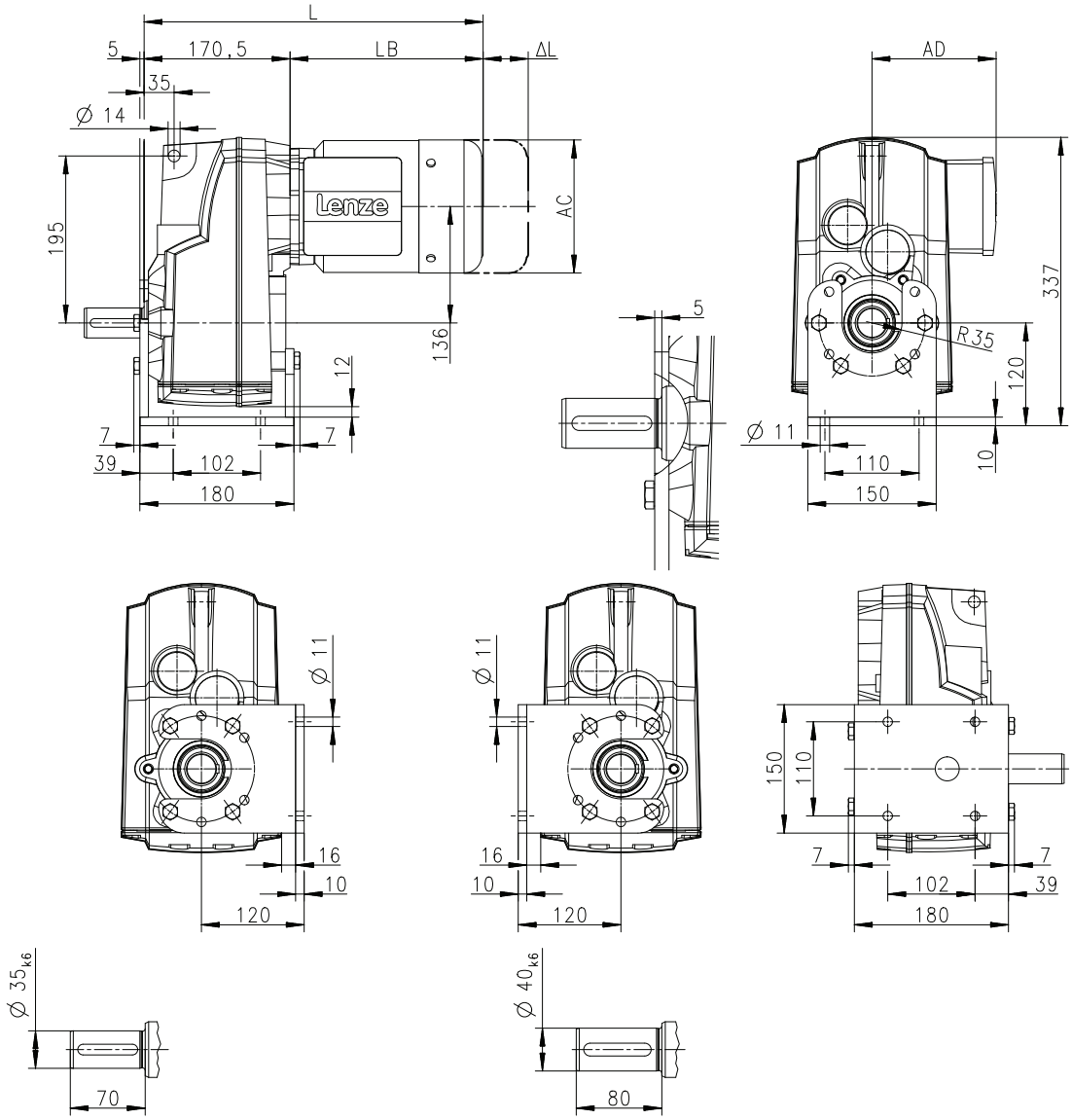

			m550							
			-P80/M4	-P90/M4	-P90/L4	-P100/M4	-P100/L4	-P112/M4	-P132/M4	-P132/L4
Total length	L	[mm]	431	495		555		562	629	
Motor length	LB	[mm]	260	324		384		391	458	
Length of motor options	Δ L	[mm]	183	175		170		183	201	
Motor diameter	AC	[mm]	157	177		195		219	261	
Distance motor/connection	AD	[mm]	148	154		164		171	182	

L = length of the motor without built-on accessories
ΔL = additional length of the built-on accessories (longest type)

Dimensions, 4-pole motors

g500-S950

Dimensions with hollow shaft
Gearbox design: HBR, HAR, HAK

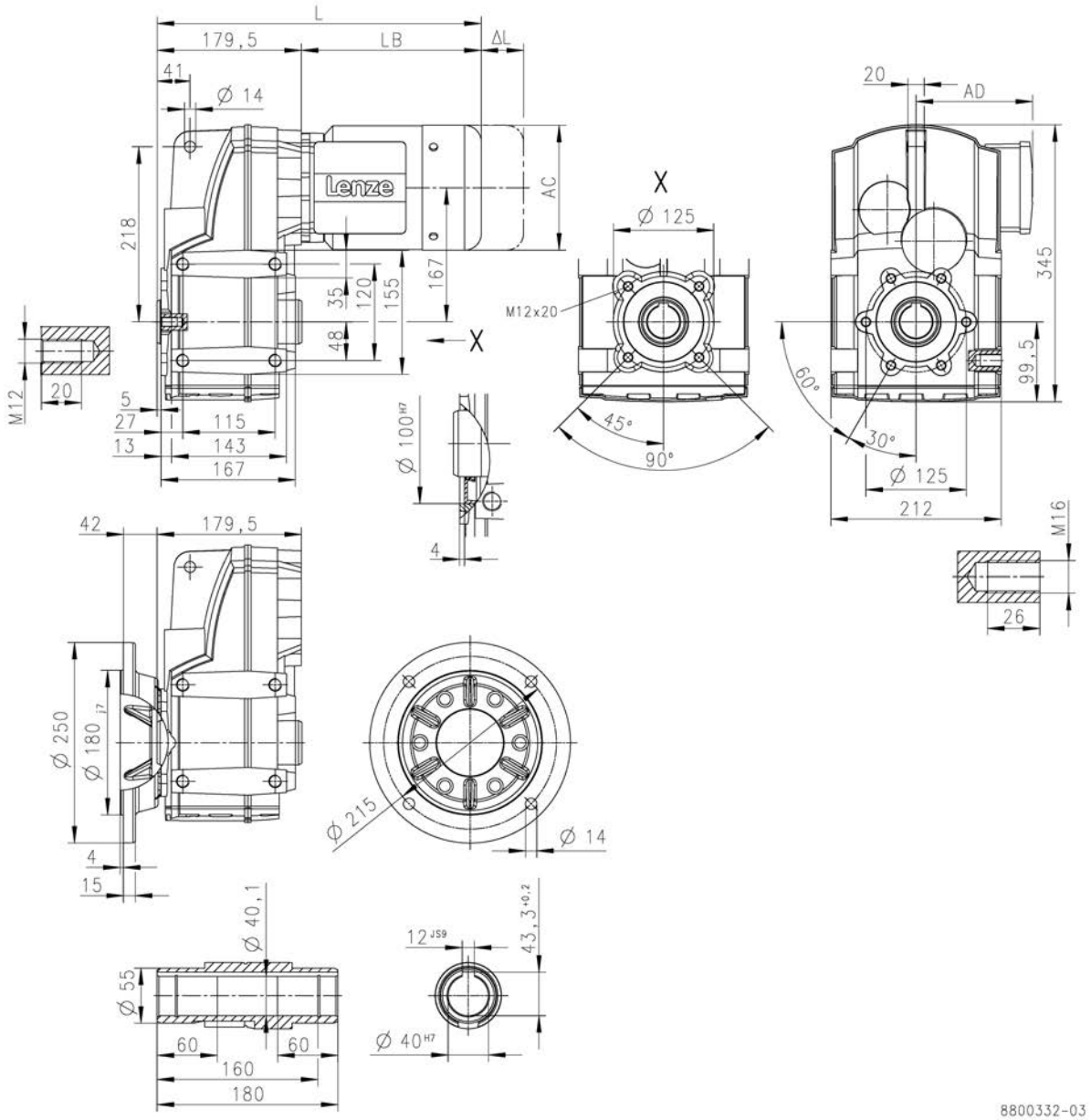

			MD□MA□□				
			063-12	063-32	063-42	071-32	071-42
Total length	L	[mm]	363			383	
Motor length	LB	[mm]	183			203	
Length of motor options	Δ L	[mm]	170			165	
Motor diameter	AC	[mm]	123			139	
Distance motor/connection	AD	[mm]	100			109	

L = length of the motor without built-on accessories
ΔL = additional length of the built-on accessories (longest type)

Dimensions, 4-pole motors

g500-S950

Dimensions with hollow shaft
Gearbox design: HBR, HAR, HAK

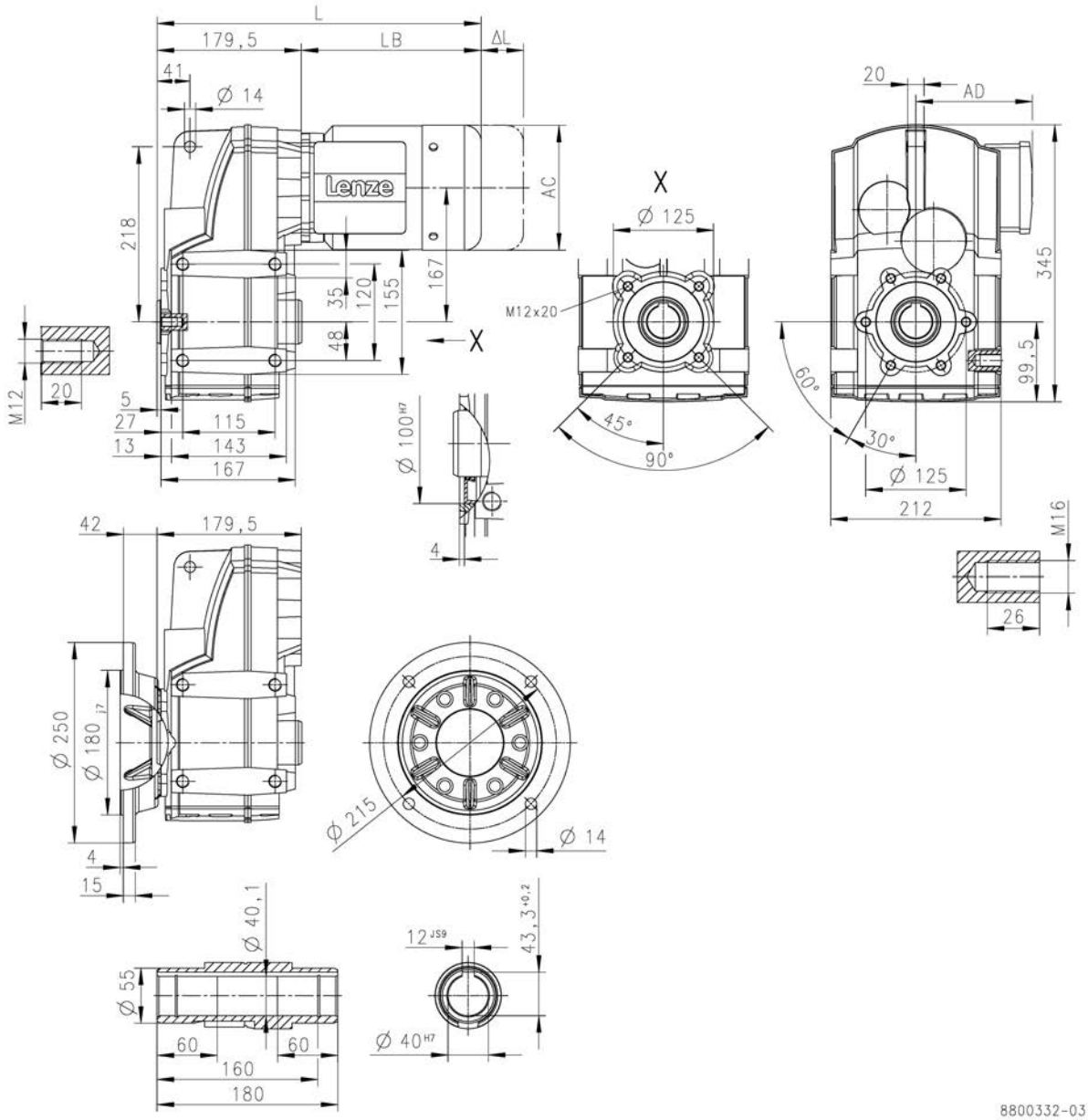

			m550							
			-P80/M4	-P90/M4	-P90/L4	-P100/M4	-P100/L4	-P112/M4	-P132/M4	-P132/L4
Total length	L	[mm]	440	504		564		571	638	
Motor length	LB	[mm]	260	324		384		391	458	
Length of motor options	Δ L	[mm]	183	175		170		183	201	
Motor diameter	AC	[mm]	157	177		195		219	261	
Distance motor/connection	AD	[mm]	148	154		164		171	182	

L = length of the motor without built-on accessories
ΔL = additional length of the built-on accessories (longest type)

Dimensions, 4-pole motors

g500-S950

Dimensions hollow shaft with shrink disc
Gearbox design: SBR, SAR, SAK

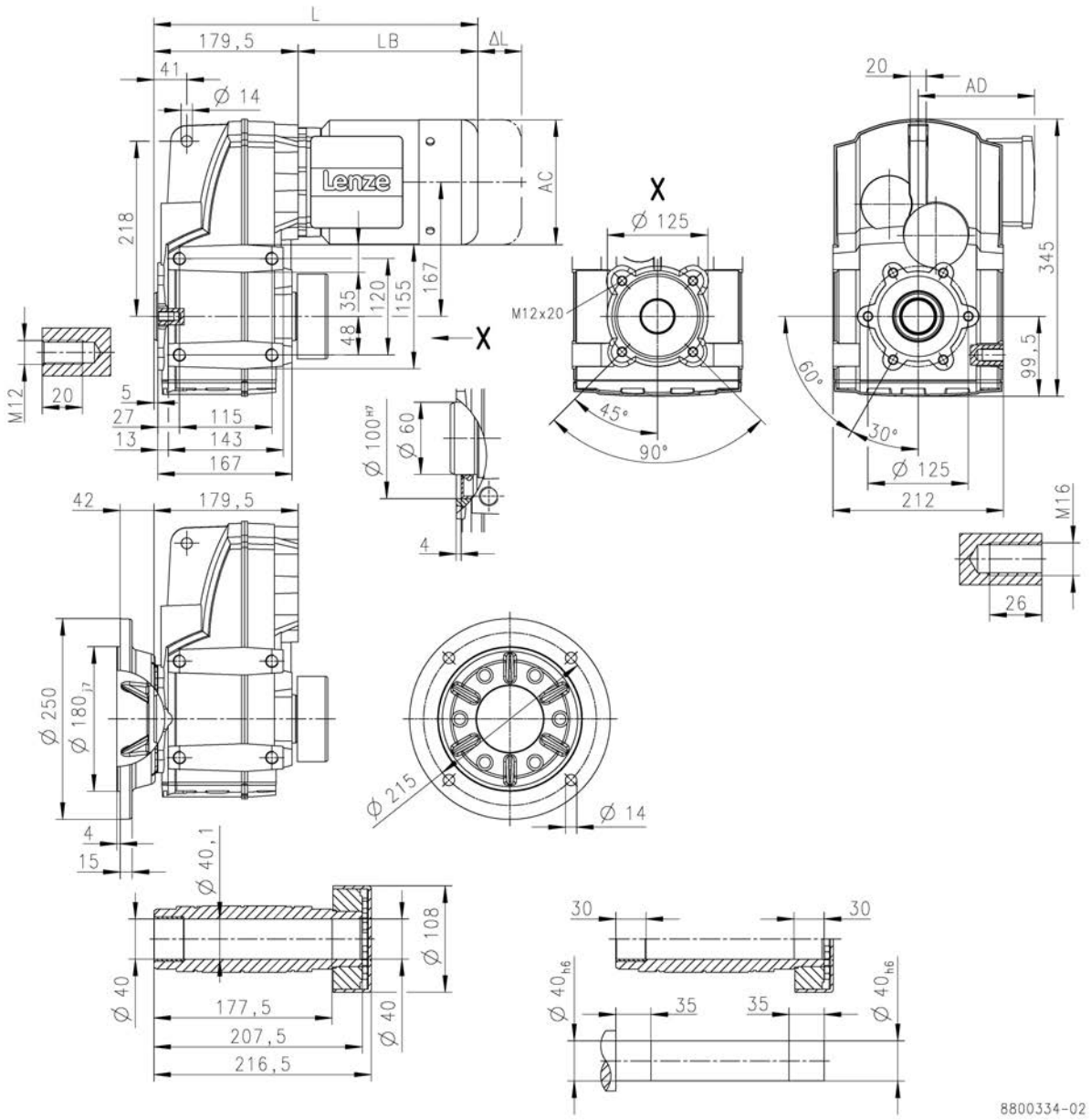

			MD□MA□□				
			063-12	063-32	063-42	071-32	071-42
Total length	L	[mm]	363			383	
Motor length	LB	[mm]	183			203	
Length of motor options	Δ L	[mm]	170			165	
Motor diameter	AC	[mm]	123			139	
Distance motor/connection	AD	[mm]	100			109	

L = length of the motor without built-on accessories
ΔL = additional length of the built-on accessories (longest type)

1 - Shrink disc dimensions

Dimensions, 4-pole motors

g500-S950

Dimensions hollow shaft with shrink disc
Gearbox design: SBR, SAR, SAK

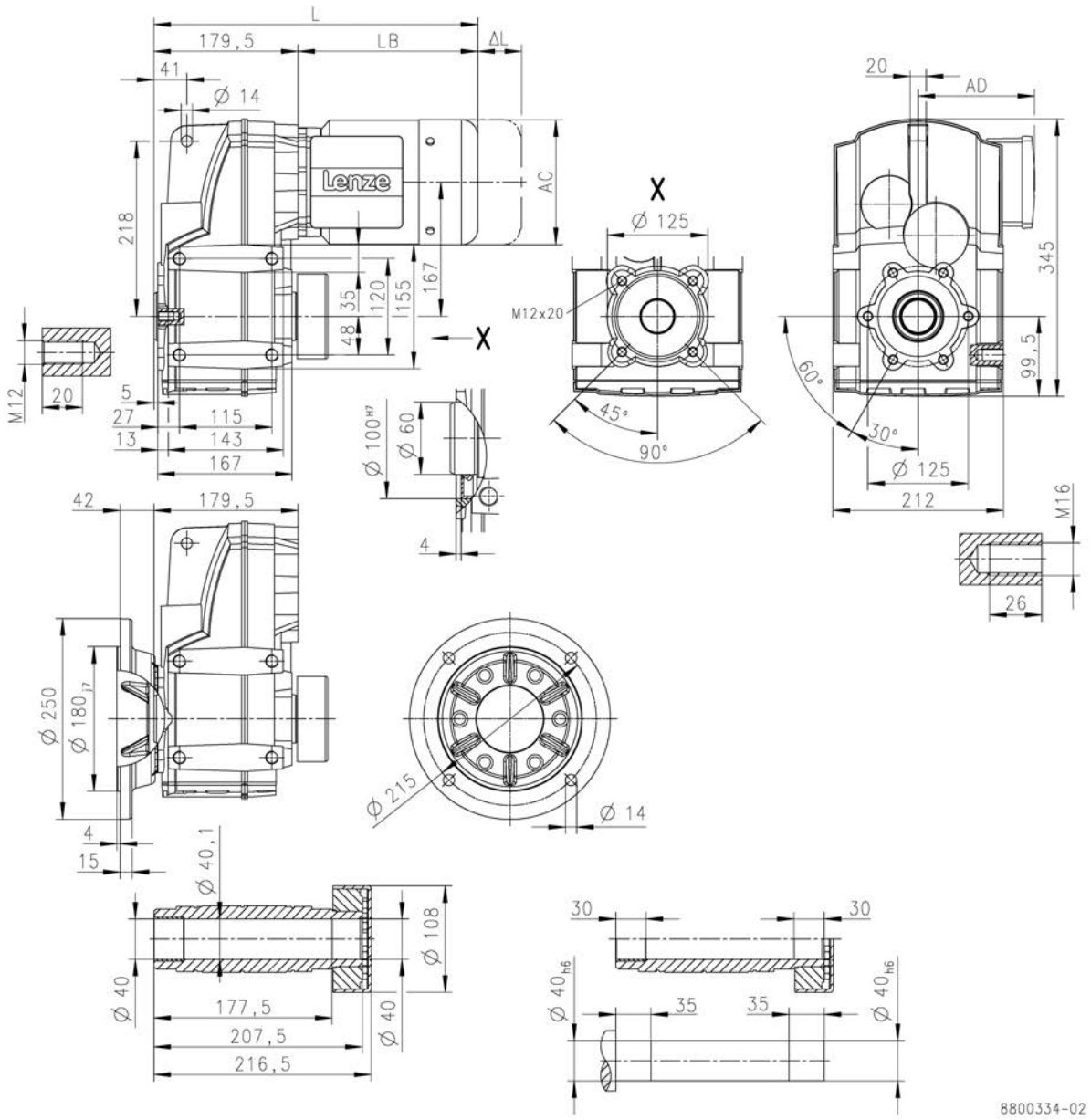

			m550							
			-P80/M4	-P90/M4	-P90/L4	-P100/M4	-P100/L4	-P112/M4	-P132/M4	-P132/L4
Total length	L	[mm]	440	504		564		571	638	
Motor length	LB	[mm]	260	324		384		391	458	
Length of motor options	Δ L	[mm]	183	175		170		183	201	
Motor diameter	AC	[mm]	157	177		195		219	261	
Distance motor/connection	AD	[mm]	148	154		164		171	182	

L = length of the motor without built-on accessories
ΔL = additional length of the built-on accessories (longest type)

1 - Shrink disc dimensions

Dimensions, 4-pole motors

g500-S950

Dimensions with solid shaft
Gearbox design: VBR, VAR, VAK

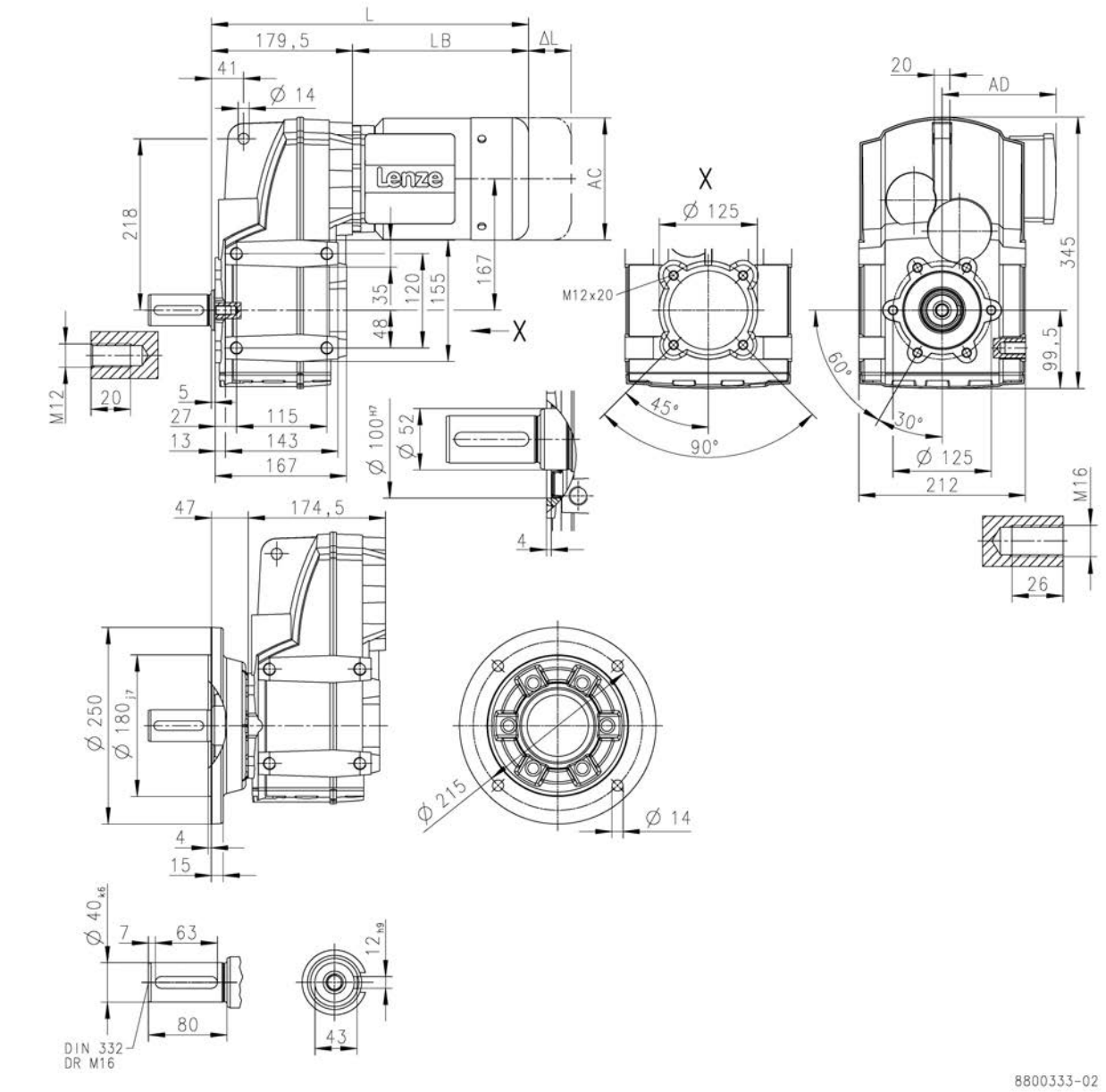

			MD□MA□□				
			063-12	063-32	063-42	071-32	071-42
Total length	L	[mm]	363			383	
Motor length	LB	[mm]	183			203	
Length of motor options	Δ L	[mm]	170			165	
Motor diameter	AC	[mm]	123			139	
Distance motor/connection	AD	[mm]	100			109	

L = length of the motor without built-on accessories
ΔL = additional length of the built-on accessories (longest type)

Dimensions, 4-pole motors

g500-S950

Dimensions with solid shaft
Gearbox design: VBR, VAR, VAK

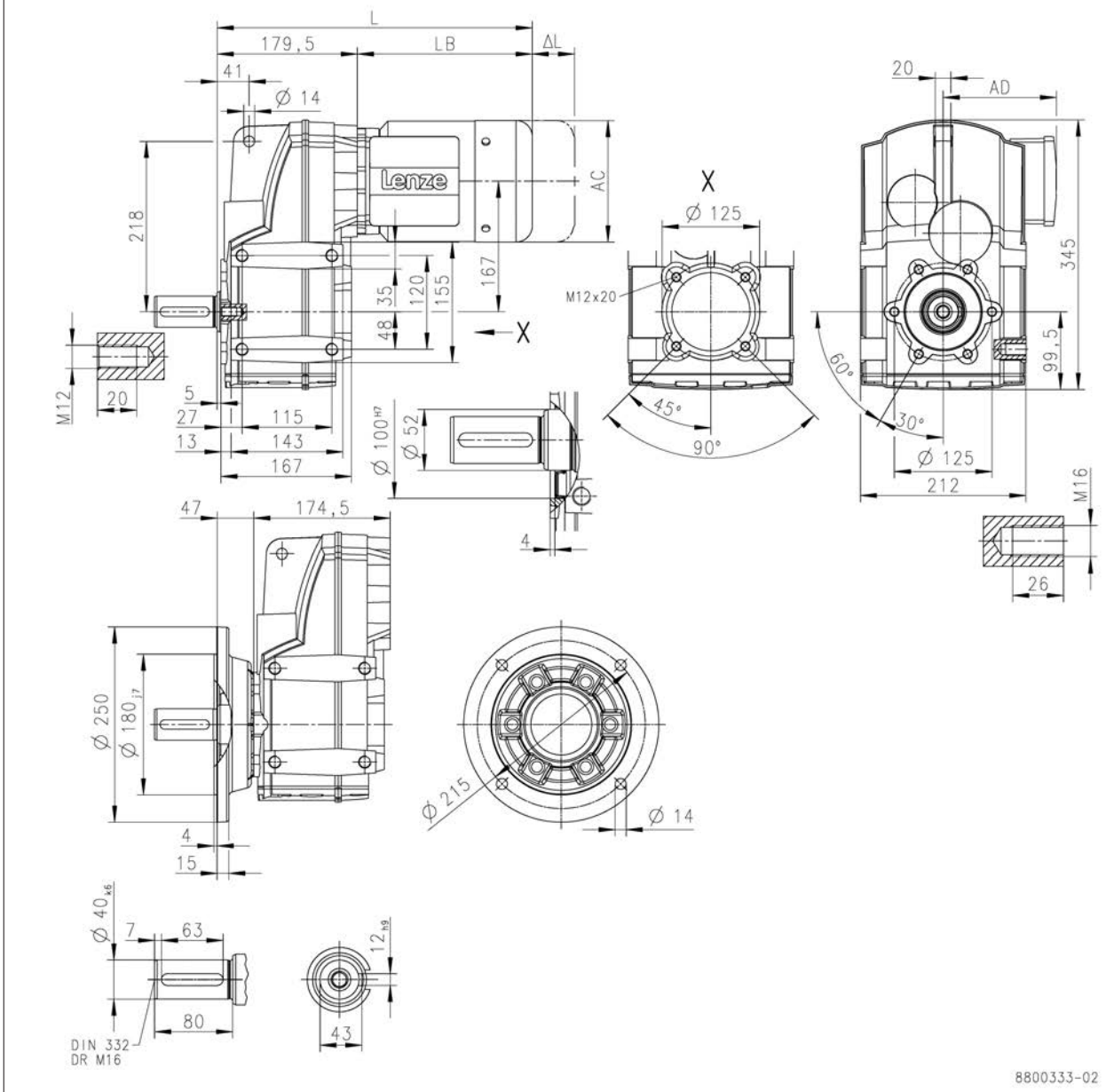

			m550							
			-P80/M4	-P90/M4	-P90/L4	-P100/M4	-P100/L4	-P112/M4	-P132/M4	-P132/L4
Total length	L	[mm]	440	504		564		571	638	
Motor length	LB	[mm]	260	324		384		391	458	
Length of motor options	Δ L	[mm]	183	175		170		183	201	
Motor diameter	AC	[mm]	157	177		195		219	261	
Distance motor/connection	AD	[mm]	148	154		164		171	182	

L = length of the motor without built-on accessories
ΔL = additional length of the built-on accessories (longest type)

Dimensions, 4-pole motors

g500-S2100

Dimensions with hollow shaft
Gearbox design: HBR, HAR, HAK

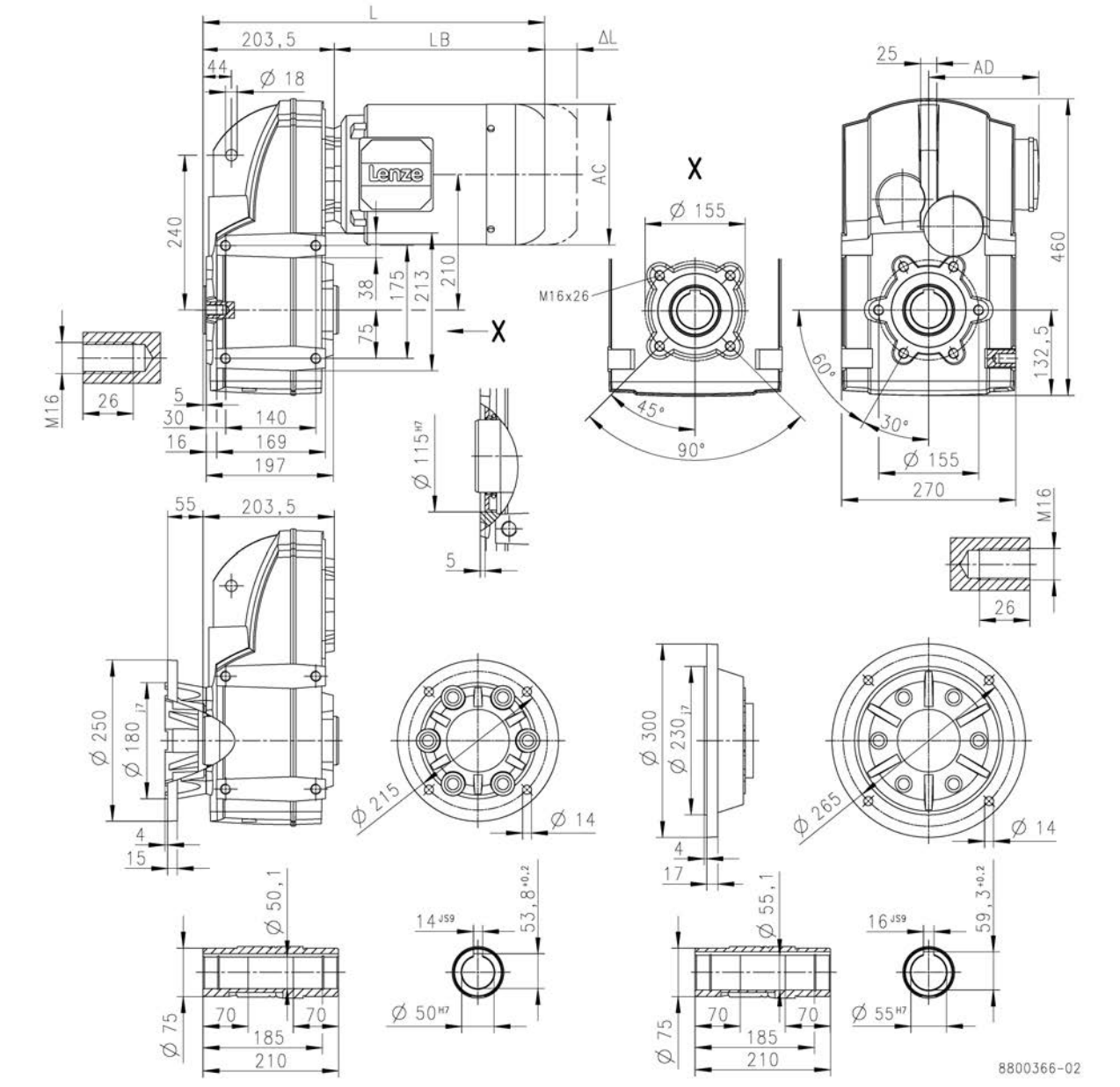

			MD□MA□□		
			063-42	071-32	071-42
Total length	L	[mm]	387	407	
Motor length	LB	[mm]	183	203	
Length of motor options	Δ L	[mm]	170	165	
Motor diameter	AC	[mm]	123	139	
Distance motor/connection	AD	[mm]	100	109	

L = length of the motor without built-on accessories
ΔL = additional length of the built-on accessories (longest type)

Dimensions, 4-pole motors

g500-S2100

Dimensions with hollow shaft
Gearbox design: HBR, HAR, HAK

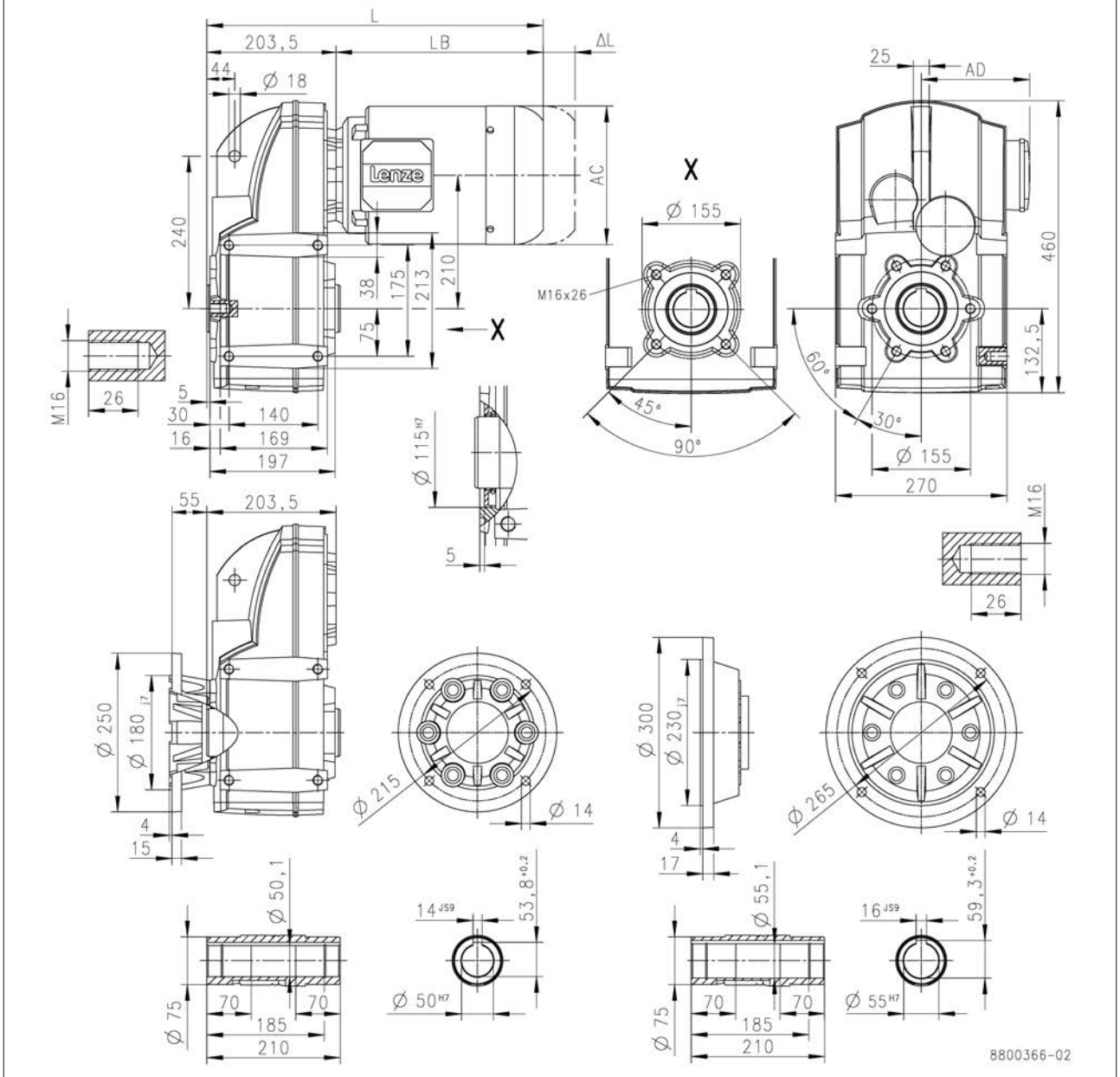

			m550							
			-P80/M4	-P90/M4	-P90/L4	-P100/M4	-P100/L4	-P112/M4	-P132/M4	-P132/L4
Total length	L	[mm]	464	528		588		595	662	
Motor length	LB	[mm]	260	324		384		391	458	
Length of motor options	Δ L	[mm]	183	175		170		183	201	
Motor diameter	AC	[mm]	157	177		195		219	261	
Distance motor/connection	AD	[mm]	148	154		164		171	182	

L = length of the motor without built-on accessories
ΔL = additional length of the built-on accessories (longest type)

Dimensions, 4-pole motors

g500-S2100

Dimensions with hollow shaft
Gearbox design: HBR, HAR, HAK

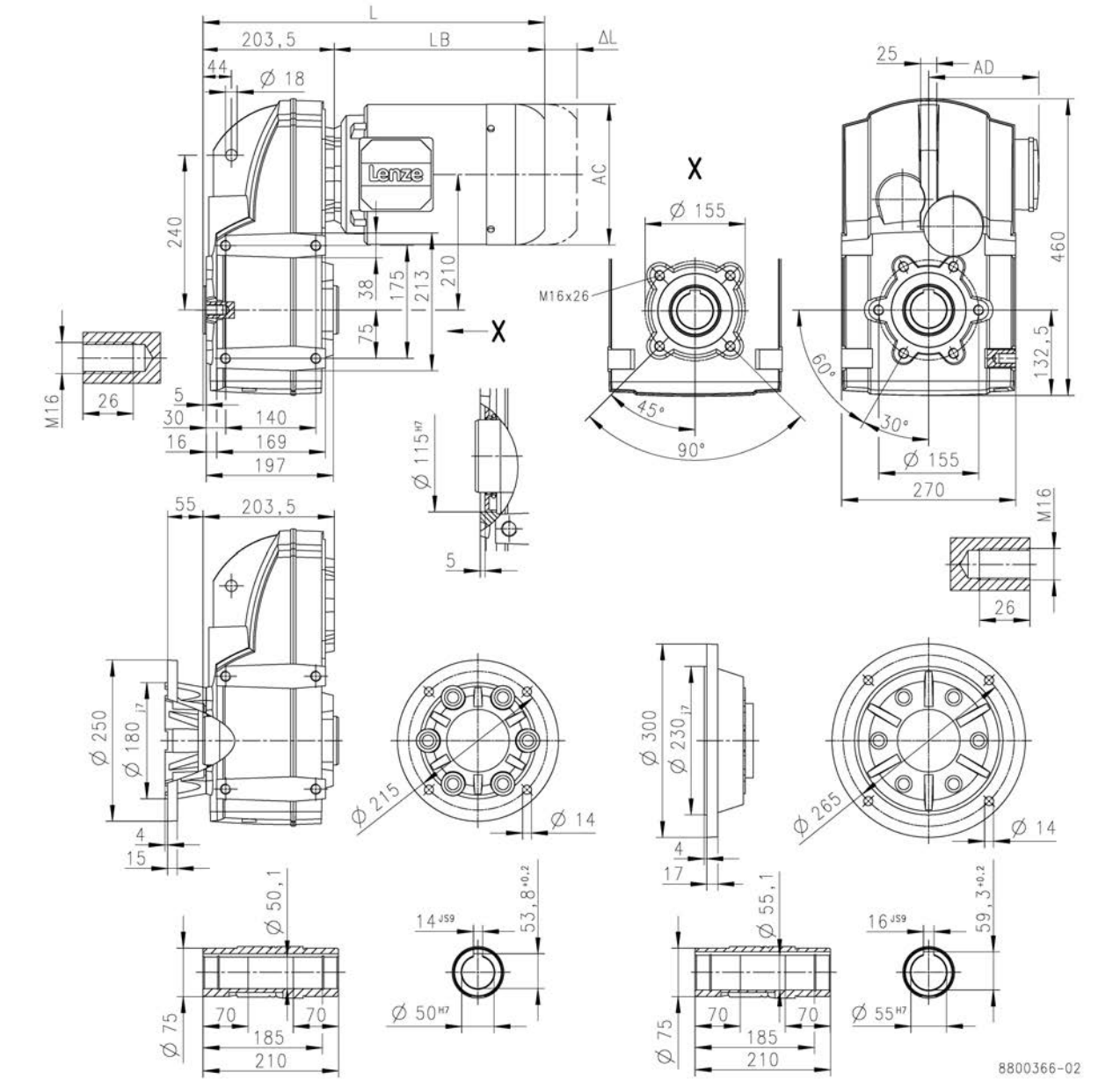

			m550				
			-P160/M4	-P160/L4	-P180/M4	-P180/L4	-P180/V4
Total length	L	[mm]	773		849		893
Motor length	LB	[mm]	569		645		689
Length of motor options	Δ L	[mm]	237		267		
Motor diameter	AC	[mm]	313		351		
Distance motor/connection	AD	[mm]	231		282		

L = length of the motor without built-on accessories
ΔL = additional length of the built-on accessories (longest type)

Dimensions, 4-pole motors

g500-S2100

Dimensions hollow shaft with shrink disc
Gearbox design: SBR, SAR, SAK

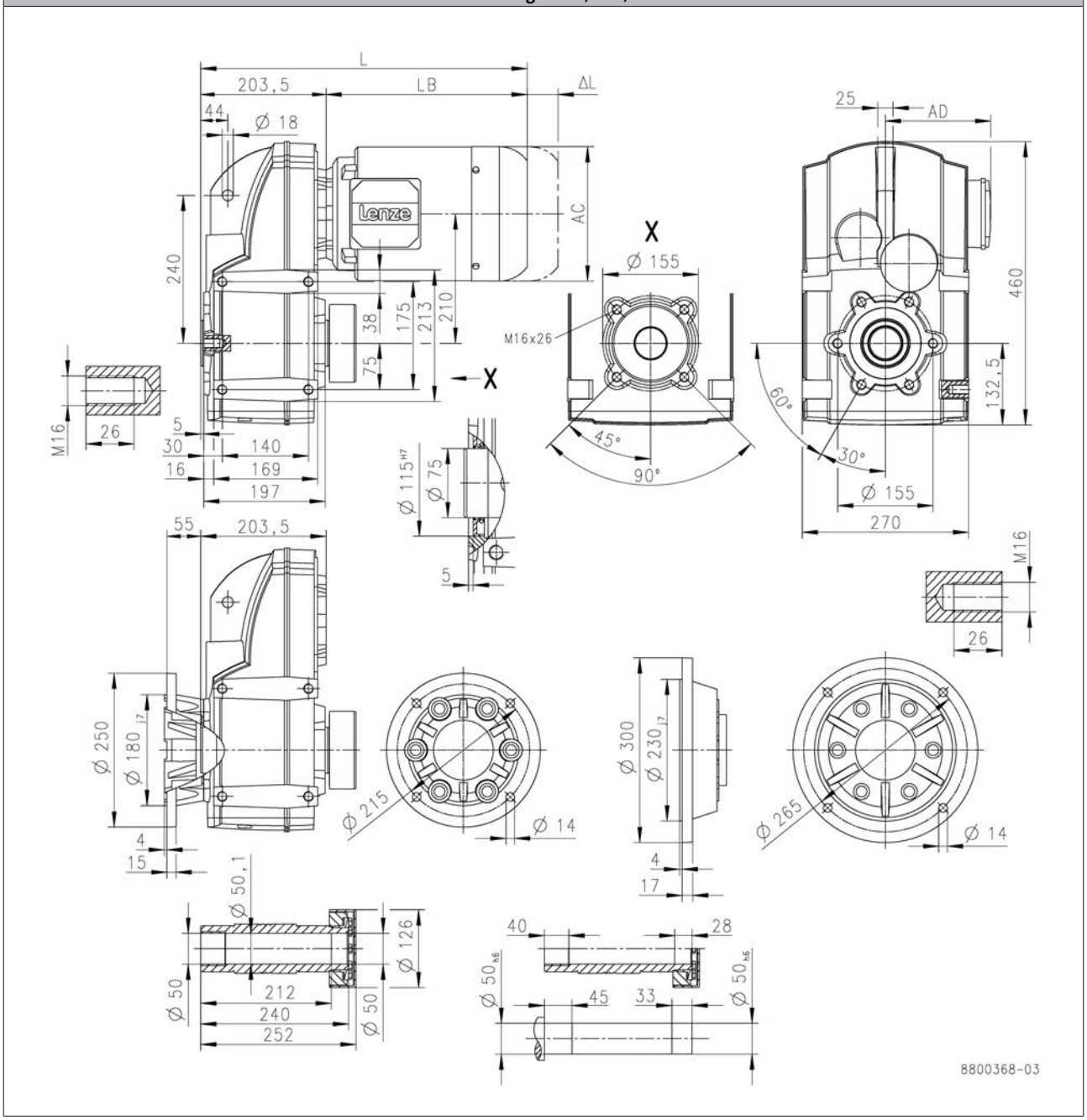

			MD□MA□□		
			063-42	071-32	071-42
Total length	L	[mm]	387	407	
Motor length	LB	[mm]	183	203	
Length of motor options	Δ L	[mm]	170	165	
Motor diameter	AC	[mm]	123	139	
Distance motor/connection	AD	[mm]	100	109	

L = length of the motor without built-on accessories
ΔL = additional length of the built-on accessories (longest type)

1 - Shrink disc dimensions

Dimensions, 4-pole motors

g500-S2100

Dimensions hollow shaft with shrink disc
Gearbox design: SBR, SAR, SAK

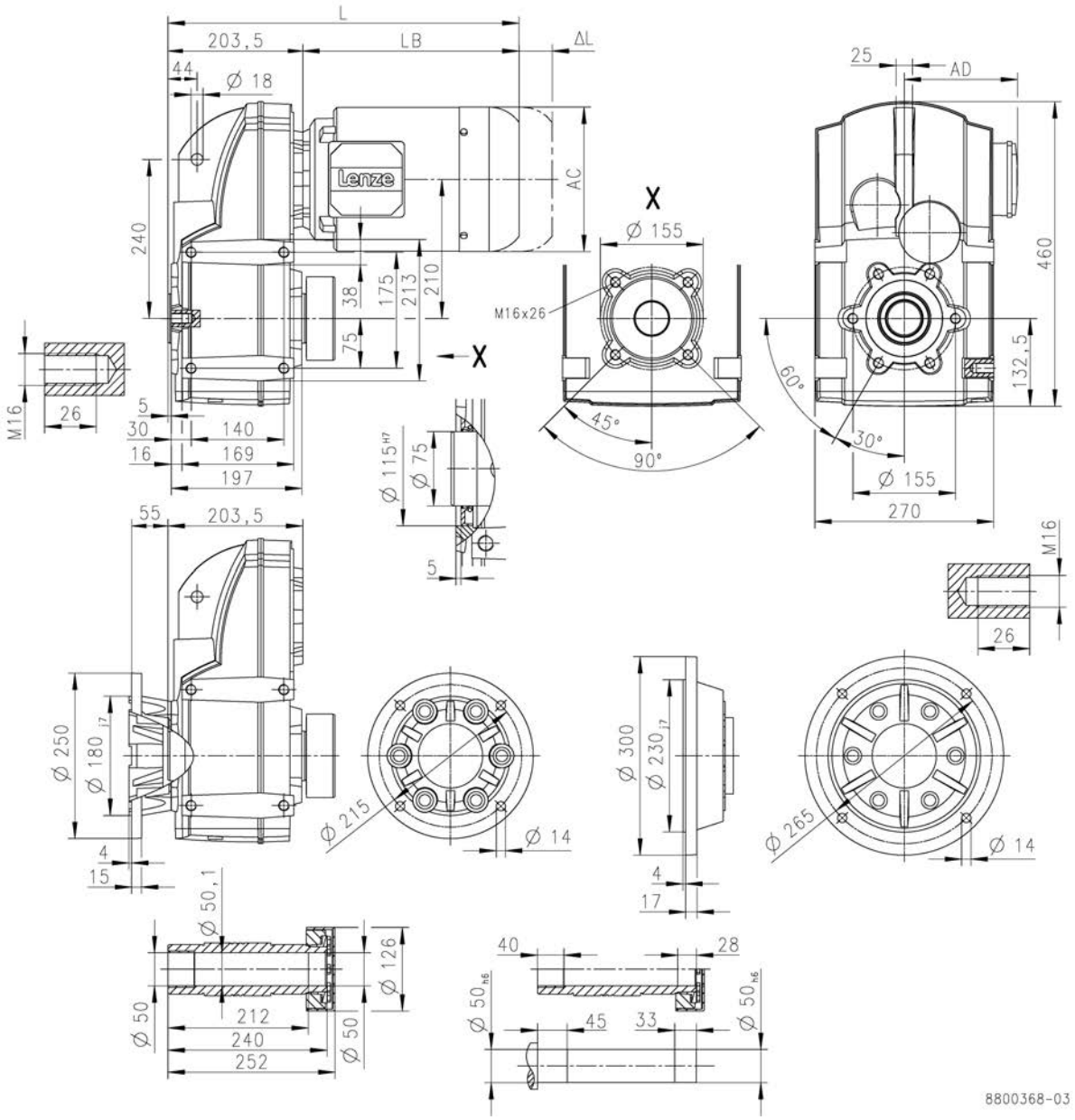

			m550							
			-P80/M4	-P90/M4	-P90/L4	-P100/M4	-P100/L4	-P112/M4	-P132/M4	-P132/L4
Total length	L	[mm]	464	528		588		595	662	
Motor length	LB	[mm]	260	324		384		391	458	
Length of motor options	Δ L	[mm]	183	175		170		183	201	
Motor diameter	AC	[mm]	157	177		195		219	261	
Distance motor/connection	AD	[mm]	148	154		164		171	182	

L = length of the motor without built-on accessories
ΔL = additional length of the built-on accessories (longest type)

1 - Shrink disc dimensions

Dimensions, 4-pole motors

g500-S2100

Dimensions hollow shaft with shrink disc
Gearbox design: SBR, SAR, SAK

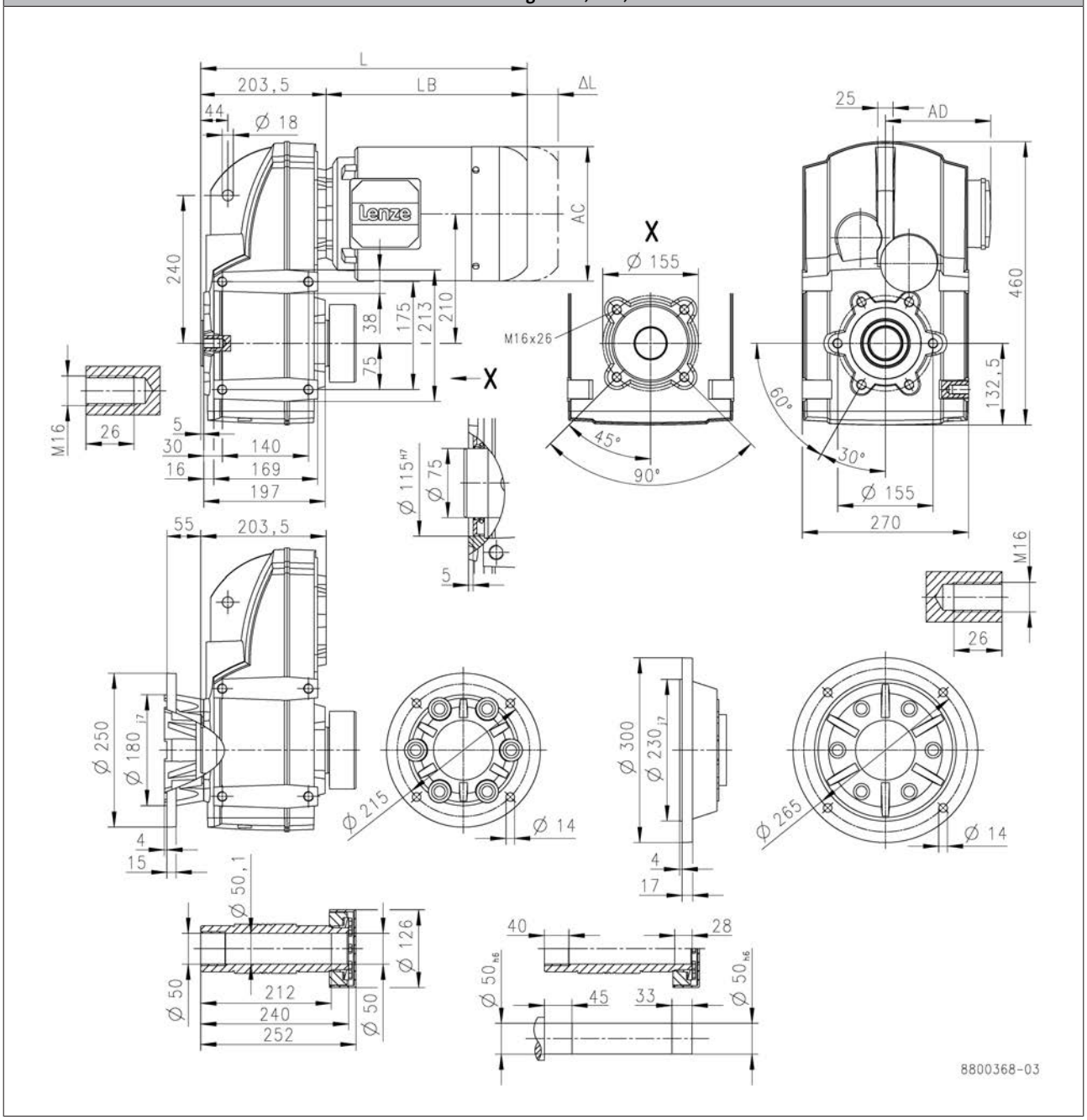

			m550				
			-P160/M4	-P160/L4	-P180/M4	-P180/L4	-P180/V4
Total length	L	[mm]	773		849		893
Motor length	LB	[mm]	569		645		689
Length of motor options	Δ L	[mm]	237		267		
Motor diameter	AC	[mm]	313		351		
Distance motor/connection	AD	[mm]	231		282		

L = length of the motor without built-on accessories
ΔL = additional length of the built-on accessories (longest type)

1 - Shrink disc dimensions

Dimensions, 4-pole motors

g500-S2100

Dimensions with solid shaft
Gearbox design: VBR, VAR, VAK

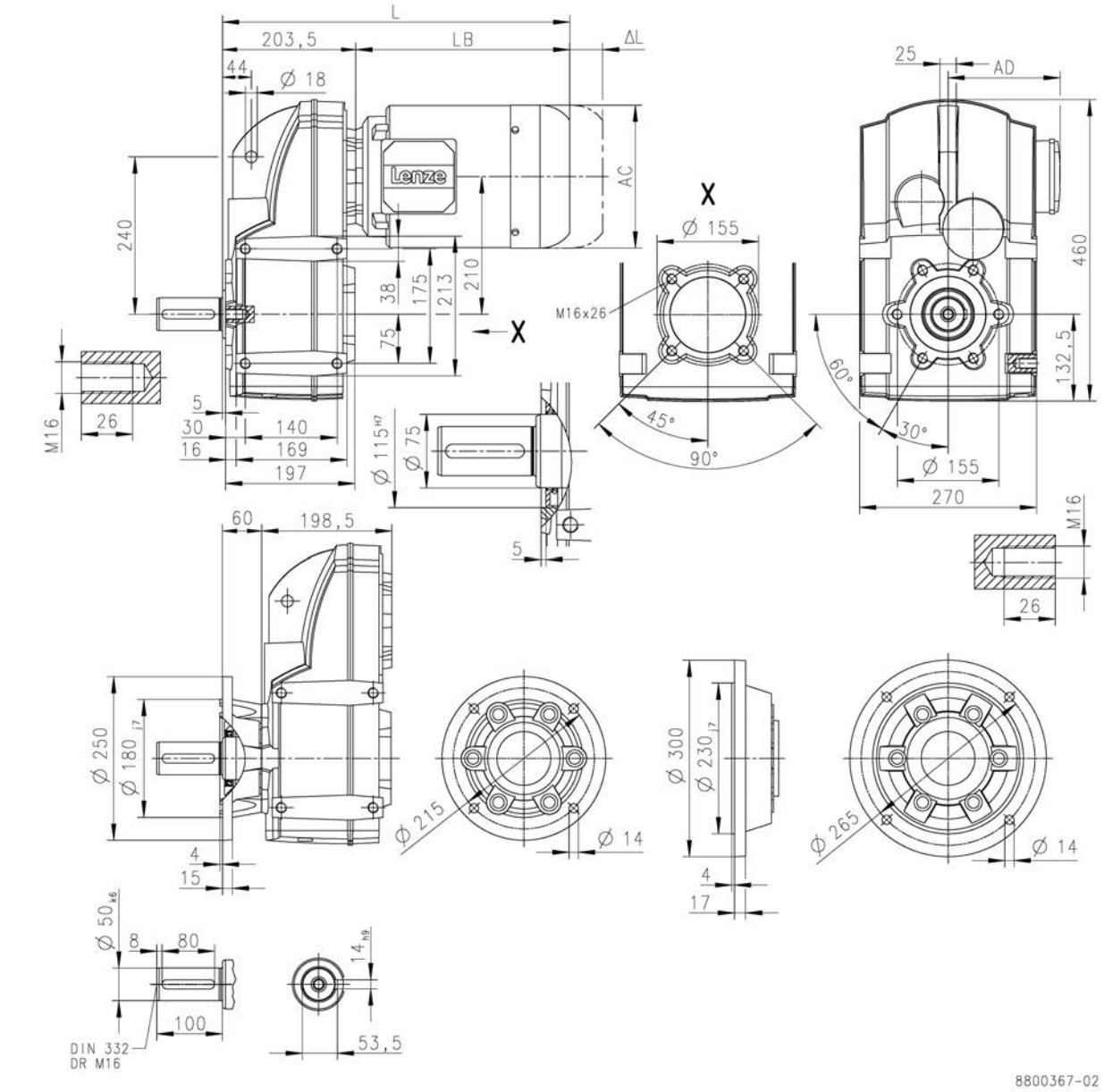

			MD□MA□□		
			063-42	071-32	071-42
Total length	L	[mm]	387	407	
Motor length	LB	[mm]	183	203	
Length of motor options	Δ L	[mm]	170	165	
Motor diameter	AC	[mm]	123	139	
Distance motor/connection	AD	[mm]	100	109	

L = length of the motor without built-on accessories
ΔL = additional length of the built-on accessories (longest type)

Dimensions, 4-pole motors

g500-S2100

Dimensions with solid shaft
Gearbox design: VBR, VAR, VAK

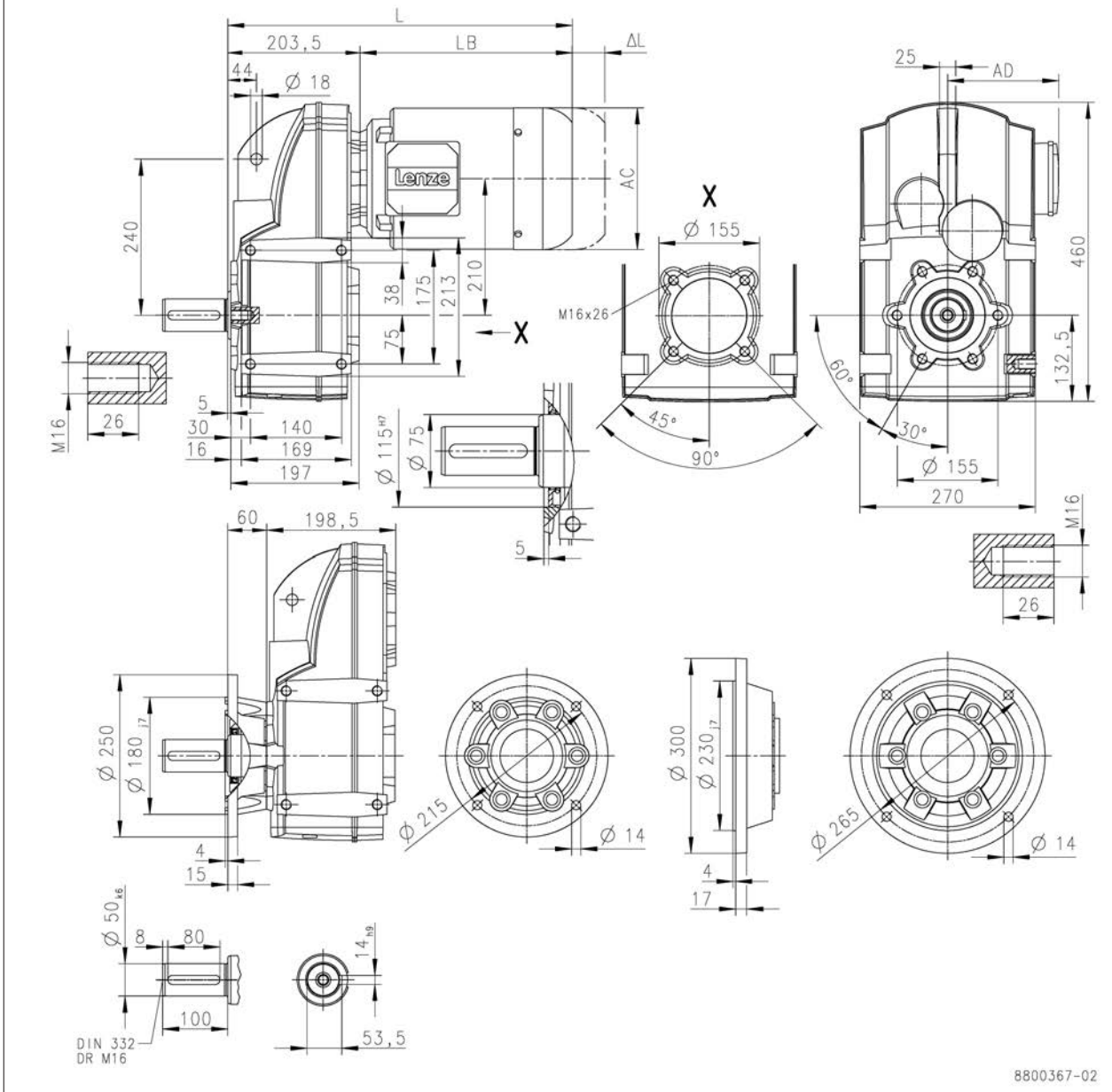

			m550							
			-P80/M4	-P90/M4	-P90/L4	-P100/M4	-P100/L4	-P112/M4	-P132/M4	-P132/L4
Total length	L	[mm]	464	528		588		595	662	
Motor length	LB	[mm]	260	324		384		391	458	
Length of motor options	Δ L	[mm]	183	175		170		183	201	
Motor diameter	AC	[mm]	157	177		195		219	261	
Distance motor/connection	AD	[mm]	148	154		164		171	182	

L = length of the motor without built-on accessories
ΔL = additional length of the built-on accessories (longest type)

Dimensions, 4-pole motors

g500-S2100

Dimensions with solid shaft
Gearbox design: VBR, VAR, VAK

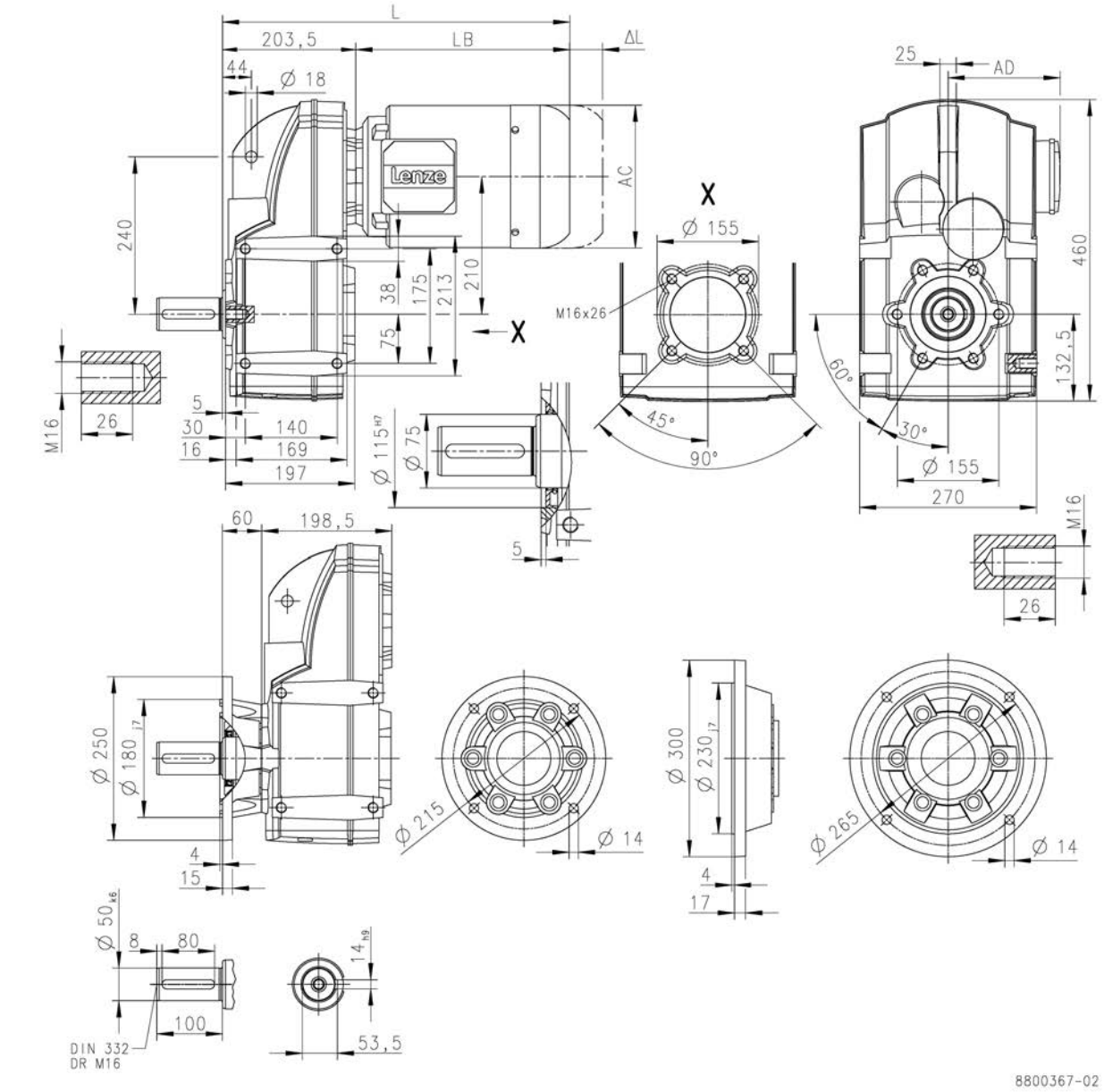

			m550				
			-P160/M4	-P160/L4	-P180/M4	-P180/L4	-P180/V4
Total length	L	[mm]	773		849		893
Motor length	LB	[mm]	569		645		689
Length of motor options	Δ L	[mm]	237		267		
Motor diameter	AC	[mm]	313		351		
Distance motor/connection	AD	[mm]	231		282		

L = length of the motor without built-on accessories
ΔL = additional length of the built-on accessories (longest type)

Dimensions, 4-pole motors

g500-S3100

Dimensions with hollow shaft
Gearbox design: HBR, HAR, HAK

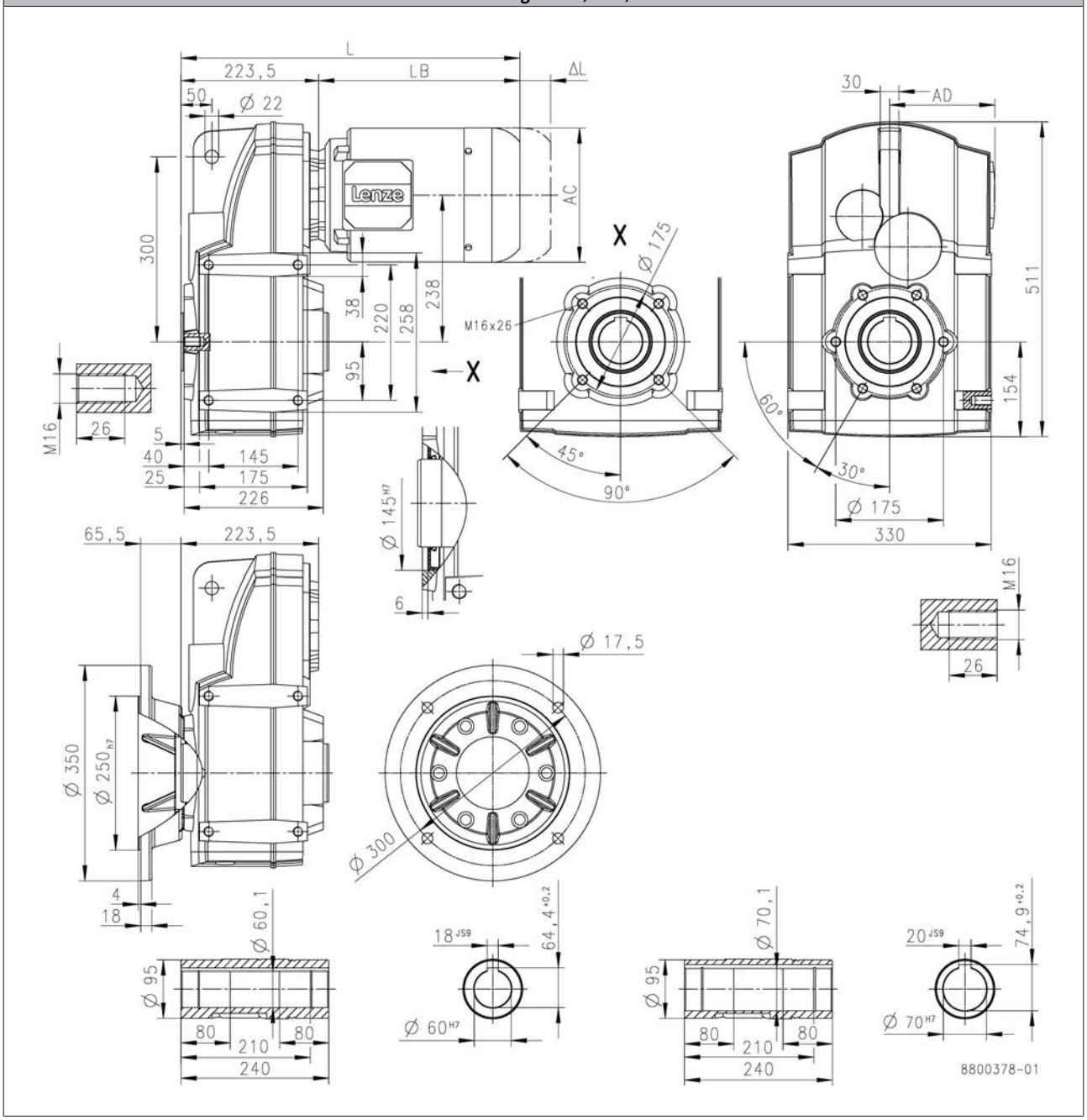

			MD□MA□□		
			063-42	071-32	071-42
Total length	L	[mm]	407	427	
Motor length	LB	[mm]	183	203	
Length of motor options	Δ L	[mm]	170	165	
Motor diameter	AC	[mm]	123	139	
Distance motor/connection	AD	[mm]	100	109	

L = length of the motor without built-on accessories
ΔL = additional length of the built-on accessories (longest type)

Dimensions, 4-pole motors

g500-S3100

Dimensions with hollow shaft
Gearbox design: HBR, HAR, HAK

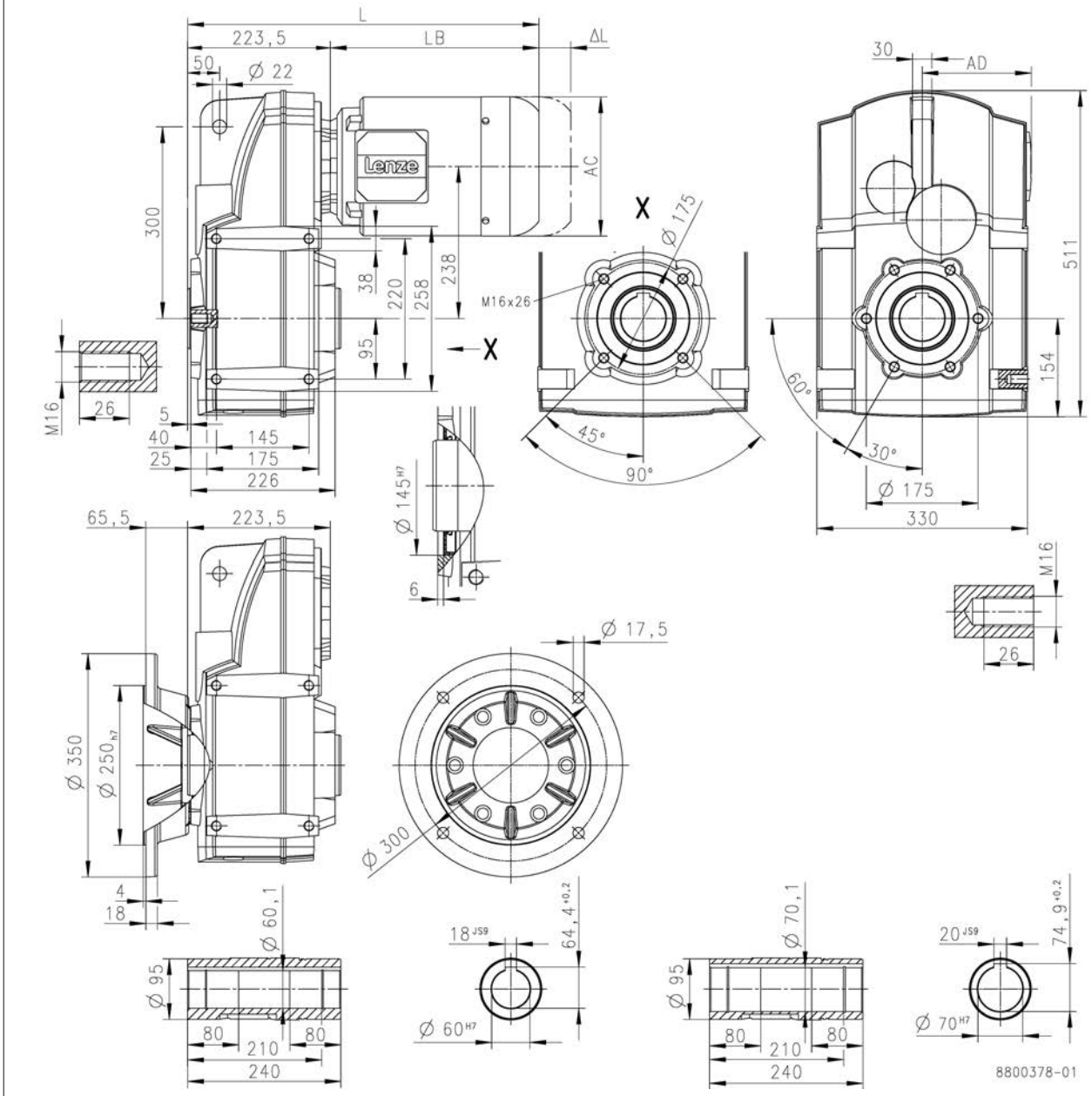

			m550							
			-P80/M4	-P90/M4	-P90/L4	-P100/M4	-P100/L4	-P112/M4	-P132/M4	-P132/L4
Total length	L	[mm]	484	548		608		615	682	
Motor length	LB	[mm]	260	324		384		391	458	
Length of motor options	Δ L	[mm]	183	175		170		183	201	
Motor diameter	AC	[mm]	157	177		195		219	261	
Distance motor/connection	AD	[mm]	148	154		164		171	182	

L = length of the motor without built-on accessories
ΔL = additional length of the built-on accessories (longest type)

Dimensions, 4-pole motors

g500-S3100

Dimensions with hollow shaft
Gearbox design: HBR, HAR, HAK

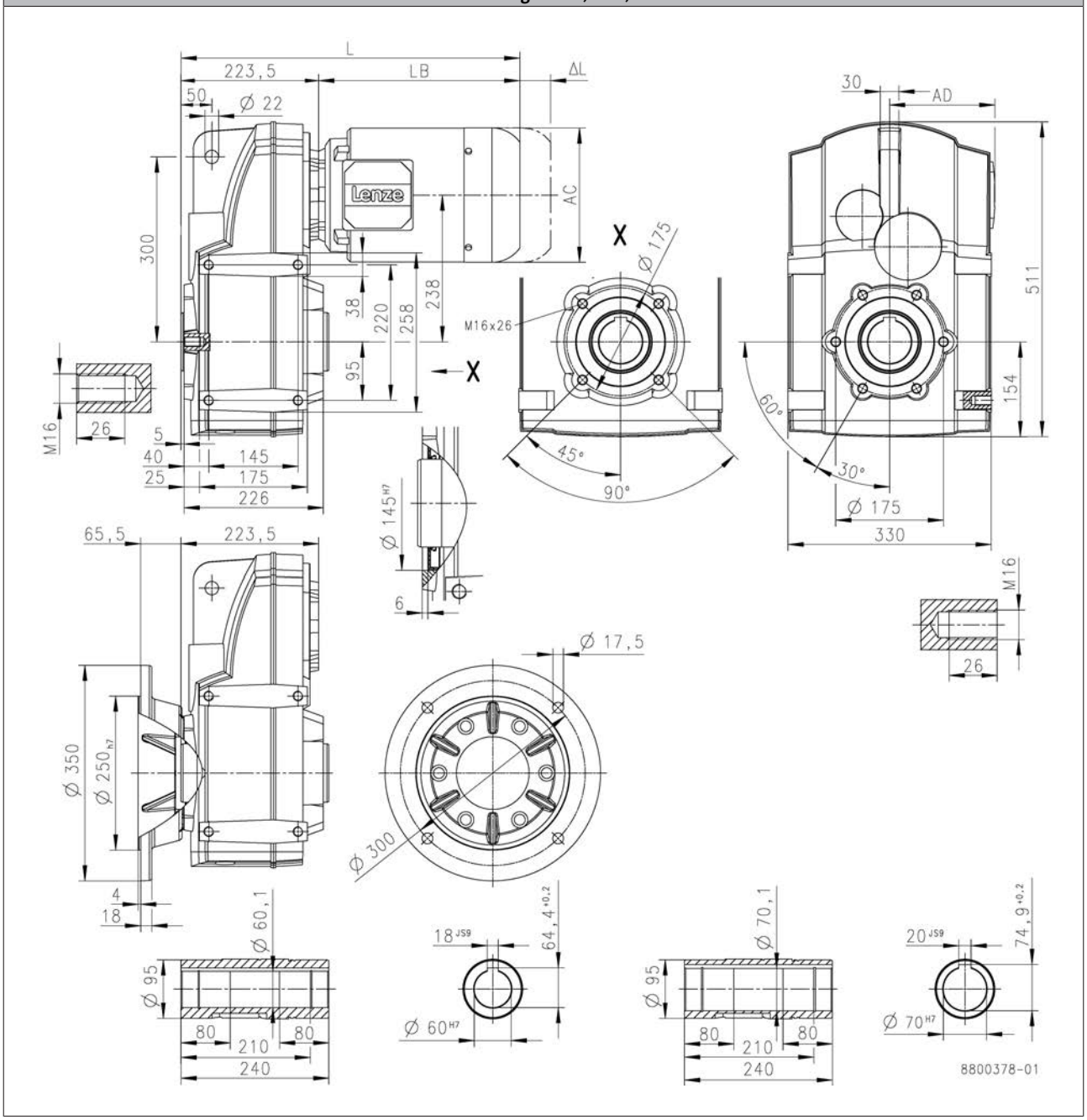

			m550				
			-P160/M4	-P160/L4	-P180/M4	-P180/L4	-P180/V4
Total length	L	[mm]	793		869		913
Motor length	LB	[mm]	569		645		689
Length of motor options	Δ L	[mm]	237		267		
Motor diameter	AC	[mm]	313		351		
Distance motor/connection	AD	[mm]	231		282		

L = length of the motor without built-on accessories
ΔL = additional length of the built-on accessories (longest type)

Dimensions, 4-pole motors

g500-S3100

Dimensions hollow shaft with shrink disc
Gearbox design: SBR, SAR, SAK

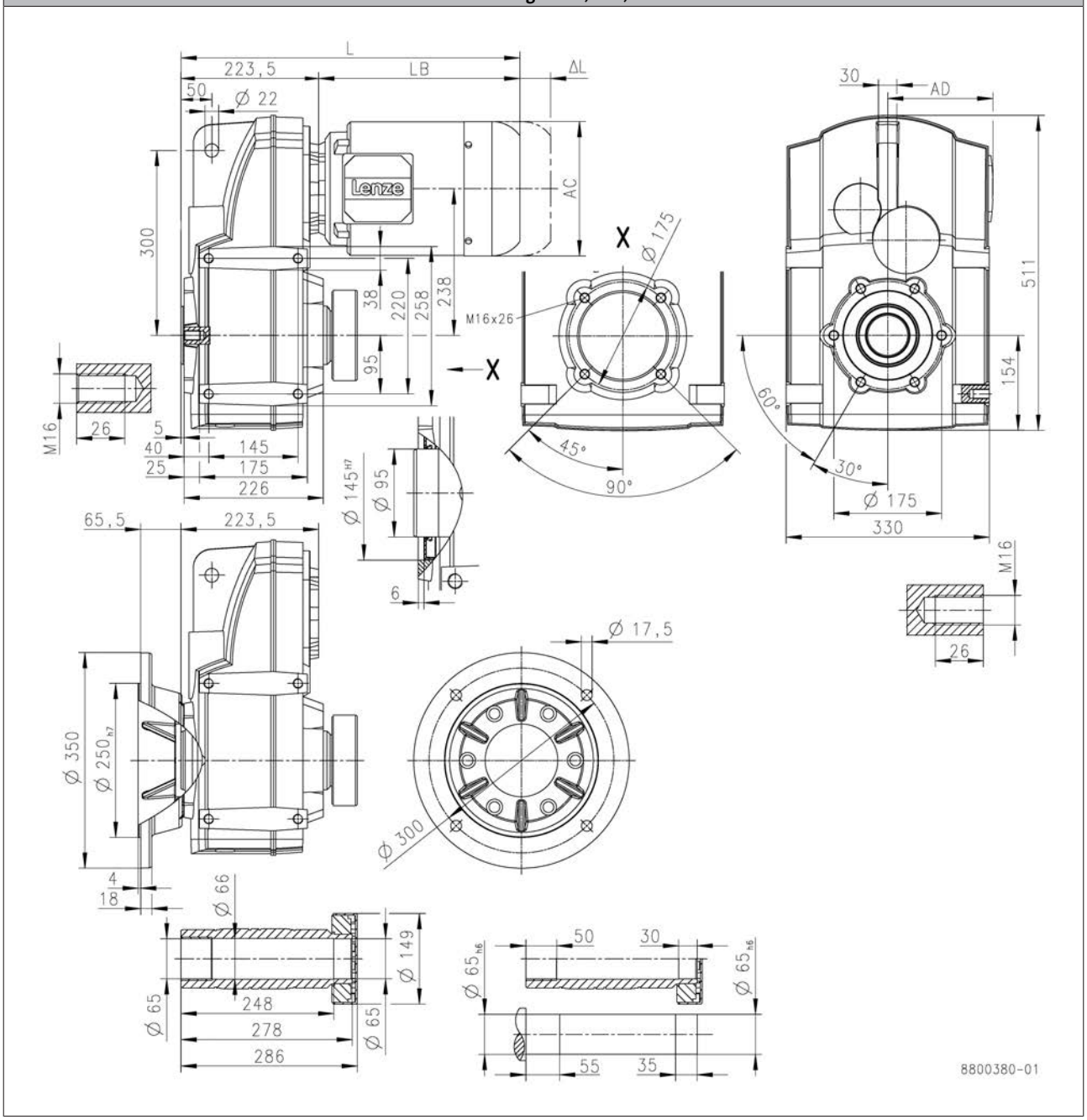

			MD□MA□□		
			063-42	071-32	071-42
Total length	L	[mm]	407	427	
Motor length	LB	[mm]	183	203	
Length of motor options	Δ L	[mm]	170	165	
Motor diameter	AC	[mm]	123	139	
Distance motor/connection	AD	[mm]	100	109	

L = length of the motor without built-on accessories
ΔL = additional length of the built-on accessories (longest type)

1 - Shrink disc dimensions

Dimensions, 4-pole motors

g500-S3100

Dimensions hollow shaft with shrink disc
Gearbox design: SBR, SAR, SAK

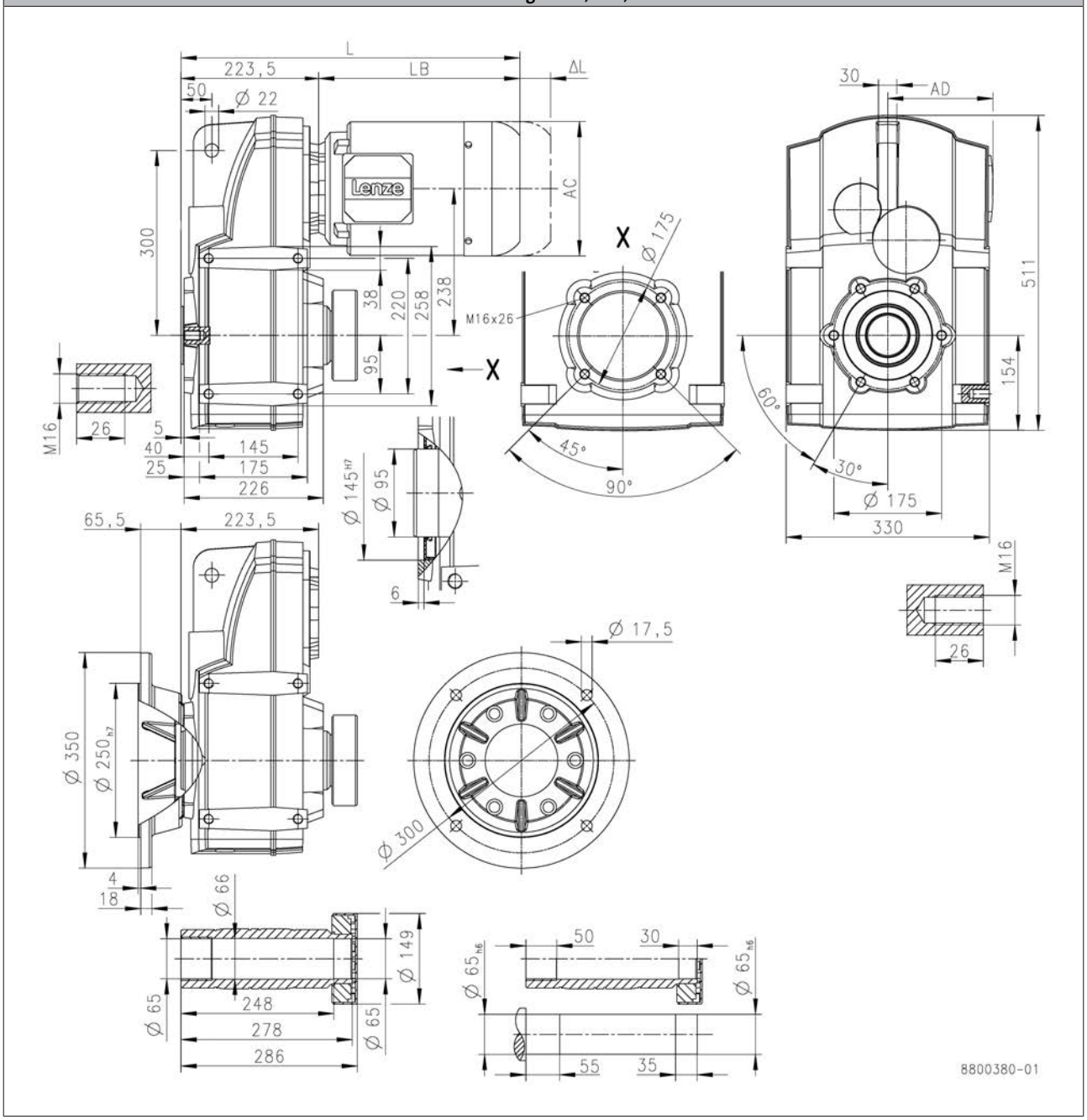

			m550							
			-P80/M4	-P90/M4	-P90/L4	-P100/M4	-P100/L4	-P112/M4	-P132/M4	-P132/L4
Total length	L	[mm]	484	548		608		615	682	
Motor length	LB	[mm]	260	324		384		391	458	
Length of motor options	Δ L	[mm]	183	175		170		183	201	
Motor diameter	AC	[mm]	157	177		195		219	261	
Distance motor/connection	AD	[mm]	148	154		164		171	182	

L = length of the motor without built-on accessories
ΔL = additional length of the built-on accessories (longest type)

1 - Shrink disc dimensions

Dimensions, 4-pole motors

g500-S3100

Dimensions hollow shaft with shrink disc
Gearbox design: SBR, SAR, SAK

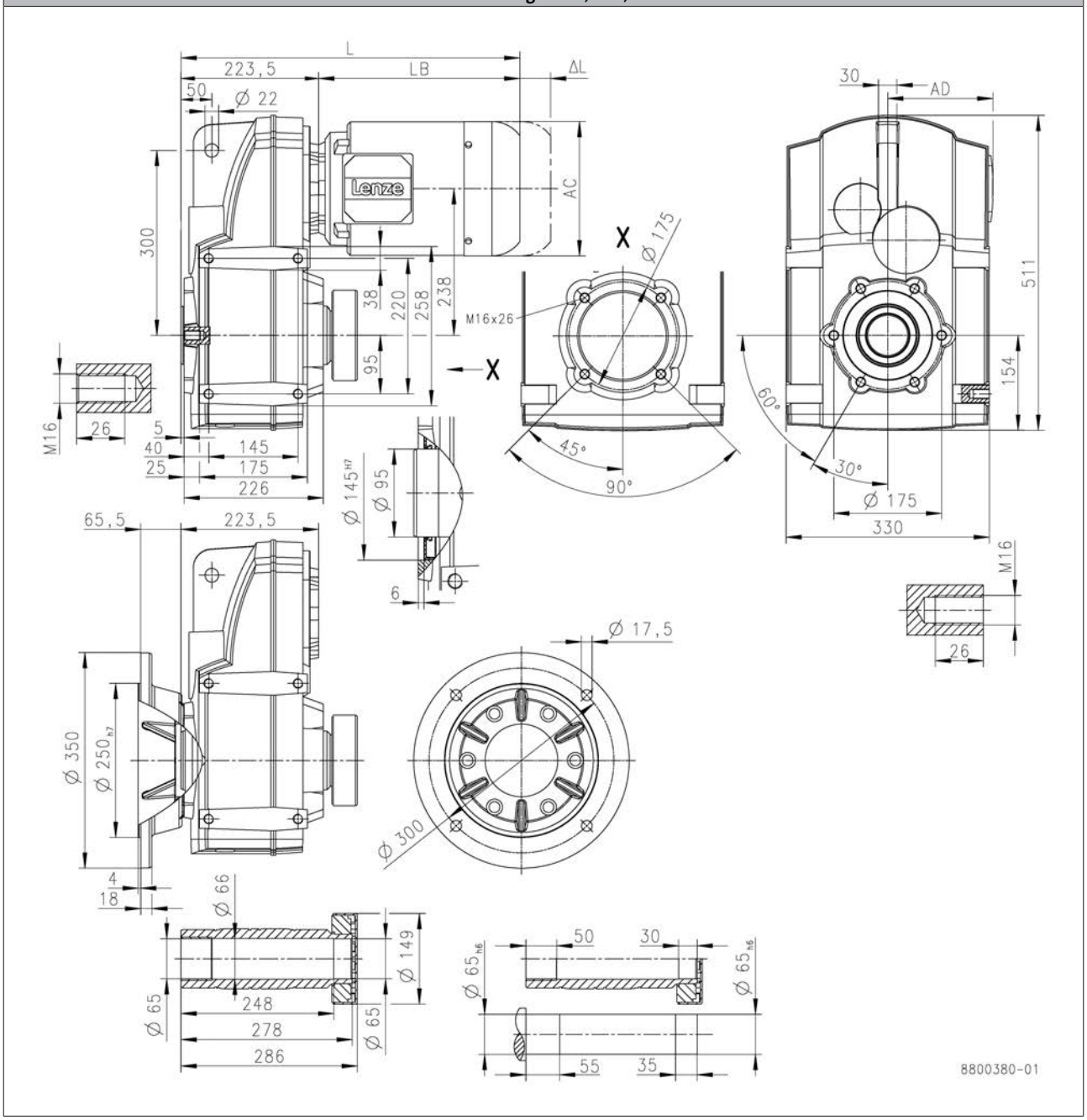

			m550				
			-P160/M4	-P160/L4	-P180/M4	-P180/L4	-P180/V4
Total length	L	[mm]	793		869		913
Motor length	LB	[mm]	569		645		689
Length of motor options	Δ L	[mm]	237		267		
Motor diameter	AC	[mm]	313		351		
Distance motor/connection	AD	[mm]	231		282		

L = length of the motor without built-on accessories
ΔL = additional length of the built-on accessories (longest type)

1 - Shrink disc dimensions

Dimensions, 4-pole motors

g500-S3100

Dimensions with solid shaft
Gearbox design: VBR, VAR, VAK

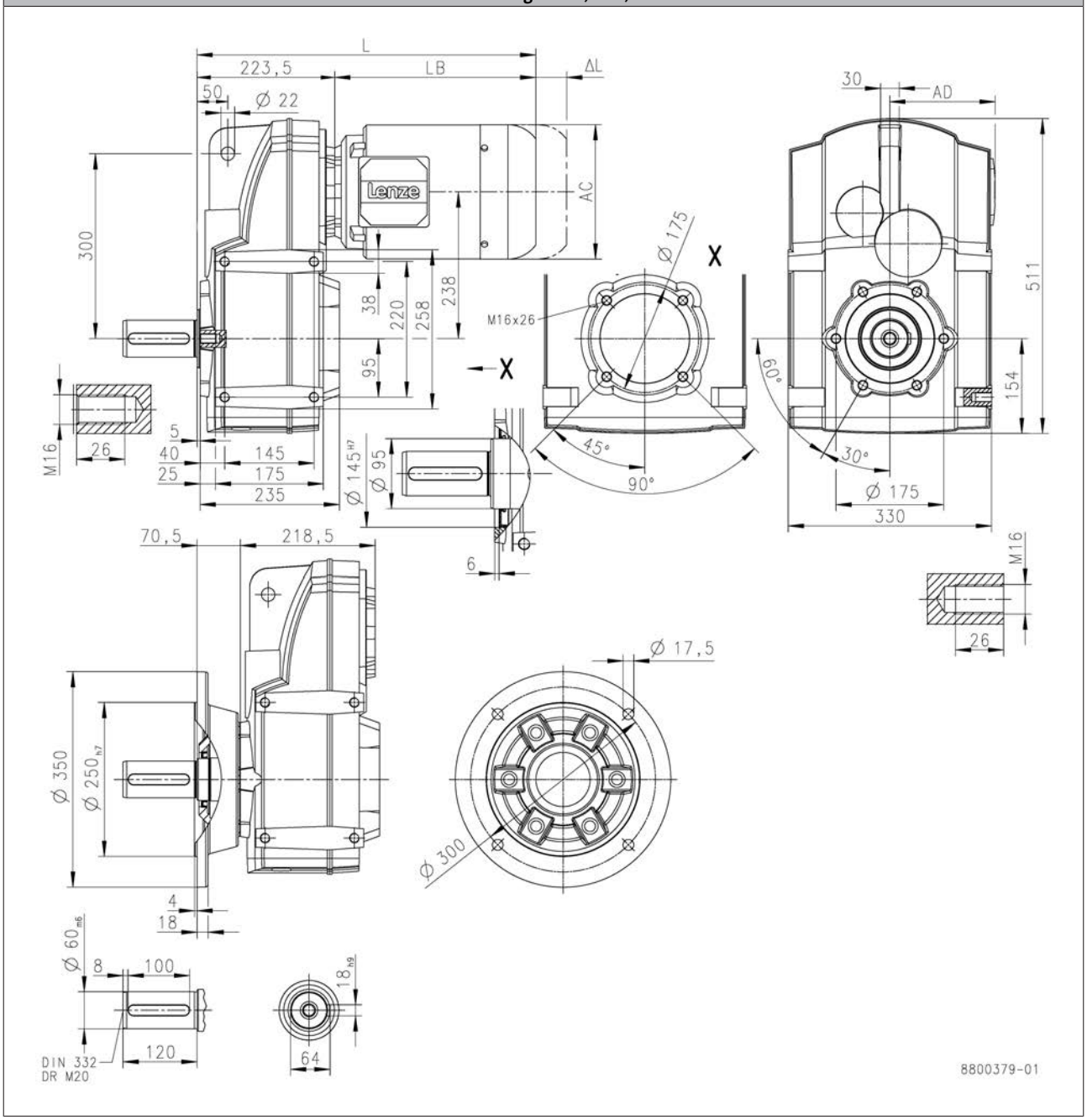

			MD□MA□□		
			063-42	071-32	071-42
Total length	L	[mm]	407	427	
Motor length	LB	[mm]	183	203	
Length of motor options	Δ L	[mm]	170	165	
Motor diameter	AC	[mm]	123	139	
Distance motor/connection	AD	[mm]	100	109	

L = length of the motor without built-on accessories
ΔL = additional length of the built-on accessories (longest type)

Dimensions, 4-pole motors

g500-S3100

Dimensions with solid shaft
Gearbox design: VBR, VAR, VAK

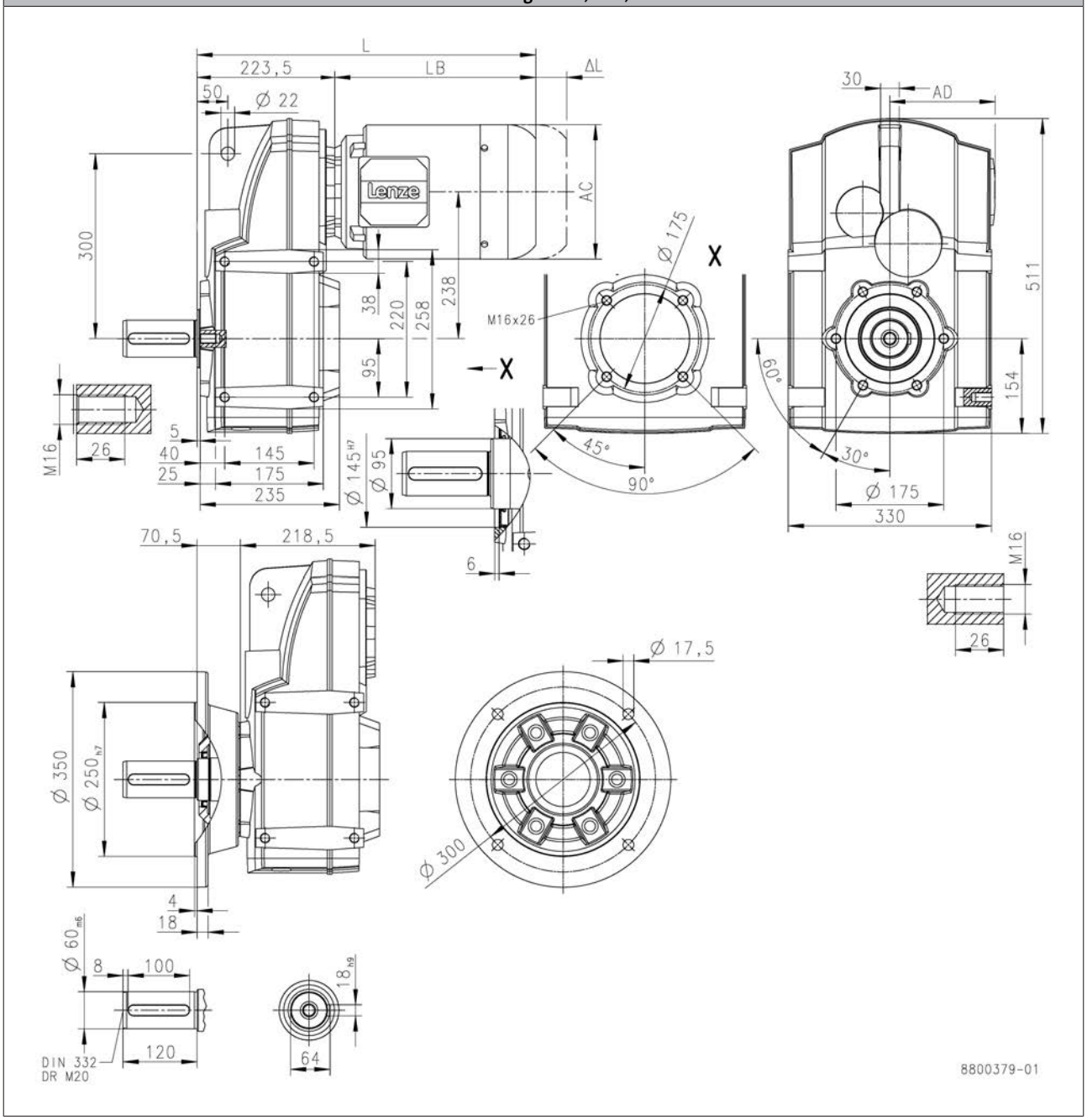

			m550							
			-P80/M4	-P90/M4	-P90/L4	-P100/M4	-P100/L4	-P112/M4	-P132/M4	-P132/L4
Total length	L	[mm]	484	548		608		615	682	
Motor length	LB	[mm]	260	324		384		391	458	
Length of motor options	Δ L	[mm]	183	175		170		183	201	
Motor diameter	AC	[mm]	157	177		195		219	261	
Distance motor/connection	AD	[mm]	148	154		164		171	182	

L = length of the motor without built-on accessories
ΔL = additional length of the built-on accessories (longest type)

Dimensions, 4-pole motors

g500-S3100

Dimensions with solid shaft
Gearbox design: VBR, VAR, VAK

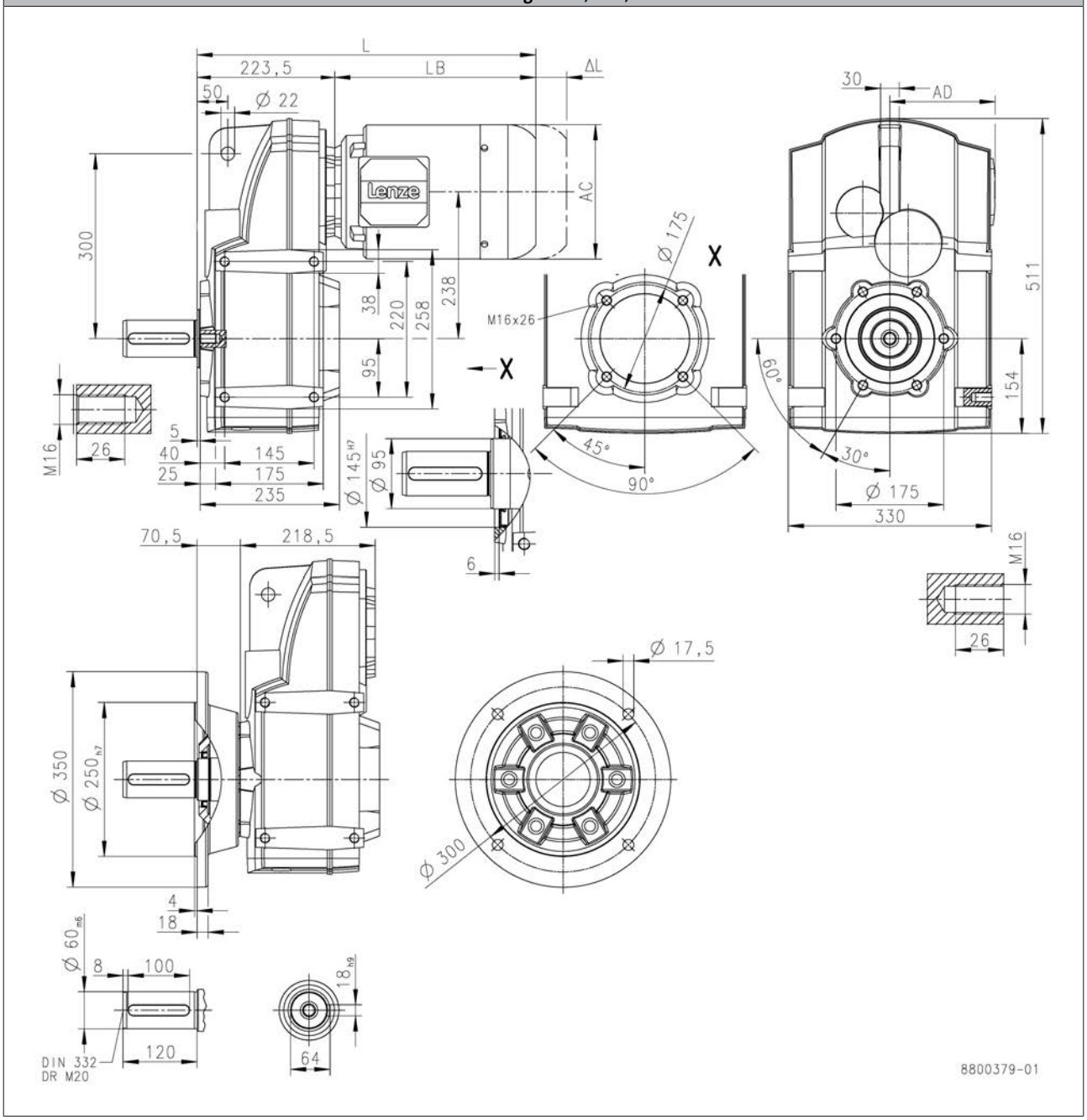

			m550				
			-P160/M4	-P160/L4	-P180/M4	-P180/L4	-P180/V4
Total length	L	[mm]	793		869		913
Motor length	LB	[mm]	569		645		689
Length of motor options	Δ L	[mm]	237		267		
Motor diameter	AC	[mm]	313		351		
Distance motor/connection	AD	[mm]	231		282		

L = length of the motor without built-on accessories
ΔL = additional length of the built-on accessories (longest type)

Dimensions, 4-pole motors

g500-S4500

Dimensions with hollow shaft
Gearbox design: HBR, HAR, HAK

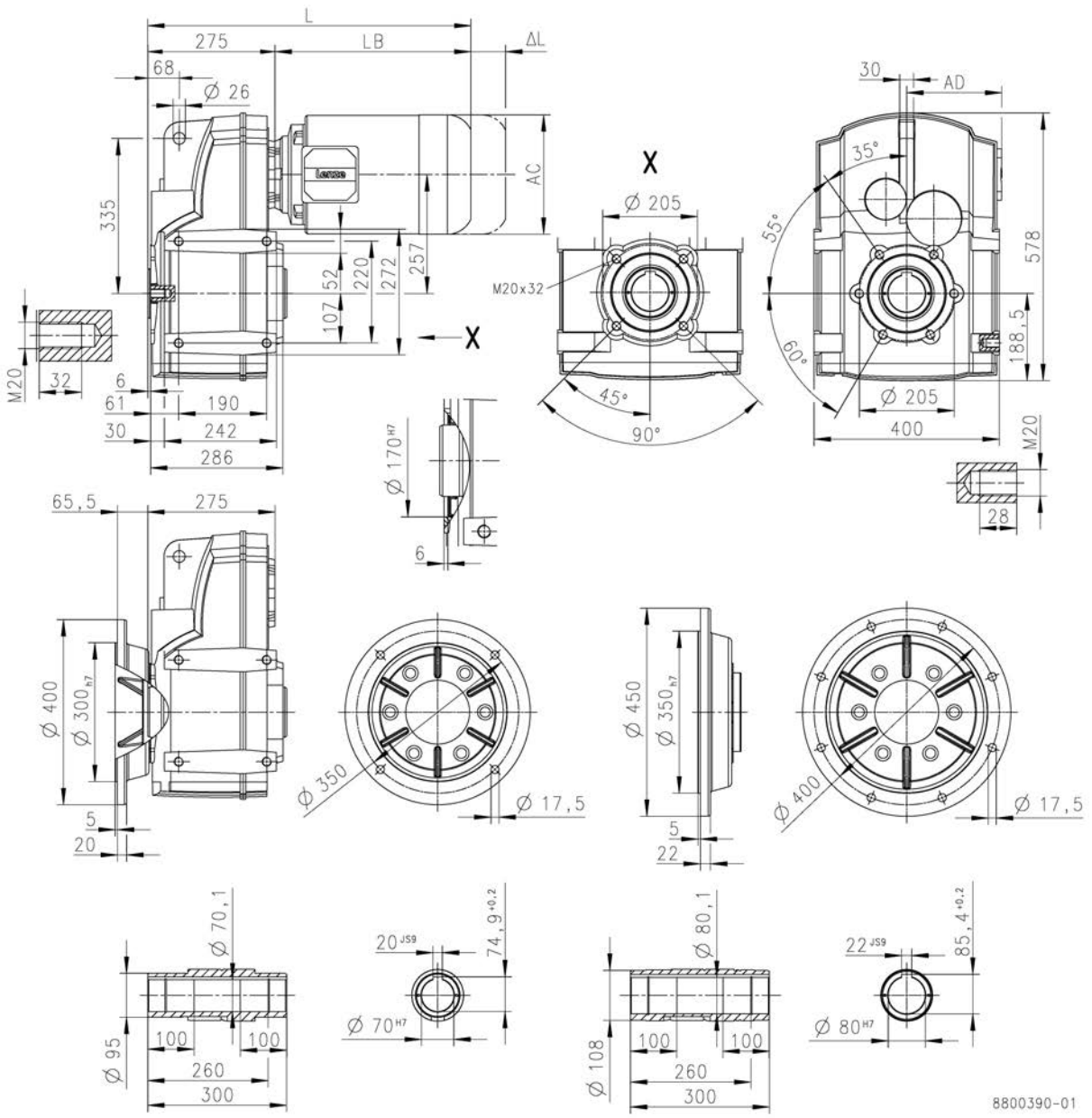

			MD□MA□□	m550				
			071-42	-P80/M4	-P90/M4	-P90/L4	-P100/M4	-P100/L4
Total length	L	[mm]	478	535	599		659	
Motor length	LB	[mm]	203	260	324		384	
Length of motor options	Δ L	[mm]	165	183	175		170	
Motor diameter	AC	[mm]	139	157	177		195	
Distance motor/connection	AD	[mm]	109	148	154		164	

L = length of the motor without built-on accessories
ΔL = additional length of the built-on accessories (longest type)

Dimensions, 4-pole motors

g500-S4500

Dimensions with hollow shaft
Gearbox design: HBR, HAR, HAK

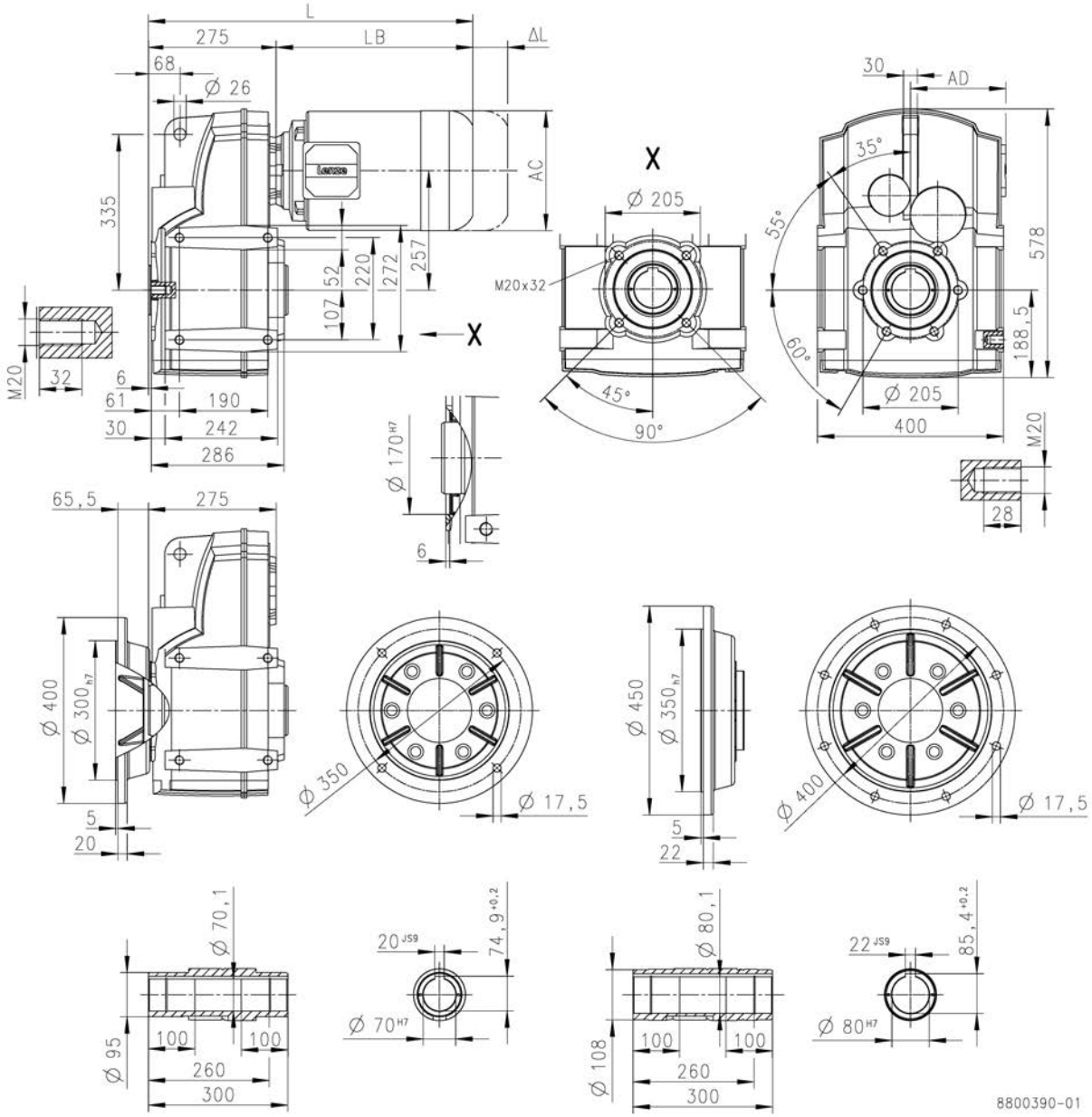

			m550							
			-P112/M4	-P132/M4	-P132/L4	-P160/M4	-P160/L4	-P180/M4	-P180/L4	-P180/V4
Total length	L	[mm]	666	733		844		920		964
Motor length	LB	[mm]	391	458		569		645		689
Length of motor options	Δ L	[mm]	183	201		237		267		
Motor diameter	AC	[mm]	219	261		313		351		
Distance motor/connection	AD	[mm]	171	182		231		282		

L = length of the motor without built-on accessories
ΔL = additional length of the built-on accessories (longest type)

Dimensions, 4-pole motors

g500-S4500

Dimensions hollow shaft with shrink disc
Gearbox design: SBR, SAR, SAK

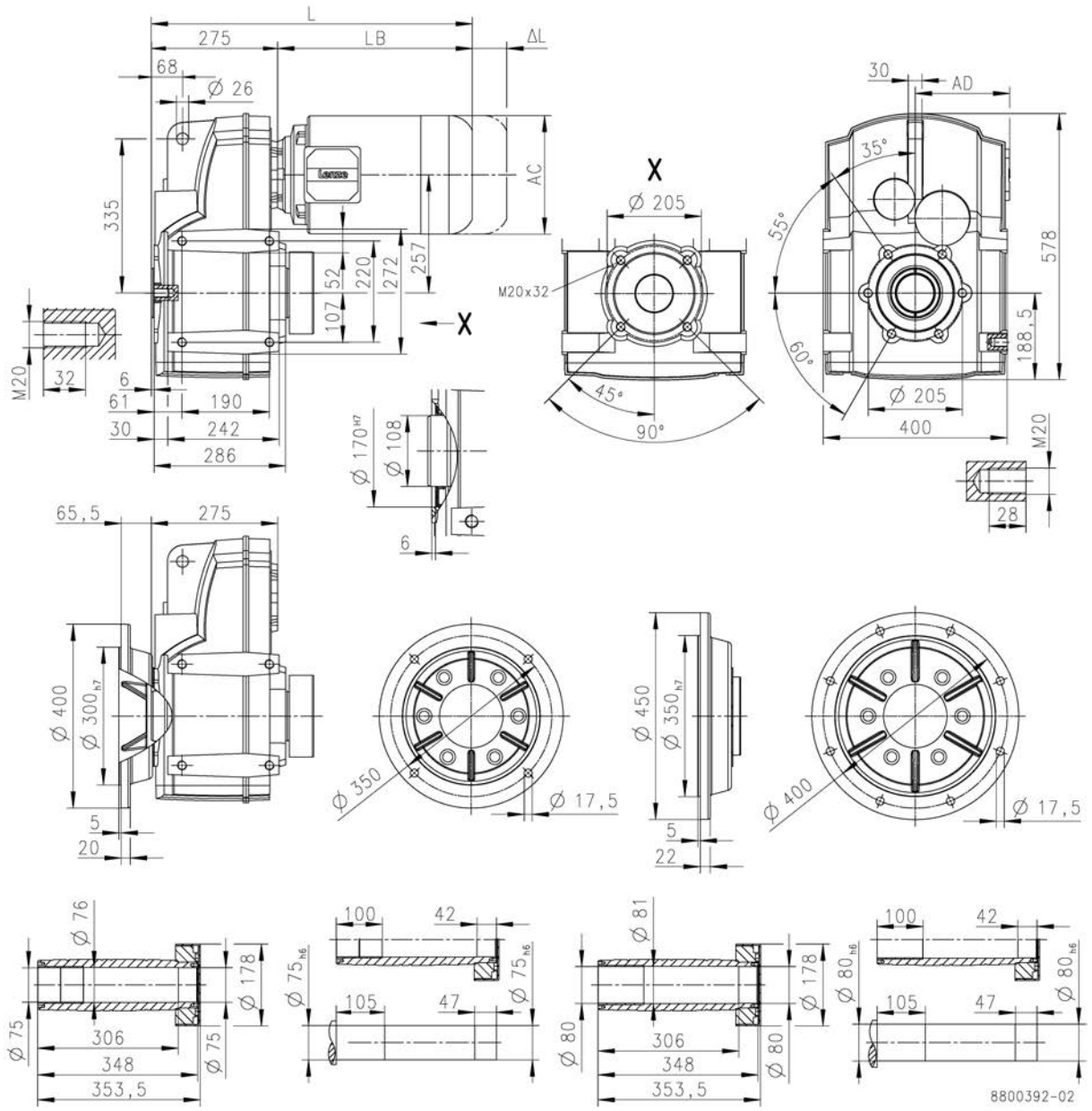

			MD□MA□□	m550				
			071-42	-P80/M4	-P90/M4	-P90/L4	-P100/M4	-P100/L4
Total length	L	[mm]	478	535	599		659	
Motor length	LB	[mm]	203	260	324		384	
Length of motor options	Δ L	[mm]	165	183	175		170	
Motor diameter	AC	[mm]	139	157	177		195	
Distance motor/connection	AD	[mm]	109	148	154		164	

L = length of the motor without built-on accessories
ΔL = additional length of the built-on accessories (longest type)

1 - Shrink disc dimensions

Dimensions, 4-pole motors

g500-S4500

Dimensions hollow shaft with shrink disc
Gearbox design: SBR, SAR, SAK

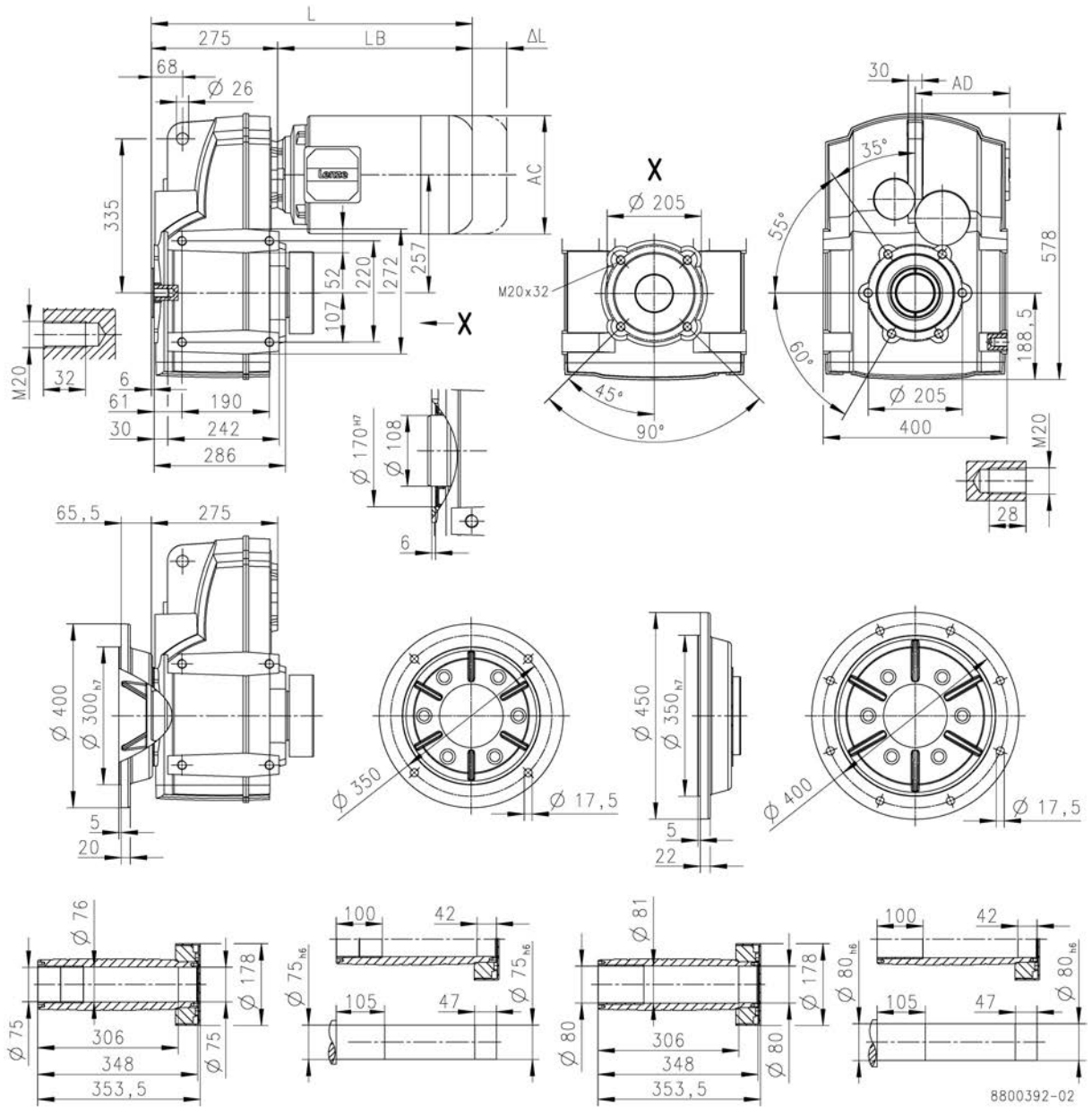

			m550							
			-P112/M4	-P132/M4	-P132/L4	-P160/M4	-P160/L4	-P180/M4	-P180/L4	-P180/V4
Total length	L	[mm]	666	733		844		920		964
Motor length	LB	[mm]	391	458		569		645		689
Length of motor options	Δ L	[mm]	183	201		237		267		
Motor diameter	AC	[mm]	219	261		313		351		
Distance motor/connection	AD	[mm]	171	182		231		282		

L = length of the motor without built-on accessories
ΔL = additional length of the built-on accessories (longest type)

1 - Shrink disc dimensions

Dimensions, 4-pole motors

g500-S4500

Dimensions with solid shaft
Gearbox design: VBR, VAR, VAK

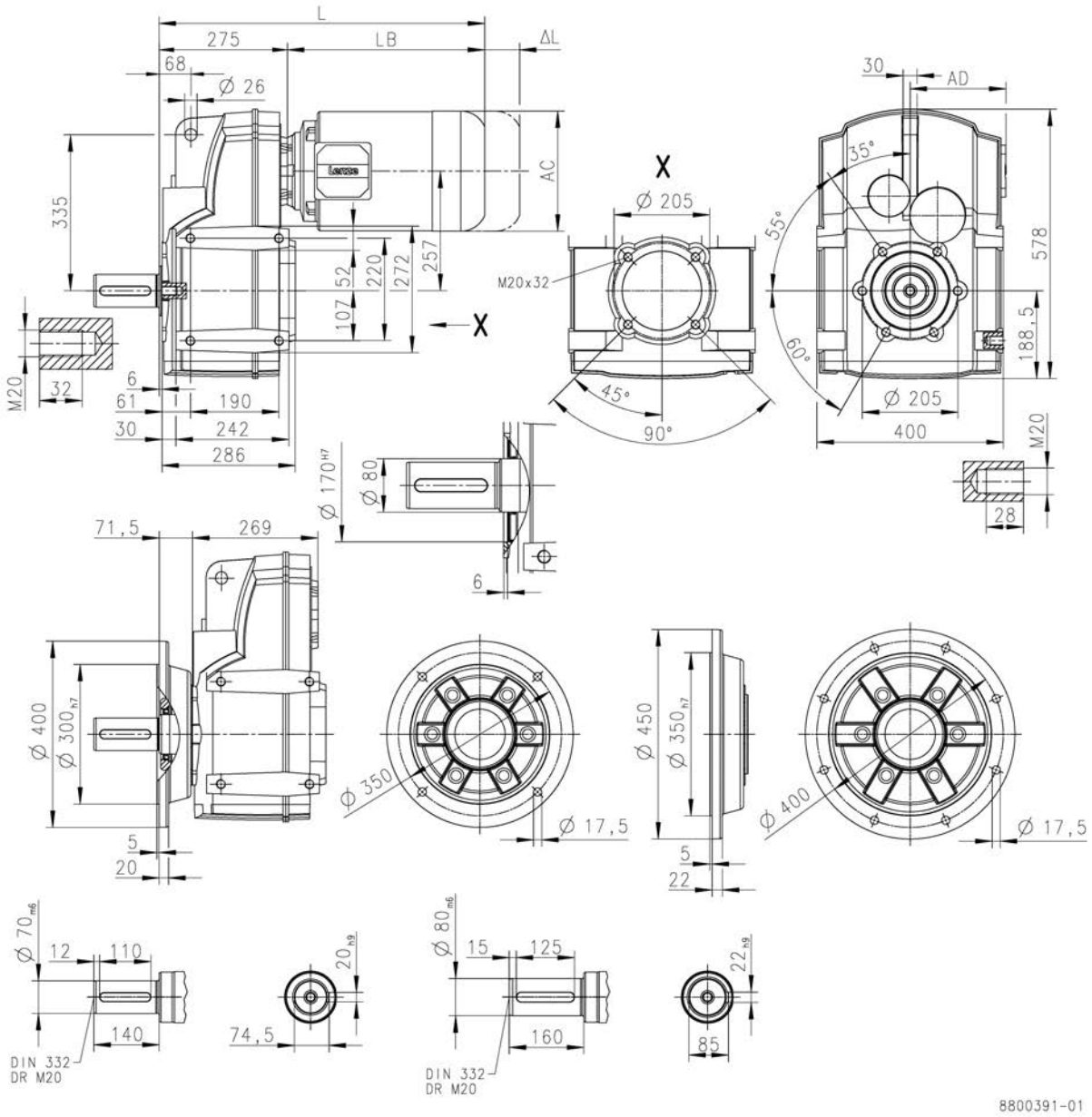

			MD□MA□□	m550				
			071-42	-P80/M4	-P90/M4	-P90/L4	-P100/M4	-P100/L4
Total length	L	[mm]	478	535	599		659	
Motor length	LB	[mm]	203	260	324		384	
Length of motor options	Δ L	[mm]	165	183	175		170	
Motor diameter	AC	[mm]	139	157	177		195	
Distance motor/connection	AD	[mm]	109	148	154		164	

L = length of the motor without built-on accessories
ΔL = additional length of the built-on accessories (longest type)

Dimensions, 4-pole motors

g500-S4500

Dimensions with solid shaft
Gearbox design: VBR, VAR, VAK

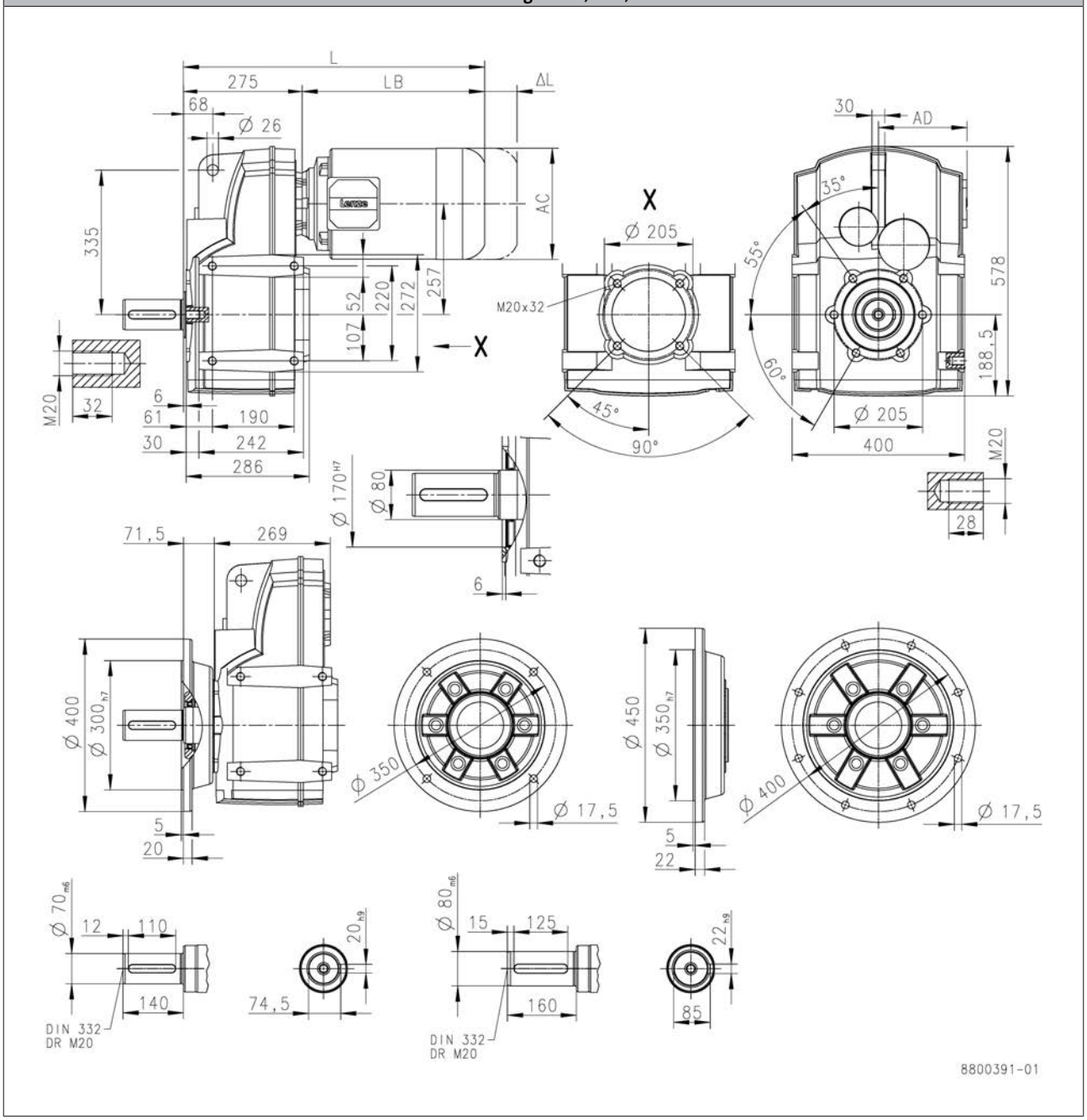

			m550							
			-P112/M4	-P132/M4	-P132/L4	-P160/M4	-P160/L4	-P180/M4	-P180/L4	-P180/V4
Total length	L	[mm]	666	733		844		920		964
Motor length	LB	[mm]	391	458		569		645		689
Length of motor options	Δ L	[mm]	183	201		237		267		
Motor diameter	AC	[mm]	219	261		313		351		
Distance motor/connection	AD	[mm]	171	182		231		282		

L = length of the motor without built-on accessories
ΔL = additional length of the built-on accessories (longest type)

Dimensions, 4-pole motors

g500-S8000

Dimensions with hollow shaft
Gearbox design: HBR, HAR, HAK

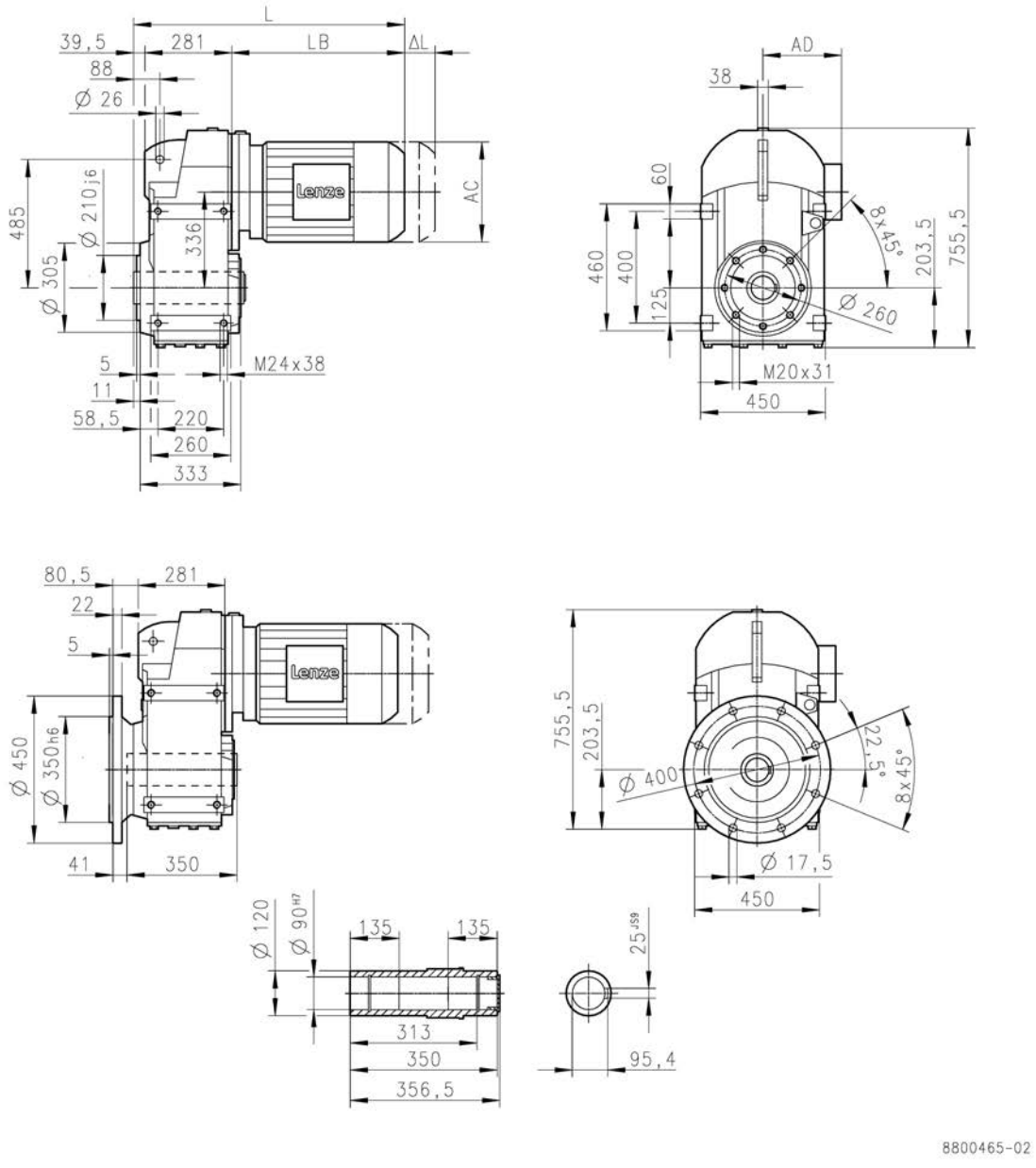

			m540							
			-P100/M4	-P100/L4	-P112/M4	-P132/M4	-P132/L4	-P160/M4	-P160/L4	-P180/M4
Total length	L	[mm]	712			783		815	875	888
Motor length	LB	[mm]	391			462		494	554	567
Length of motor options	Δ L	[mm]	219		206	259		285		274
Motor diameter	AC	[mm]	198		222	264		318		353
Distance motor/connection	AD	[mm]	171		182	207		241		292

L = length of the motor without built-on accessories
ΔL = additional length of the built-on accessories (longest type)

Dimensions, 4-pole motors

g500-S8000

Dimensions with hollow shaft
Gearbox design: HBR, HAR, HAK

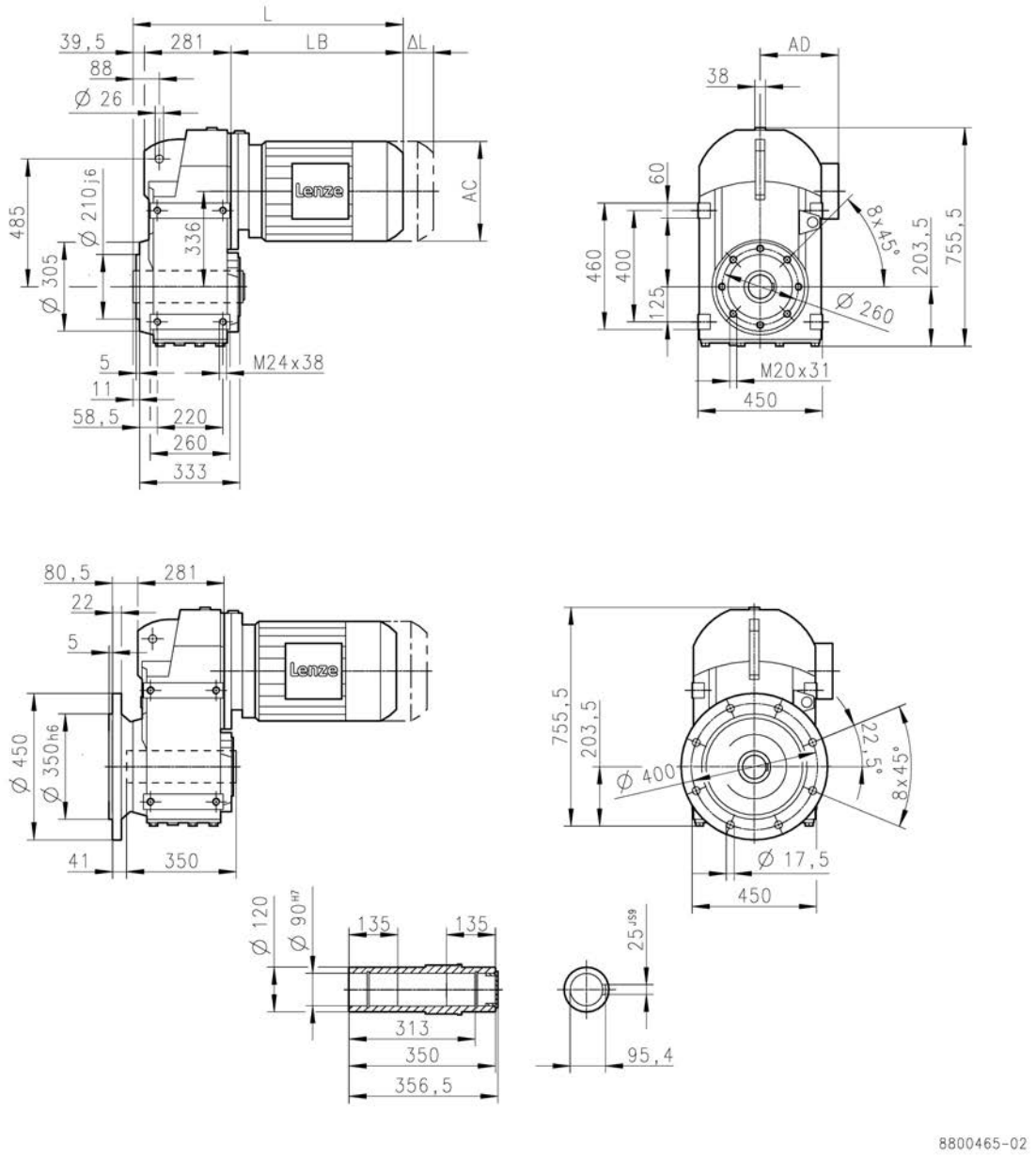

			m540			
			-P180/L4	-P200/M4	-P225/M4	-P225/L4
Total length	L	[mm]	918	981	1001	1061
Motor length	LB	[mm]	597	660	681	741
Length of motor options	Δ L	[mm]	274	293	787	
Motor diameter	AC	[mm]	353	393	439	
Distance motor/connection	AD	[mm]	292	315	337	

L = length of the motor without built-on accessories
ΔL = additional length of the built-on accessories (longest type)

Dimensions, 4-pole motors

g500-S8000

Dimensions hollow shaft with shrink disc
Gearbox design: SBR, SAR, SAK

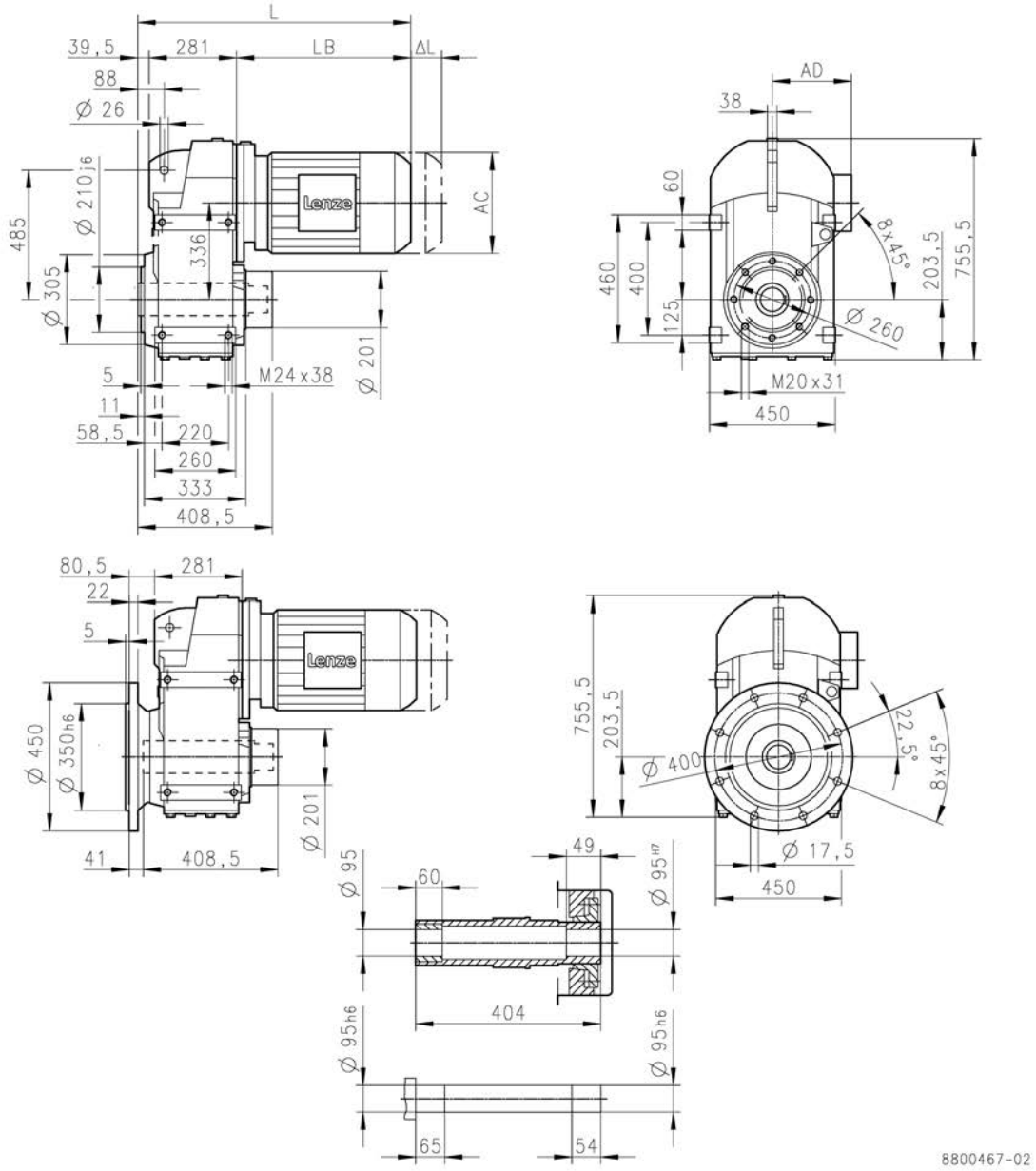

			m540							
			-P100/M4	-P100/L4	-P112/M4	-P132/M4	-P132/L4	-P160/M4	-P160/L4	-P180/M4
Total length	L	[mm]	712			783		815	875	888
Motor length	LB	[mm]	391			462		494	554	567
Length of motor options	Δ L	[mm]	219		206	259		285		274
Motor diameter	AC	[mm]	198		222	264		318		353
Distance motor/connection	AD	[mm]	171		182	207		241		292

L = length of the motor without built-on accessories
ΔL = additional length of the built-on accessories (longest type)

Dimensions, 4-pole motors

g500-S8000

Dimensions hollow shaft with shrink disc
Gearbox design: SBR, SAR, SAK

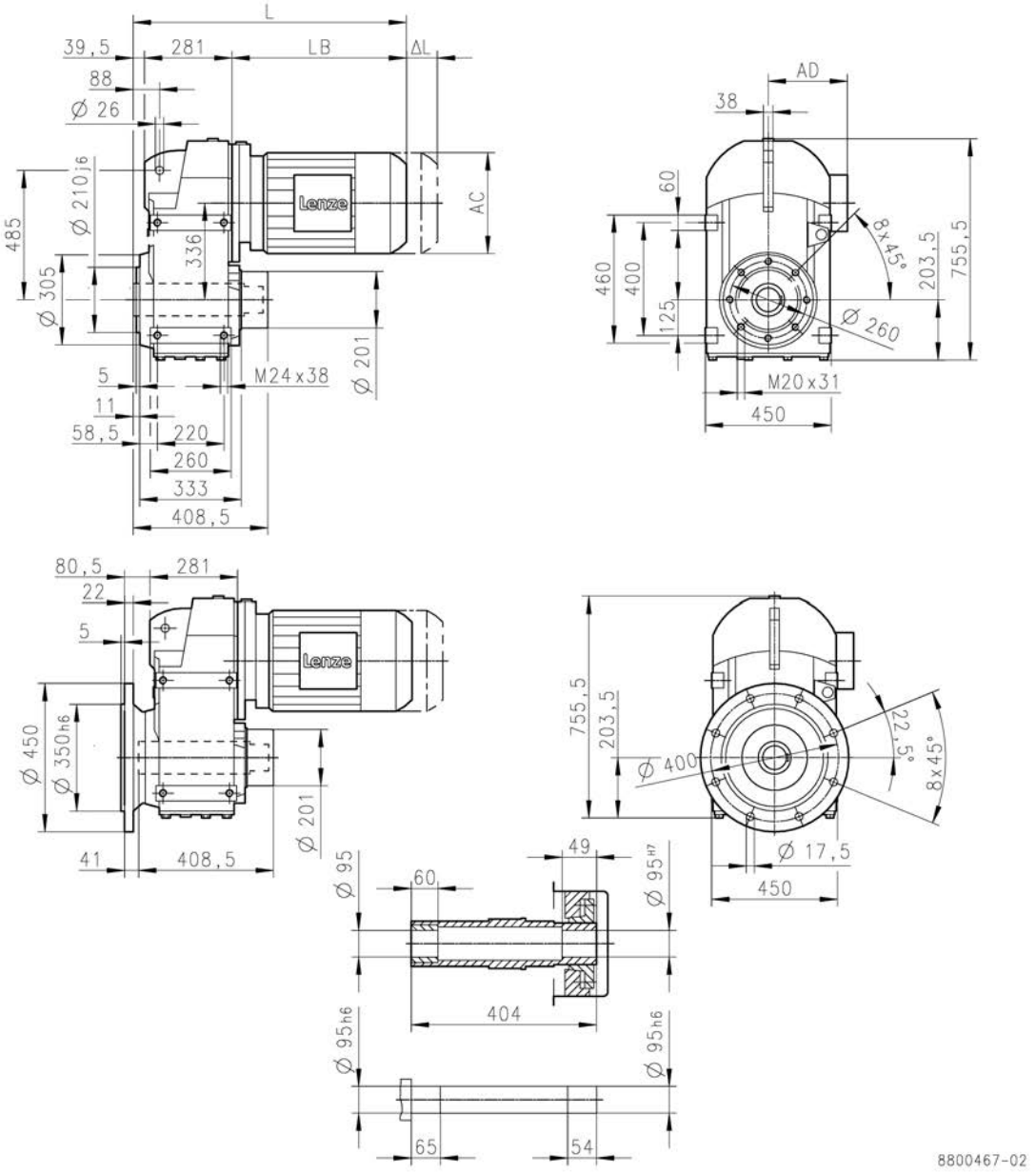

			m540			
			-P180/L4	-P200/M4	-P225/M4	-P225/L4
Total length	L	[mm]	918	981	1001	1061
Motor length	LB	[mm]	597	660	681	741
Length of motor options	Δ L	[mm]	274	293	787	
Motor diameter	AC	[mm]	353	393	439	
Distance motor/connection	AD	[mm]	292	315	337	

L = length of the motor without built-on accessories
ΔL = additional length of the built-on accessories (longest type)

Dimensions, 4-pole motors

g500-S8000

Dimensions with solid shaft
Gearbox design: VBR, VAR, VAK

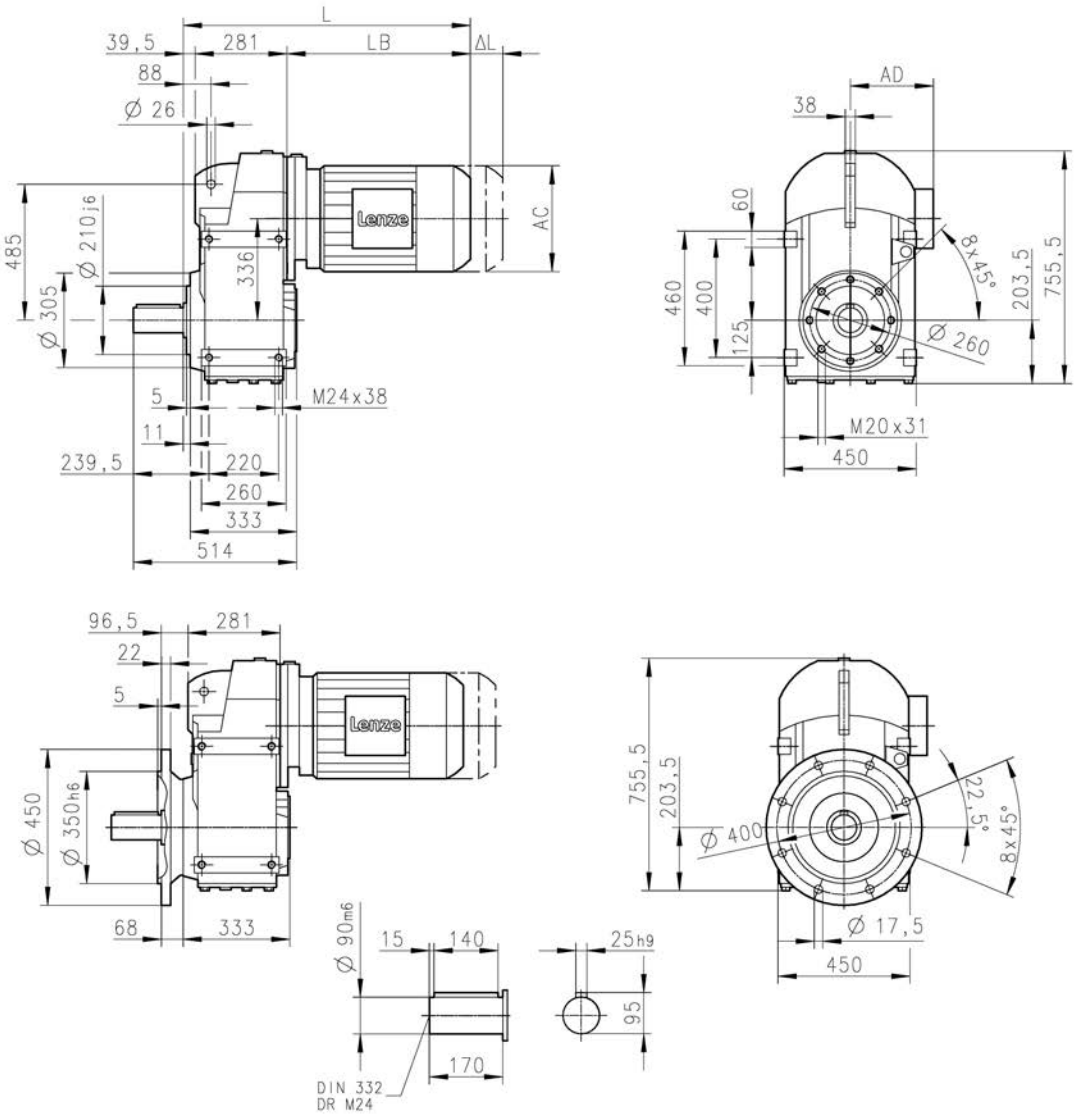

			m540							
			-P100/M4	-P100/L4	-P112/M4	-P132/M4	-P132/L4	-P160/M4	-P160/L4	-P180/M4
Total length	L	[mm]	712			783		815	875	888
Motor length	LB	[mm]	391			462		494	554	567
Length of motor options	Δ L	[mm]	219		206	259		285		274
Motor diameter	AC	[mm]	198		222	264		318		353
Distance motor/connection	AD	[mm]	171		182	207		241		292

L = length of the motor without built-on accessories
ΔL = additional length of the built-on accessories (longest type)

Dimensions, 4-pole motors

g500-S8000

Dimensions with solid shaft
Gearbox design: VBR, VAR, VAK

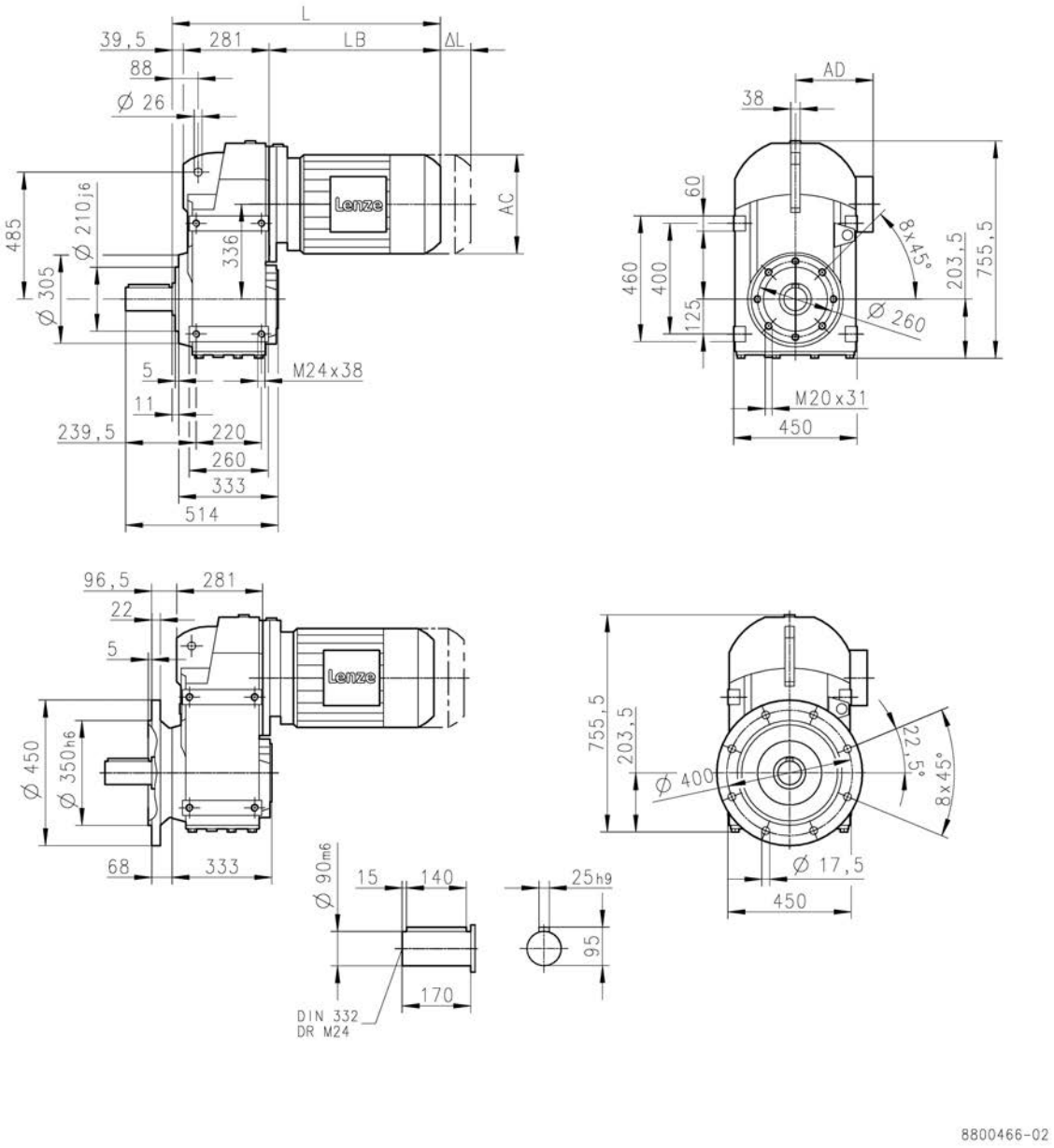

			m540			
			-P180/L4	-P200/M4	-P225/M4	-P225/L4
Total length	L	[mm]	918	981	1001	1061
Motor length	LB	[mm]	597	660	681	741
Length of motor options	Δ L	[mm]	274	293	787	
Motor diameter	AC	[mm]	353	393	439	
Distance motor/connection	AD	[mm]	292	315	337	

L = length of the motor without built-on accessories
ΔL = additional length of the built-on accessories (longest type)

Dimensions, 4-pole motors

g500-S14000

Dimensions with hollow shaft
Gearbox design: HBR, HAR, HAK

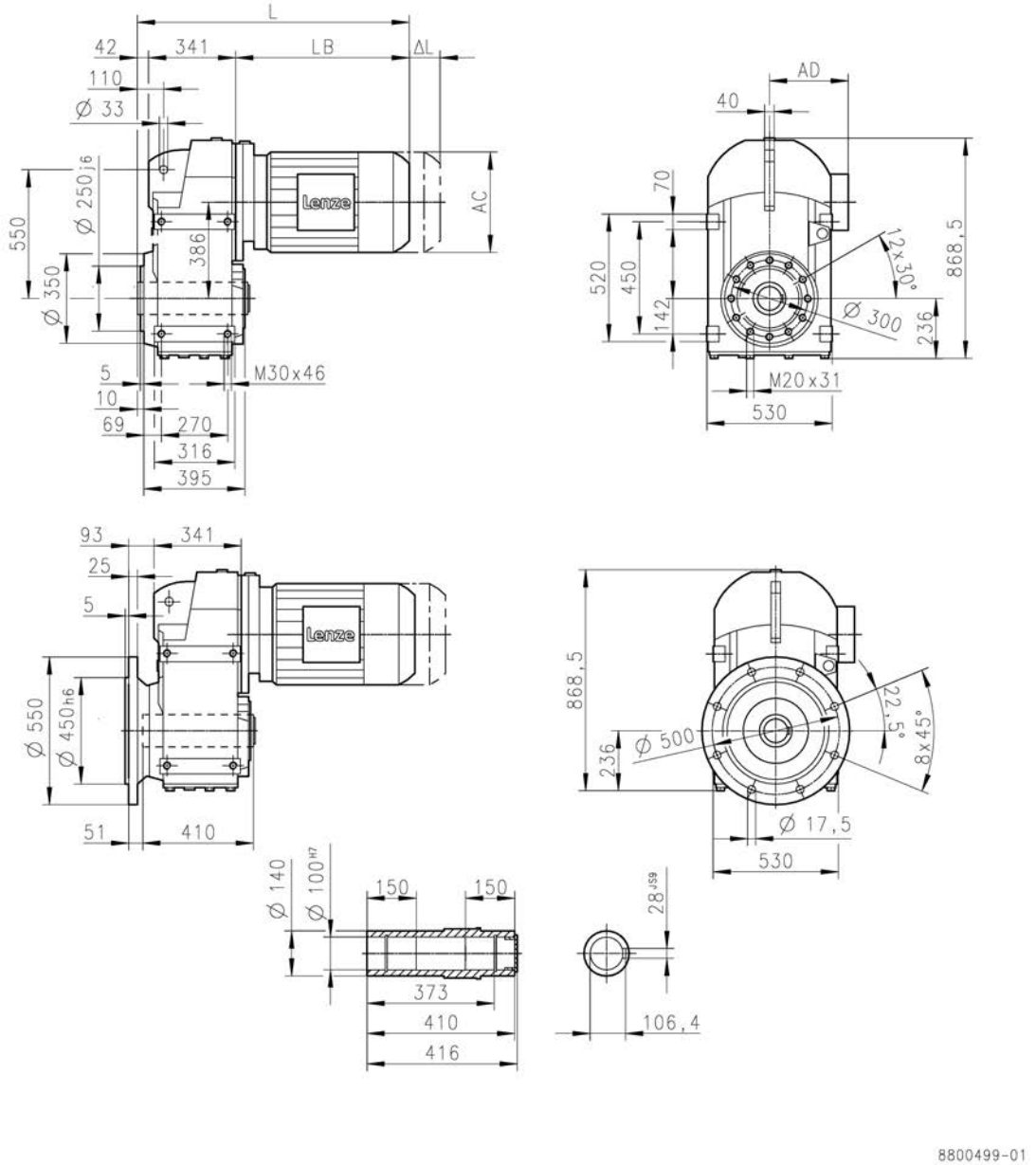

			m540							
			-P112/M4	-P132/M4	-P132/L4	-P160/M4	-P160/L4	-P180/M4	-P180/L4	-P200/M4
Total length	L	[mm]	765	835		867	927	940	970	1033
Motor length	LB	[mm]	379	449		481	541	554	584	647
Length of motor options	Δ L	[mm]	206	259		285		274		293
Motor diameter	AC	[mm]	222	264		318		353		393
Distance motor/connection	AD	[mm]	182	207		241		292		315

L = length of the motor without built-on accessories
ΔL = additional length of the built-on accessories (longest type)

Dimensions, 4-pole motors

g500-S14000

Dimensions with hollow shaft
Gearbox design: HBR, HAR, HAK

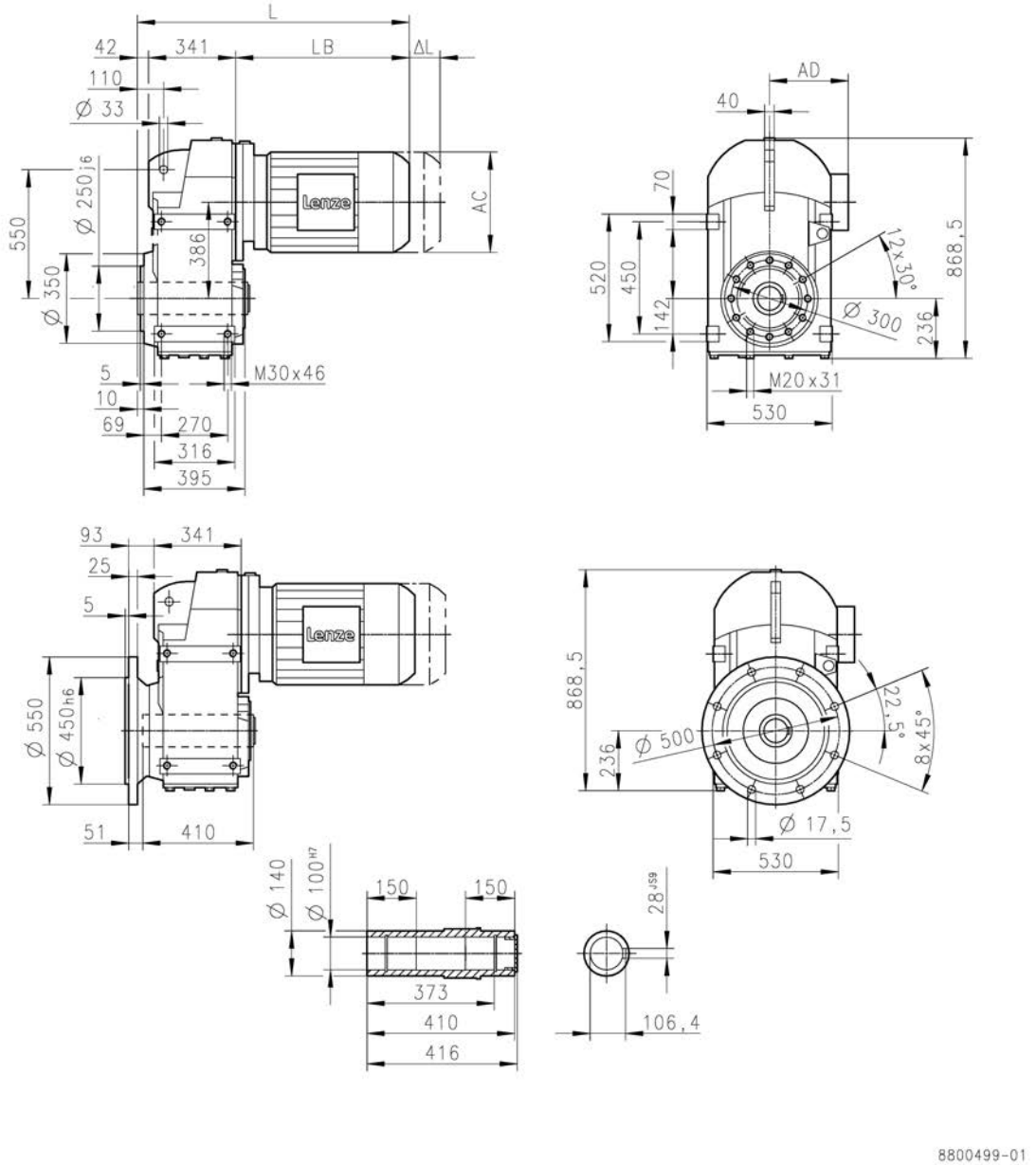

			m540		
			-P225/M4	-P225/L4	-P250/M4
Total length	L	[mm]	1052	1112	1160
Motor length	LB	[mm]	666	726	774
Length of motor options	Δ L	[mm]	787		827
Motor diameter	AC	[mm]	439		487
Distance motor/connection	AD	[mm]	337		408

L = length of the motor without built-on accessories
ΔL = additional length of the built-on accessories (longest type)

Dimensions, 4-pole motors

g500-S14000

Dimensions hollow shaft with shrink disc
Gearbox design: SBR, SAR, SAK

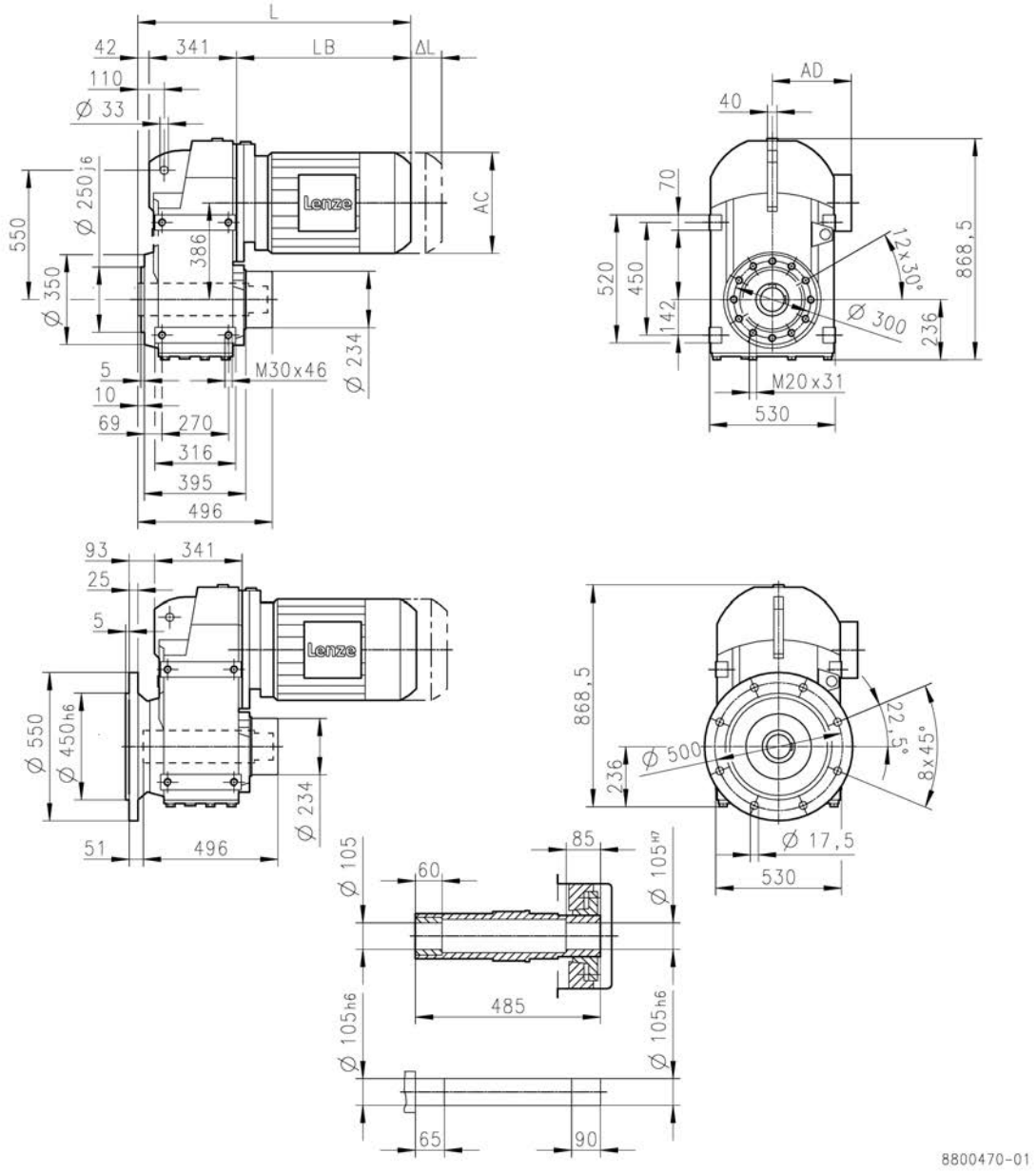

			m540							
			-P112/M4	-P132/M4	-P132/L4	-P160/M4	-P160/L4	-P180/M4	-P180/L4	-P200/M4
Total length	L	[mm]	765	835		867	927	940	970	1033
Motor length	LB	[mm]	379	449		481	541	554	584	647
Length of motor options	Δ L	[mm]	206	259		285		274		293
Motor diameter	AC	[mm]	222	264		318		353		393
Distance motor/connection	AD	[mm]	182	207		241		292		315

L = length of the motor without built-on accessories
ΔL = additional length of the built-on accessories (longest type)

Dimensions, 4-pole motors

g500-S14000

Dimensions hollow shaft with shrink disc
Gearbox design: SBR, SAR, SAK

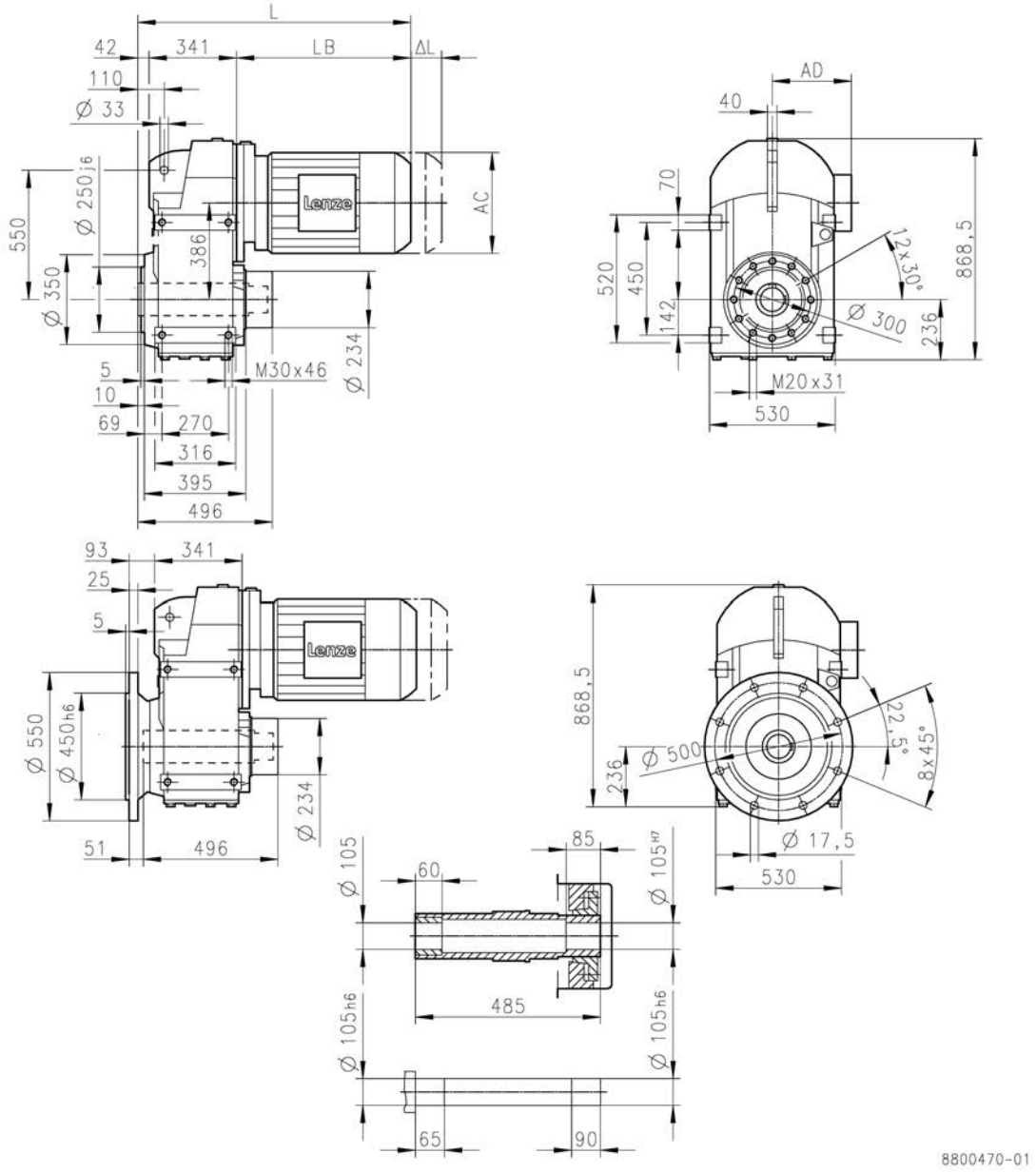

			m540		
			-P225/M4	-P225/L4	-P250/M4
Total length	L	[mm]	1052	1112	1160
Motor length	LB	[mm]	666	726	774
Length of motor options	Δ L	[mm]	787		827
Motor diameter	AC	[mm]	439		487
Distance motor/connection	AD	[mm]	337		408

L = length of the motor without built-on accessories
ΔL = additional length of the built-on accessories (longest type)

Dimensions, 4-pole motors

g500-S14000

Dimensions with solid shaft
Gearbox design: VBR, VAR, VAK

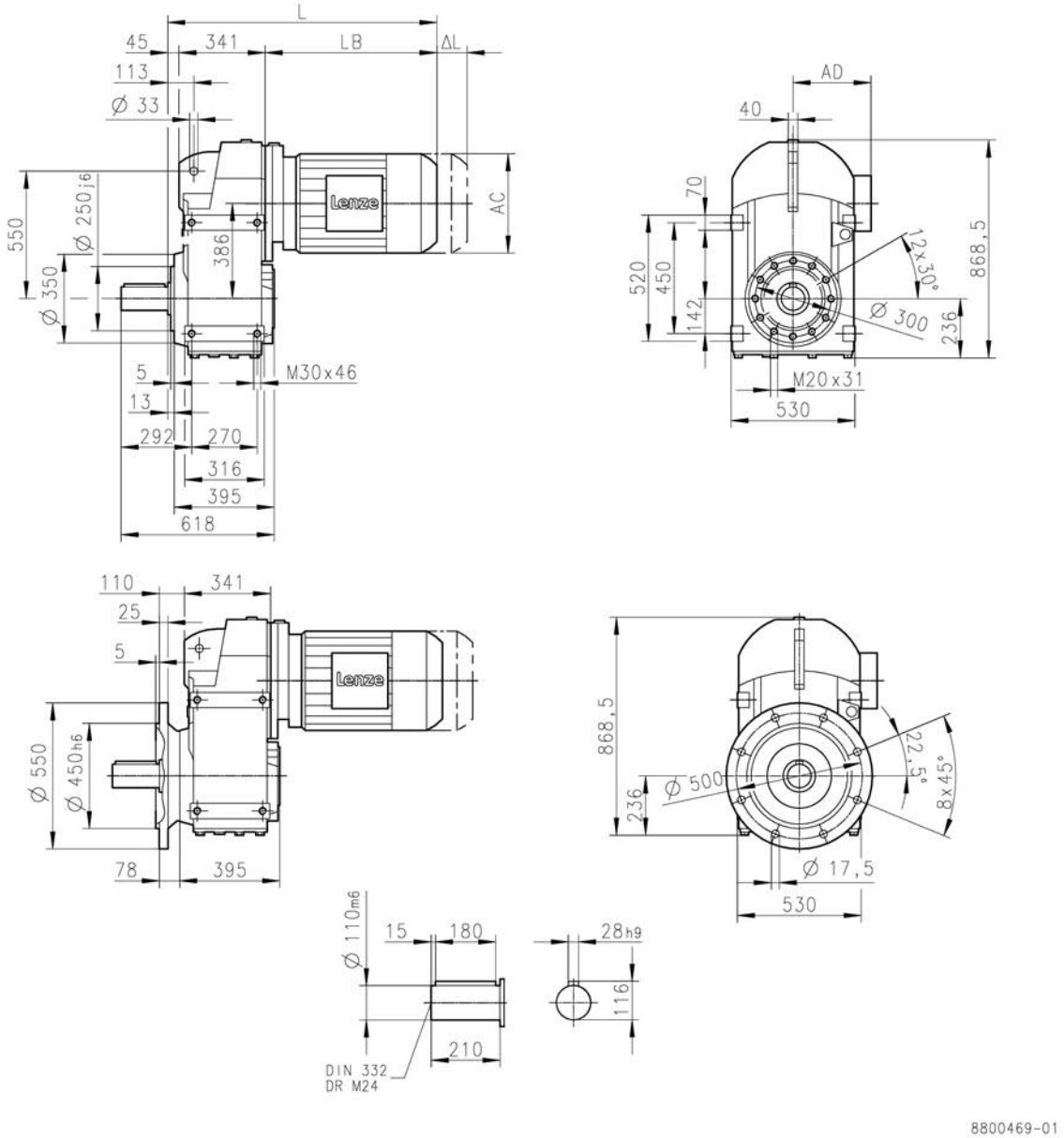

			m540							
			-P112/M4	-P132/M4	-P132/L4	-P160/M4	-P160/L4	-P180/M4	-P180/L4	-P200/M4
Total length	L	[mm]	765	835		867	927	940	970	1033
Motor length	LB	[mm]	379	449		481	541	554	584	647
Length of motor options	Δ L	[mm]	206	259		285		274		293
Motor diameter	AC	[mm]	222	264		318		353		393
Distance motor/connection	AD	[mm]	182	207		241		292		315

L = length of the motor without built-on accessories
ΔL = additional length of the built-on accessories (longest type)

Dimensions, 4-pole motors

g500-S14000

Dimensions with solid shaft
Gearbox design: VBR, VAR, VAK

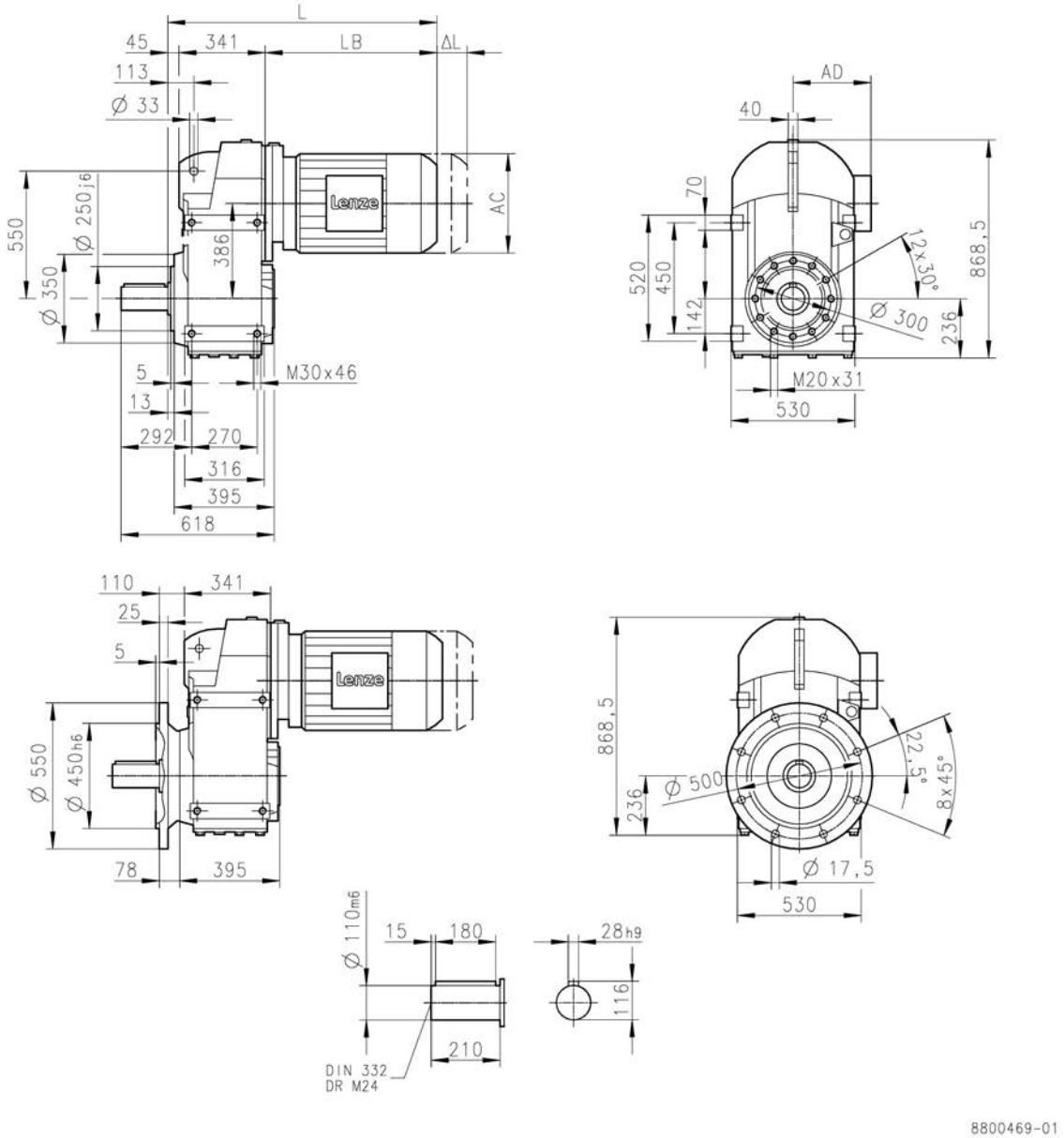

			m540		
			-P225/M4	-P225/L4	-P250/M4
Total length	L	[mm]	1052	1112	1160
Motor length	LB	[mm]	666	726	774
Length of motor options	Δ L	[mm]	787		827
Motor diameter	AC	[mm]	439		487
Distance motor/connection	AD	[mm]	337		408

L = length of the motor without built-on accessories
ΔL = additional length of the built-on accessories (longest type)

Dimensions, 4-pole motors

g500-S19000

Dimensions with hollow shaft
Gearbox design: HBR, HAR, HAK

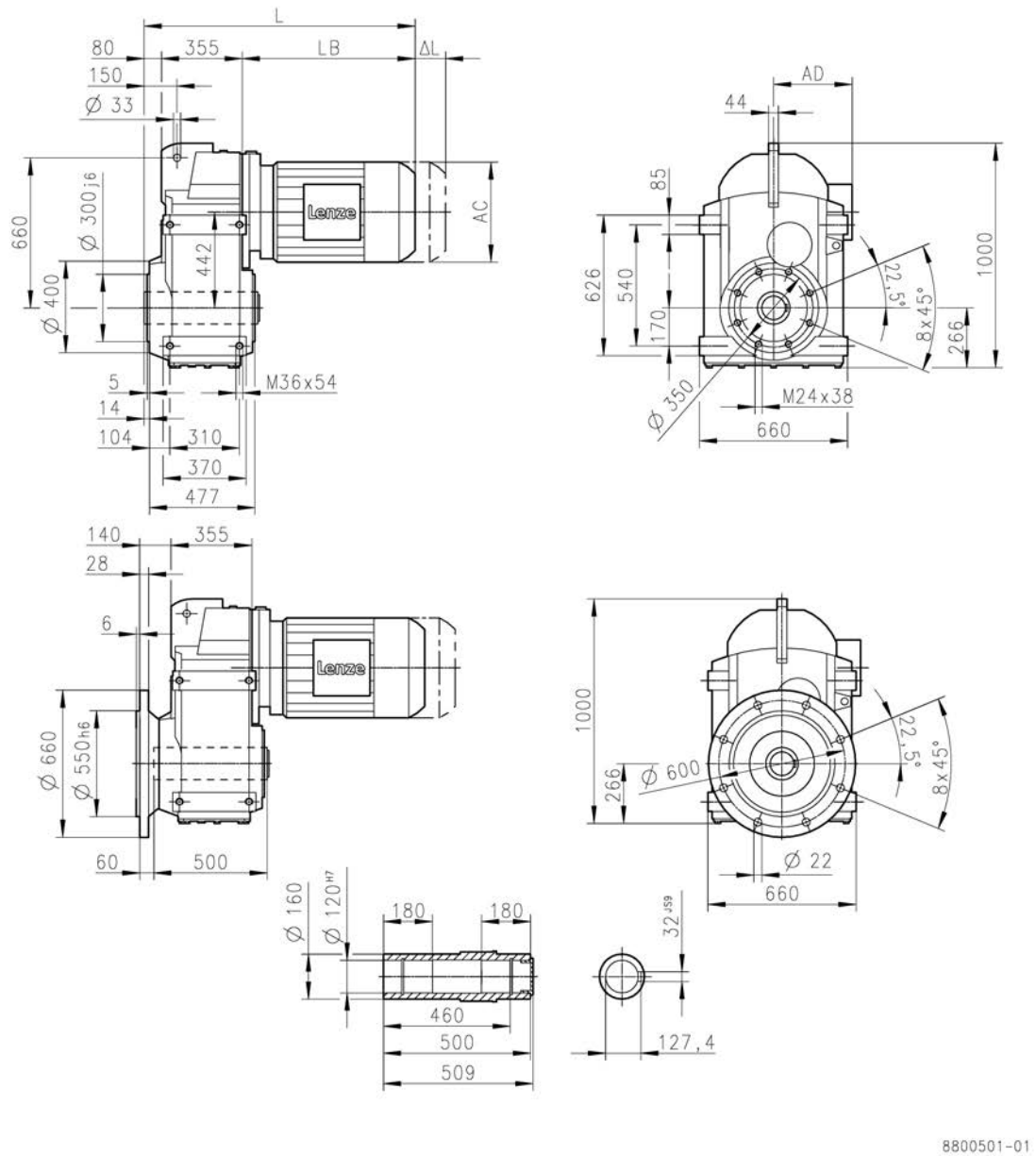

			m540							
			-P112/M4	-P132/M4	-P132/L4	-P160/M4	-P160/L4	-P180/M4	-P180/L4	-P200/M4
Total length	L	[mm]	814	884		916	976	989	1019	1082
Motor length	LB	[mm]	379	449		481	541	554	584	647
Length of motor options	Δ L	[mm]	206	259		285		274		293
Motor diameter	AC	[mm]	222	264		318		353		393
Distance motor/connection	AD	[mm]	182	207		241		292		315

L = length of the motor without built-on accessories
ΔL = additional length of the built-on accessories (longest type)

Dimensions, 4-pole motors

g500-S19000

Dimensions with hollow shaft
Gearbox design: HBR, HAR, HAK

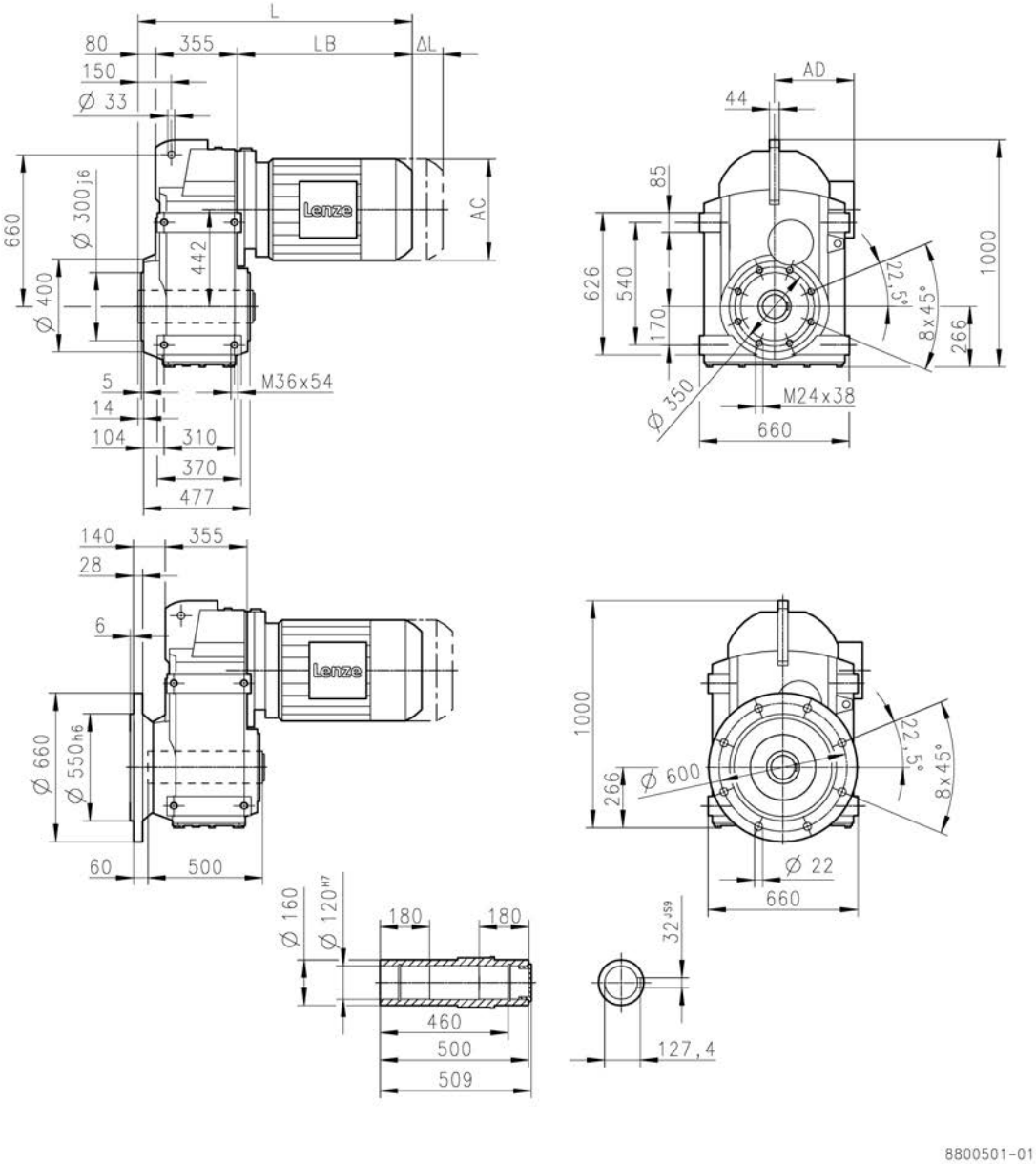

			m540		
			-P225/M4	-P225/L4	-P250/M4
Total length	L	[mm]	1101	1161	1209
Motor length	LB	[mm]	666	726	774
Length of motor options	Δ L	[mm]	787		827
Motor diameter	AC	[mm]	439		487
Distance motor/connection	AD	[mm]	337		408

L = length of the motor without built-on accessories
ΔL = additional length of the built-on accessories (longest type)

Dimensions, 4-pole motors

g500-S19000

Dimensions hollow shaft with shrink disc
Gearbox design: SBR, SAR, SAK

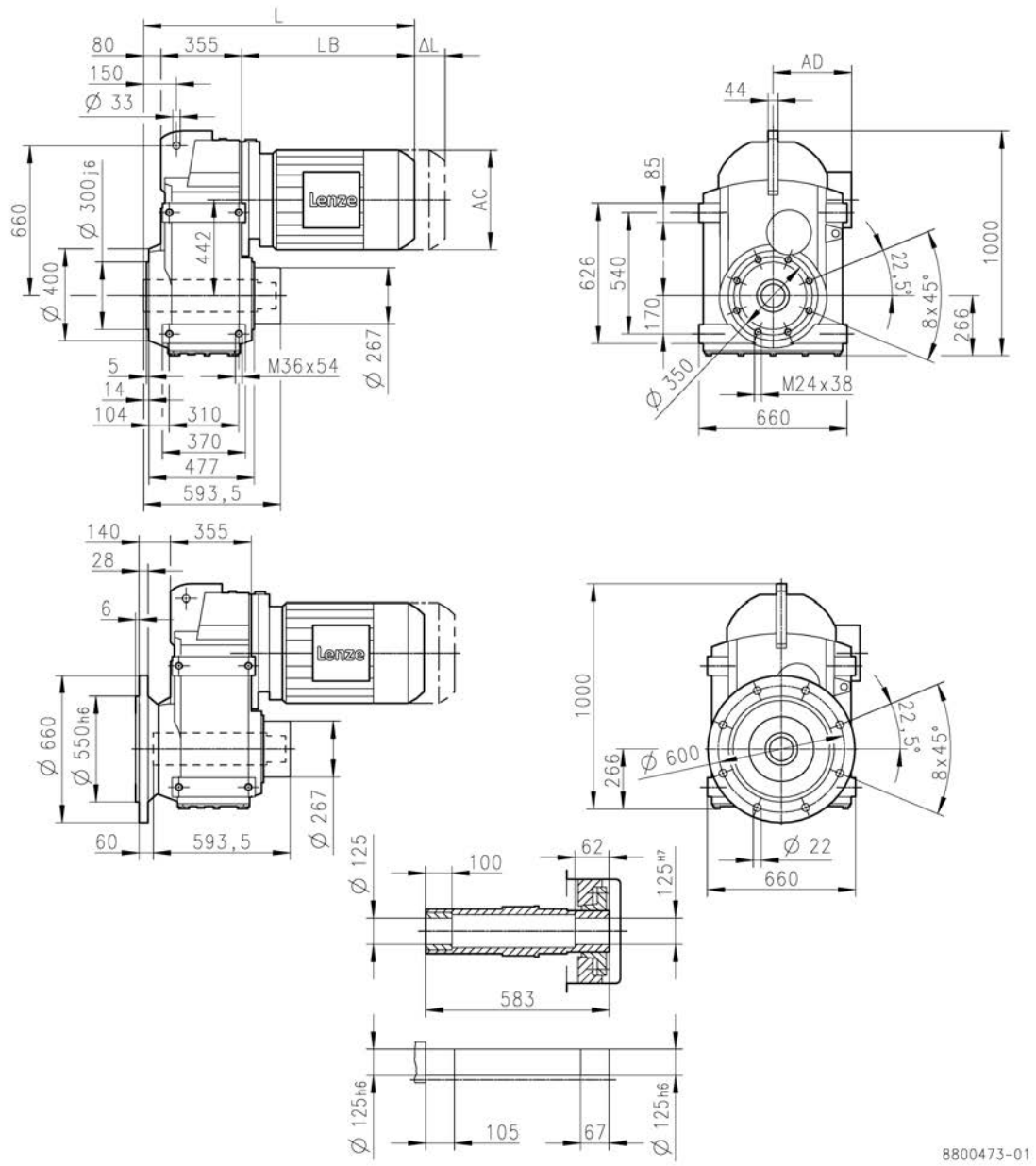

			m540							
			-P112/M4	-P132/M4	-P132/L4	-P160/M4	-P160/L4	-P180/M4	-P180/L4	-P200/M4
Total length	L	[mm]	814	884		916	976	989	1019	1082
Motor length	LB	[mm]	379	449		481	541	554	584	647
Length of motor options	Δ L	[mm]	206	259		285		274		293
Motor diameter	AC	[mm]	222	264		318		353		393
Distance motor/connection	AD	[mm]	182	207		241		292		315

L = length of the motor without built-on accessories
ΔL = additional length of the built-on accessories (longest type)

Dimensions, 4-pole motors

g500-S19000

Dimensions hollow shaft with shrink disc
Gearbox design: SBR, SAR, SAK

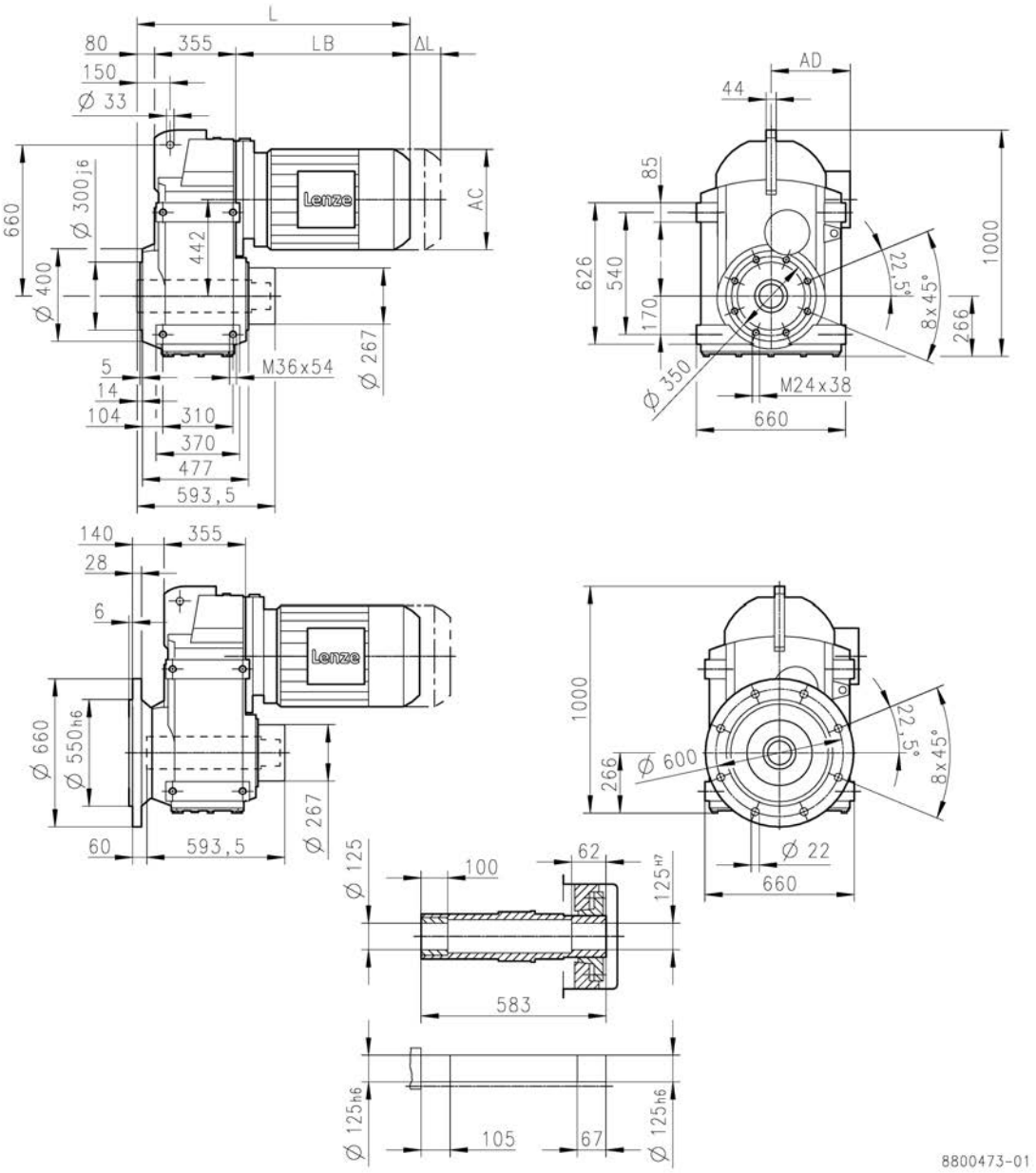

			m540		
			-P225/M4	-P225/L4	-P250/M4
Total length	L	[mm]	1101	1161	1209
Motor length	LB	[mm]	666	726	774
Length of motor options	Δ L	[mm]	787		827
Motor diameter	AC	[mm]	439		487
Distance motor/connection	AD	[mm]	337		408

L = length of the motor without built-on accessories
ΔL = additional length of the built-on accessories (longest type)

Dimensions, 4-pole motors

g500-S19000

Dimensions with solid shaft
Gearbox design: VBR, VAR, VAK

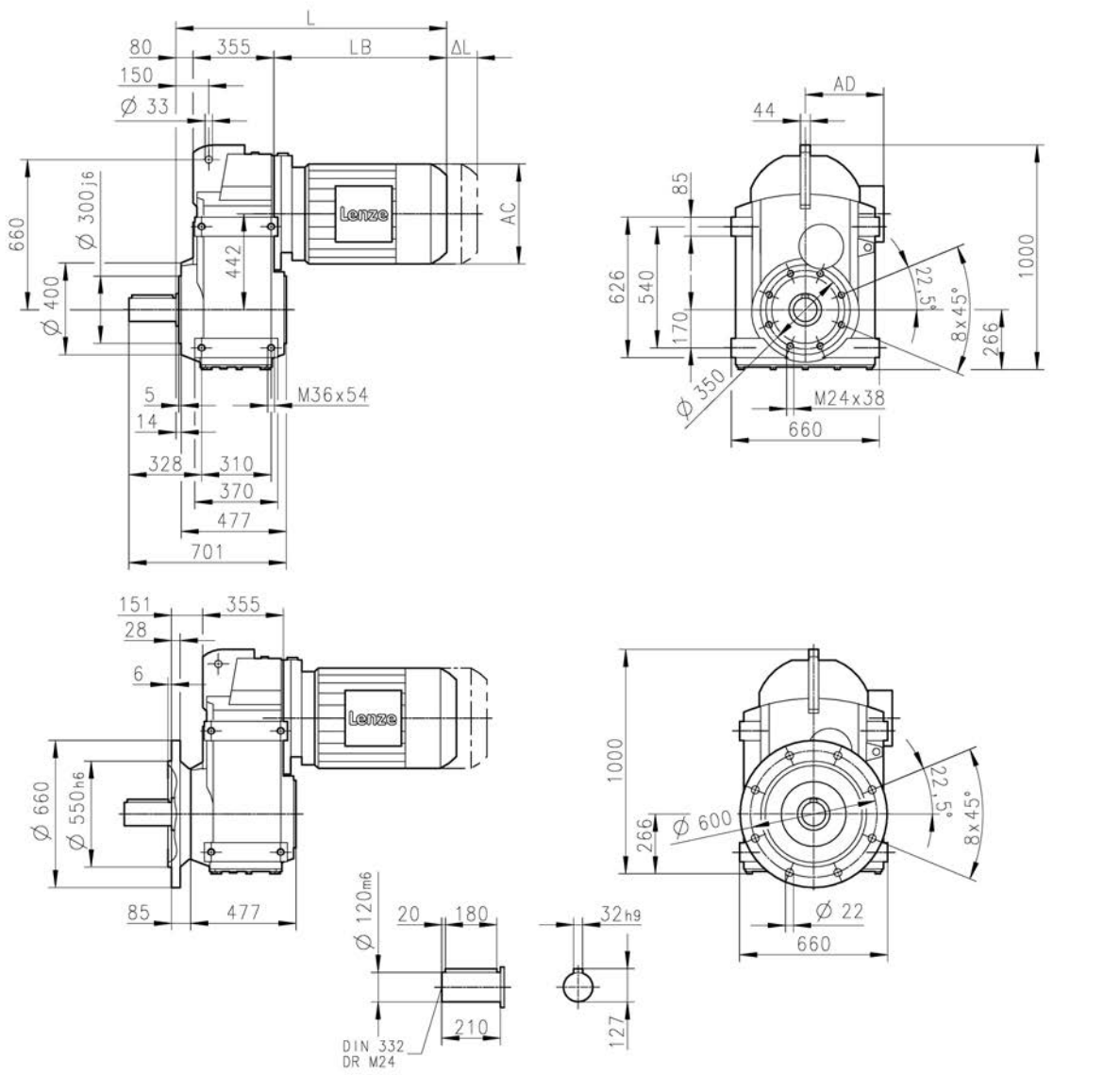

			m540							
			-P112/M4	-P132/M4	-P132/L4	-P160/M4	-P160/L4	-P180/M4	-P180/L4	-P200/M4
Total length	L	[mm]	814	884		916	976	989	1019	1082
Motor length	LB	[mm]	379	449		481	541	554	584	647
Length of motor options	Δ L	[mm]	206	259		285		274		293
Motor diameter	AC	[mm]	222	264		318		353		393
Distance motor/connection	AD	[mm]	182	207		241		292		315

L = length of the motor without built-on accessories
ΔL = additional length of the built-on accessories (longest type)

Dimensions, 4-pole motors

g500-S19000

Dimensions with solid shaft
Gearbox design: VBR, VAR, VAK

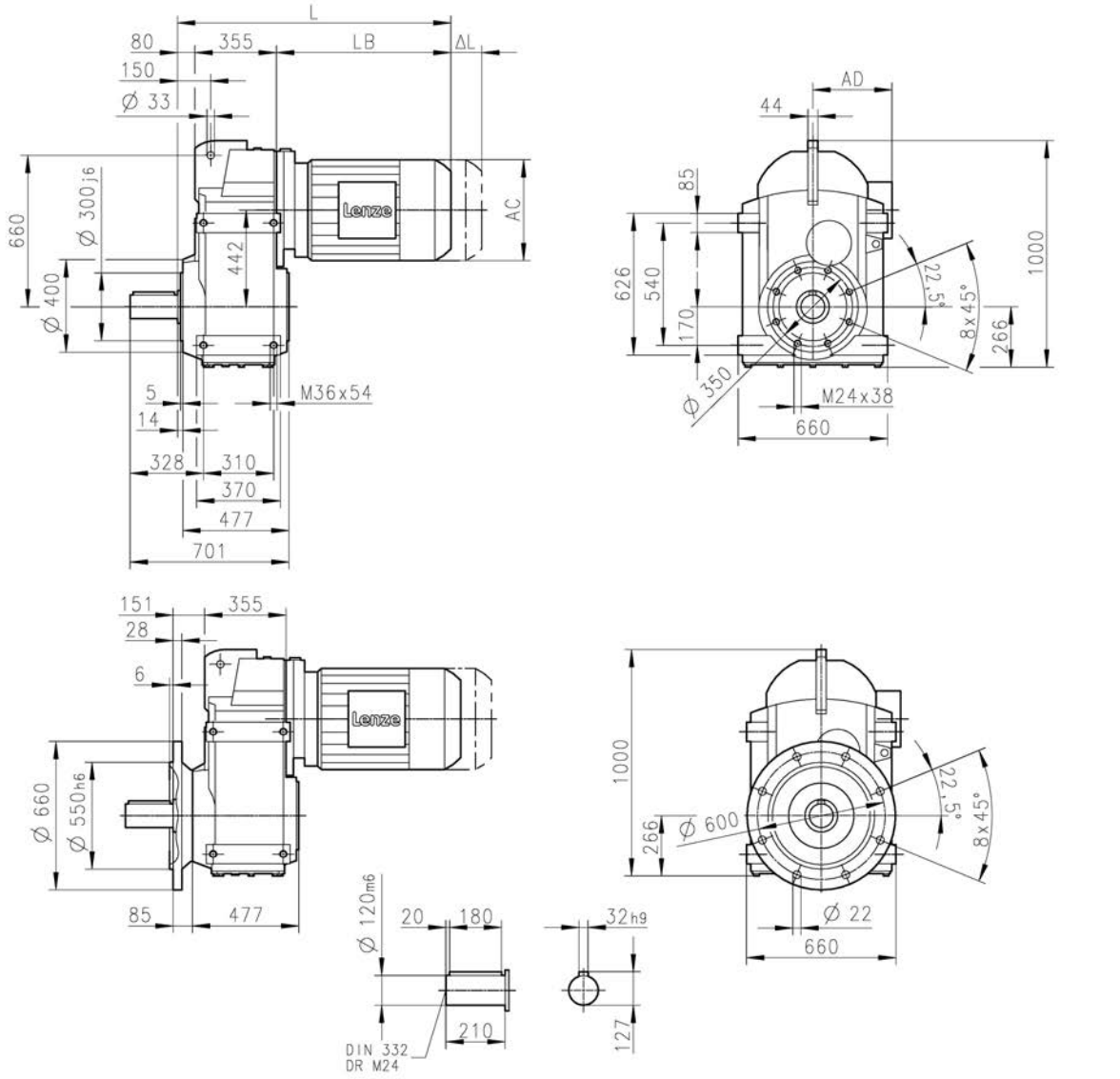

			m540		
			-P225/M4	-P225/L4	-P250/M4
Total length	L	[mm]	1101	1161	1209
Motor length	LB	[mm]	666	726	774
Length of motor options	Δ L	[mm]	787		827
Motor diameter	AC	[mm]	439		487
Distance motor/connection	AD	[mm]	337		408

L = length of the motor without built-on accessories
ΔL = additional length of the built-on accessories (longest type)

Shrink disc dimensions

Shrink disc in position 1

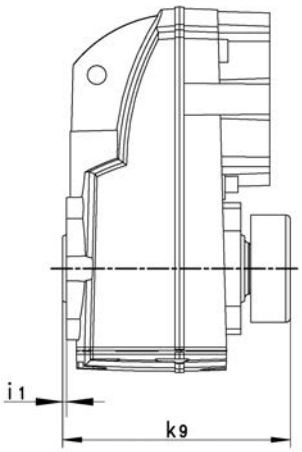

Shrink disc in position 6

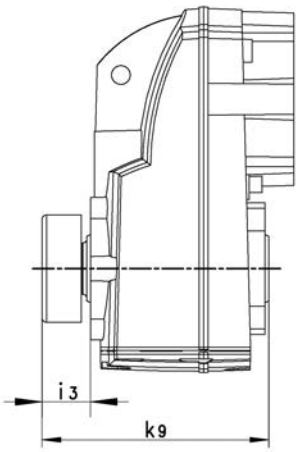

Product	Dimensions		
	i_1	i_3	k_9
	[mm]	[mm]	[mm]
g500-S130	2.50	28.0	130
g500-S220	2.50	32.0	150
g500-S400	4.00	33.0	179
g500-S660	5.00	33.0	198
g500-S950	5.00	41.5	217
g500-S2100	5.00	44.0	249
g500-S3100	5.00	48.0	286
g500-S4500	6.00	57.5	354
g500-S8000 [1)]	11.0		409
g500-S14000 [1)]	10.0		496
g500-S19000 [1)]	14.0		594

[1)] Only available in position 1.

Additional length of the built-on accessories

Dimensions, self-ventilated (4-pole)

Product			MD□MA□□		
			063-02 063-22	063-12 063-32 063-42	071-32 071-42
Brake					
	Δ L	[mm]	71.0	40.0	52.0
Feedback					
	Δ L	[mm]	71.0	56.0	52.0
Brake + Feedback					
	Δ L	[mm]	135	103	96.0

Product			m550						
			-P80/M4	-P90/M4 -P90/L4	-P100/M4 -P100/L4	-P112/M4	-P132/M4 -P132/L4	-P160/M4 -P160/L4	-P180/M4 -P180/L4 -P180/V4
Brake									
	Δ L	[mm]	73.0	62.0	76.0	90.0	79.0	105	103
Feedback									
	Δ L	[mm]	97.0	82.0	81.0	80.0	102	105	79.0
Brake + Feedback									
	Δ L	[mm]	110	99.0	101	120	124	191	182

Product			m540					
			-P90/L4	-P100/M4 -P100/L4	-P112/M4	-P132/M4 -P132/L4	-P160/M4 -P160/L4	-P180/M4 -P180/L4
Brake								
	Δ L	[mm]	70.0	78.5	73.0	105	116	129
Feedback								
	Δ L	[mm]	92.5	93.5	95.0			
Brake + Feedback								
	Δ L	[mm]	163	172	168	200	211	224

Product			m540		
			-P200/M4	-P225/M4 -P225/L4	-P250/M4
Brake					
	Δ L	[mm]	147	239	225
Feedback					
	Δ L	[mm]	95.0	125	
Brake + Feedback					
	Δ L	[mm]	242	364	

Additional length of the built-on accessories

Dimensions, forced ventilated (4-pole)

Product			MD□MA□□	
			063-12 063-32 063-42	071-32 071-42
Brake				
	Δ L	[mm]	128	
Feedback				
	Δ L	[mm]	170	165
Brake + Feedback				
	Δ L	[mm]	128	

Product			m550						
			-P80/M4	-P90/M4 -P90/L4	-P100/M4 -P100/L4	-P112/M4	-P132/M4 -P132/L4	-P160/M4 -P160/L4	-P180/M4 -P180/L4 -P180/V4
Brake									
	Δ L	[mm]	183	175	170	183	201	179	207
Feedback									
	Δ L	[mm]	127	122	109	183	201	237	207
Brake + Feedback									
	Δ L	[mm]	183	175	170	183	201	237	267

Product			m540					
			-P90/L4	-P100/M4 -P100/L4	-P112/M4	-P132/M4 -P132/L4	-P160/M4 -P160/L4	-P180/M4 -P180/L4
Brake								
	Δ L	[mm]	120	122	113	165	191	199
Feedback								
	Δ L	[mm]	213	219	206	259	285	274
Brake + Feedback								
	Δ L	[mm]	213	219	206	259	285	274

Product			m540		
			-P200/M4	-P225/M4 -P225/L4	-P250/M4
Brake					
	Δ L	[mm]	233		
Feedback					
	Δ L	[mm]	293	787	827
Brake + Feedback					
	Δ L	[mm]	293		

Weights, 4-pole motors

► Weights with oil capacity for mounting position A, all given as approximate values.
The weights refer to the basic version, observe additional weights!

2-stage gearboxes

Product		Mass
		m
		[kg]
g500-S130	MD□MA□□063-12	9.70
	MD□MA□□063-32	
	MD□MA□□063-42	10.0
	MD□MA□□071-32	11.4
	MD□MA□□071-42	12.0
	m550-P80/M4	20.5
	m550-P90/M4	25.5
	m550-P90/L4	26.5
g500-S220	MD□MA□□063-12	11.5
	MD□MA□□063-32	
	MD□MA□□063-42	11.8
	MD□MA□□071-32	13.2
	MD□MA□□071-42	13.8
	m550-P80/M4	22.3
	m550-P90/M4	27.3
	m550-P90/L4	28.3
	m550-P100/M4	38.3
	m550-P100/L4	40.3
g500-S400	MD□MA□□063-12	15.0
	MD□MA□□063-32	
	MD□MA□□063-42	15.3
	MD□MA□□071-32	16.7
	MD□MA□□071-42	17.3
	m550-P80/M4	25.8
	m550-P90/M4	30.8
	m550-P90/L4	31.8
	m550-P100/M4	41.8
	m550-P100/L4	43.8
	m550-P112/M4	46.8
g500-S660	MD□MA□□063-42	20.5
	MD□MA□□071-32	21.9
	MD□MA□□071-42	22.5
	m550-P80/M4	31.0
	m550-P90/M4	36.0
	m550-P90/L4	37.0
	m550-P100/M4	47.0
	m550-P100/L4	49.0
	m550-P112/M4	52.0
	m550-P132/M4	73.0
	m550-P132/L4	85.0

Product		Mass
		m
		[kg]
g500-S950	MD□MA□□071-42	42.1
	m550-P80/M4	50.6
	m550-P90/M4	55.6
	m550-P90/L4	56.6
	m550-P100/M4	66.6
	m550-P100/L4	68.6
	m550-P112/M4	71.6
	m550-P132/M4	92.6
	m550-P132/L4	105
g500-S2100	m550-P90/M4	87.9
	m550-P90/L4	88.9
	m550-P100/M4	98.9
	m550-P100/L4	101
	m550-P112/M4	104
	m550-P132/M4	125
	m550-P132/L4	137
	m550-P160/M4	176
	m550-P160/L4	187
	m550-P180/M4	225
	m550-P180/L4	
	m550-P180/V4	253
g500-S3100	m550-P90/M4	127
	m550-P90/L4	128
	m550-P100/M4	138
	m550-P100/L4	140
	m550-P112/M4	143
	m550-P132/M4	164
	m550-P132/L4	176
	m550-P160/M4	215
	m550-P160/L4	226
	m550-P180/M4	264
	m550-P180/L4	
	m550-P180/V4	292
g500-S4500	m550-P100/M4	211
	m550-P100/L4	213
	m550-P112/M4	216
	m550-P132/M4	237
	m550-P132/L4	249
	m550-P160/M4	288
	m550-P160/L4	299

Weights, 4-pole motors

► Weights with oil capacity for mounting position A, all given as approximate values.
The weights refer to the basic version, observe additional weights!

2-stage gearboxes

Product		Mass
		m
		[kg]
g500-S4500	m550-P180/M4	337
	m550-P180/L4	
	m550-P180/V4	365
g500-S8000	m540-P132/M4	329
	m540-P132/L4	
	m540-P160/M4	345
	m540-P160/L4	362
	m540-P180/M4	437
	m540-P180/L4	442
	m540-P200/M4	512
	m540-P225/M4	557
	m540-P225/L4	592
g500-S14000	m540-P132/L4	494
	m540-P160/M4	510
	m540-P160/L4	527
	m540-P180/M4	602
	m540-P180/L4	607
	m540-P200/M4	677
	m540-P225/M4	722
	m540-P225/L4	757
g500-S19000	m540-P160/L4	761
	m540-P180/M4	836
	m540-P180/L4	841
	m540-P200/M4	911
	m540-P225/M4	956

Weights, 4-pole motors

► Weights with oil capacity for mounting position A, all given as approximate values.
The weights refer to the basic version, observe additional weights!

3-stage gearboxes

Product		Mass
		m
		[kg]
g500-S220	MD□MA□□063-12	11.7
	MD□MA□□063-32	
	MD□MA□□063-42	12.0
	MD□MA□□071-32	13.4
	MD□MA□□071-42	14.0
	m550-P80/M4	22.5
g500-S400	MD□MA□□063-12	15.2
	MD□MA□□063-32	
	MD□MA□□063-42	15.5
	MD□MA□□071-32	16.9
	MD□MA□□071-42	17.5
	m550-P80/M4	26.0
g500-S660	MD□MA□□063-12	20.6
	MD□MA□□063-32	
	MD□MA□□063-42	20.9
	MD□MA□□071-32	22.3
	MD□MA□□071-42	22.9
	m550-P80/M4	31.4
	m550-P90/M4	36.4
	m550-P90/L4	37.4
g500-S950	MD□MA□□063-12	40.4
	MD□MA□□063-32	
	MD□MA□□063-42	40.7
	MD□MA□□071-32	42.1
	MD□MA□□071-42	42.7
	m550-P80/M4	51.2
	m550-P90/M4	56.2
	m550-P90/L4	57.2
	m550-P100/M4	67.2
	m550-P100/L4	69.2
g500-S2100	MD□MA□□063-42	72.9
	MD□MA□□071-32	74.3
	MD□MA□□071-42	74.9
	m550-P80/M4	83.4
	m550-P90/M4	88.4
	m550-P90/L4	89.4
	m550-P100/M4	99.4
	m550-P100/L4	101
	m550-P112/M4	104
	m550-P132/M4	125
	m550-P132/L4	137

Product		Mass
		m
		[kg]
g500-S3100	MD□MA□□063-42	112
	MD□MA□□071-32	114
	MD□MA□□071-42	
	m550-P80/M4	123
	m550-P90/M4	128
	m550-P90/L4	129
	m550-P100/M4	139
	m550-P100/L4	141
	m550-P112/M4	144
	m550-P132/M4	165
	m550-P132/L4	177
g500-S4500	MD□MA□□071-42	190
	m550-P80/M4	198
	m550-P90/M4	203
	m550-P90/L4	204
	m550-P100/M4	214
	m550-P100/L4	216
	m550-P112/M4	219
	m550-P132/M4	240
	m550-P132/L4	252
	m550-P160/M4	291
	m550-P160/L4	302
	m550-P180/M4	340
g500-S8000	m540-P100/M4	310
	m540-P100/L4	
	m540-P112/M4	
	m540-P132/M4	338
	m540-P132/L4	
	m540-P160/M4	354
	m540-P160/L4	371
	m540-P180/M4	446
	m540-P180/L4	451
	m540-P200/M4	521
	m540-P225/M4	566
	m540-P225/L4	601
g500-S14000	m540-P112/M4	481
	m540-P132/M4	509
	m540-P132/L4	
	m540-P160/M4	525
	m540-P160/L4	542
	m540-P180/M4	617

Weights, 4-pole motors

► Weights with oil capacity for mounting position A, all given as approximate values.
The weights refer to the basic version, observe additional weights!

3-stage gearboxes

Product		Mass
		m
		[kg]
g500-S14000	m540-P180/L4	622
	m540-P200/M4	692
	m540-P225/M4	737
	m540-P225/L4	772
	m540-P250/M4	872
g500-S19000	m540-P112/M4	729
	m540-P132/M4	757
	m540-P132/L4	
	m540-P160/M4	773
	m540-P160/L4	790
	m540-P180/M4	865
	m540-P180/L4	870
	m540-P200/M4	940
	m540-P225/M4	985
	m540-P225/L4	1020
	m540-P250/M4	1120

Additional weights for gearboxes

Product								
			g500-S130	g500-S220	g500-S400	g500-S660	g500-S950	g500-S2100
Mass								
Solid shaft	m	[kg]	0.5	0.5	1.7	2.5	3.0	5.5
Shrink disc	m	[kg]	0.2	0.4	0.6	0.6	1.2	1.7
Foot	m	[kg]	1.7	1.8	3.3	4.3		
Flange	m	[kg]	0.4	0.4	0.9	1.7	6.0	11.5

Product							
			g500-S3100	g500-S4500	g500-S8000	g500-S14000	g500-S19000
Mass							
Solid shaft	m	[kg]	8.4	19.0	22.0	43.0	55.0
Shrink disc	m	[kg]	2.3	4.3	6.0	18.0	15.0
Foot	m	[kg]					
Flange	m	[kg]	15.0	29.0	42.0	129.0	169.0

Additional weights for motors

4-pole motors

Product					
			MD□MA□□		
			063-02 063-22	063-12 063-32 063-42	071-32 071-42
Brake			06		06 08
	m	[kg]	0.9		0.9 1.5
Blower					
	m	[kg]		2.0	2.1

Product								
			m550					
			-P80/M4	-P90/M4 -P90/L4	-P100/M4 -P100/L4	-P112/M4	-P132/M4 -P132/L4	-P160/M4 -P160/L4	-P180/M4 -P180/L4 -P180/V4
Brake			08 10		10 12	12 14	14 16	16 18	18 20
	m	[kg]	1.5 2.6		2.6 4.2	4.2 5.8	5.8 8.7	8.7 12.6	12.6 19.5
Blower									
	m	[kg]	2.3	2.7	3.0	3.1	5.0	7.3	10.3

Additional weights for motors

4-pole motors

Product			m540				
			-P90/L4	-P100/M4 -P100/L4	-P112/M4	-P132/M4 -P132/L4	-P160/M4 -P160/L4
Brake			08E 10E 12E	10E 12E 14E	12E 14E	16E 18E	20E 18E
	m	[kg]	1.5 2.6 4.2	2.6 4.2 5.8	4.2 5.8	8.7 12.6	12.6 12.6
Blower							
	m	[kg]	1.9	2.1	2.2	3.0	4.2

Product			m540			
			-P180/M4 -P180/L4	-P200/M4	-P225/M4 -P225/L4	-P250/M4
Brake			20E	20E 25E	25E 30E	30E 40E
	m	[kg]	12.6	12.6 31.0	31.0 45.0	45.0 80.0
Blower						
	m	[kg]	8.2	9.8	22.0	

Overview

Torque plate

The torque is usually supported via the foot or the flange.
Another simple option is the integrated torque plate at the housing. Here, the torque is supported only via one point and is, among other things, suitable for shaft-mounted gearboxes. Moreover, the suitable rubber buffers provide for a low-tension installation and absorb slight shocks.

The rubber buffers can be ordered optionally.

Rubber buffer for torque plate

Shaft cover

The optional shrink disc cover is provided for the shrink disc to be protected from contact.

Shrink disc cover
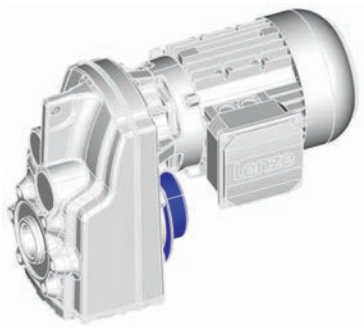

Torque plate

Rubber buffer for torque plate

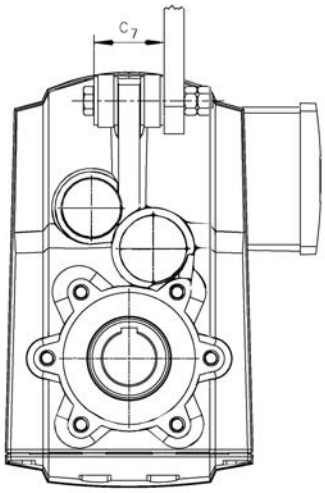

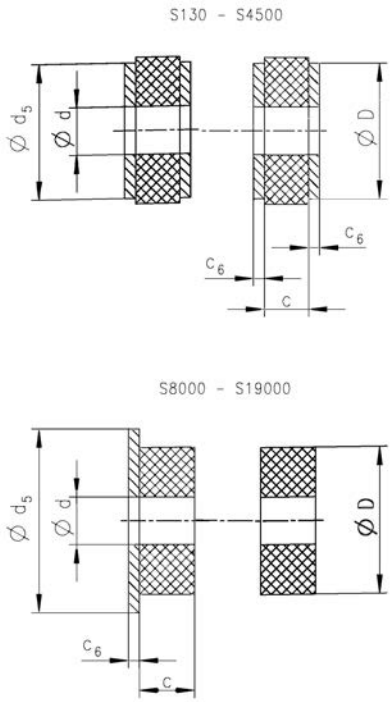

Product	Dimensions						Mass
	d	D	d_5	c	c_6	c_7	m
	[mm]	[mm]	[mm]	[mm]	[mm]	[mm]	[kg]
g500-S130	11.0	30.0	30	12.0	2.50	45.0	0.1
g500-S220	11.0	30.0	30	12.0	2.50	45.0	0.1
g500-S400	13.0	40.0	37	12.0	3.00	49.0	0.1
g500-S660	13.0	40.0	37	12.0	3.00	52.0	0.1
g500-S950	13.0	40.0	37	12.0	3.00	56.0	0.1
g500-S2100	17.0	50.0	50	24.0	3.00	85.0	0.5
g500-S3100	21.0	60.0	60	24.0	4.00	94.0	0.5
g500-S4500	26.0	72.0	72	24.0	5.00	98.0	0.5
g500-S8000	25.0	80.0	100	40.0	10.0	128	1.0
g500-S14000	31.0	120	140	50.0	12.0	152	1.0
g500-S19000	31.0	120	140	50.0	12.0	156	1.0

Shaft cover

Shrink disc cover

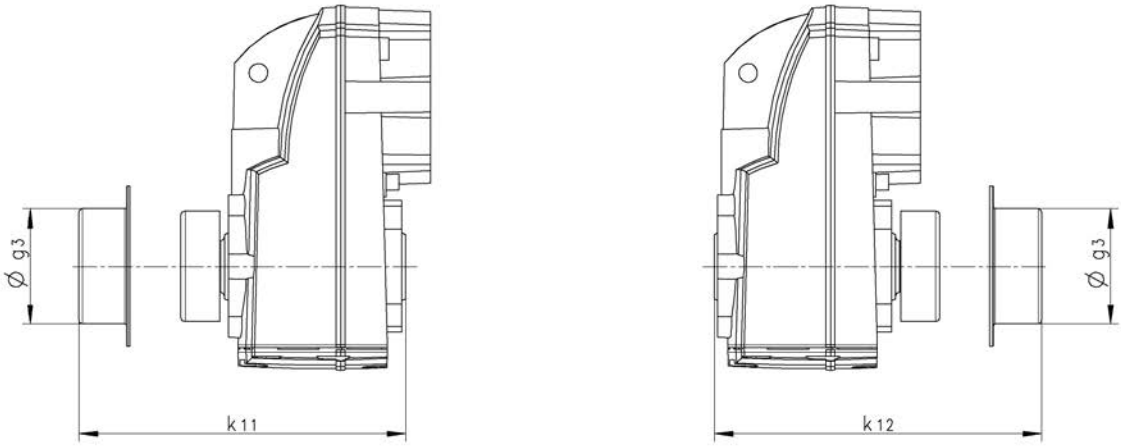

Product	Dimensions			Mass
	g_3	k_{11}	k_{12}	m
	[mm]	[mm]	[mm]	[kg]
g500-S130	63.0	132	132	0.1
g500-S220	76.0	152	152	0.1
g500-S400	90.0	182	182	0.1
g500-S660	90.0	200	202	0.1
g500-S950	110	219	219	0.1
g500-S2100	127	252	252	0.2
g500-S3100	155	290	290	0.3
g500-S4500	188	355	357	0.4
g500-S8000 [1)]	218		425	0.5
g500-S14000 [1)]	258		520	0.6
g500-S19000 [1)]	310		622	0.9

[1)] Shrink disc only available in position 1 (on the motor end).

Gearbox code

Example		G	50	B	S	113	M	H	D	R	2	C	1B
Meaning	**Variant**												
Product family		G	50										
Generation				B									
Gearbox type	Shaft-mounted helical gearbox				S								
Output torque	130 Nm					113							
	220 Nm					122							
	400 Nm					140							
	660 Nm					166							
	950 Nm					195							
	2100 Nm					221							
	3100 Nm					231							
	4500 Nm					245							
	8000 Nm					280							
	14000 Nm					314							
	19000 Nm					319							
Type of construction	Geared motor						M						
	Gearboxes						N						
Shaft type	Solid shaft with feather key							V					
	Hollow shaft with keyway							H					
	Hollow shaft with shrink disc							S					
Housing type	Foot mounting + centering								A				
	Foot mounting								B				
	Centering								C				
	Threaded pitch circle								D				
Flange mounting	Without flange									R			
	Flange with through holes									k			
Number of stages	2-stage										2		
	3-stage										3		
Motor mounting	Integrated											C	
	IEC motor											N	
	NEMA motor											A	
	Servo motor											S	
Drive size													1A ... □H

Motor code

Example	M	D	E	MA	XX	063	-	4	2	C1	C

Meaning	Variant	Motor code										
Product family		M										
Efficiency class	IE1		D									
Cooling	Natural ventilation			S								
	Integral fan			E								
	Blower			F								
Internal key					MA							
Built-on accessories	Without built-on accessories					XX						
	Brake					BR						
	Brake + resolver					BS						
	Brake + incremental encoder					BI						
	Brake + SinCos absolute value encoder					BA						
	Resolver					RS						
	Incremental encoder					IG						
	SinCos absolute value encoder					AG						
Size							063					
							071					
Overall length								-	0			
									1			
									2			
									3			
									4			
Number of pole pairs	4-pole motors									2		
	2-pole motors									1		
Internal key											C1	
Approval	CE											C
	cURus											U
	CCC											3

Motor code

Example	M	55	A	P	080	M	04	5	E	0	0	W	T

Meaning	Variant	Motor code												
Product family		M	54											
			55											
Generation				A										
Efficiency class	Premium - IE3				P									
Size						080								
						090								
						100								
						112								
						132								
						160								
						180								
						200								
						225								
						250								
Overall length	Medium						M							
	Long						L							
	Very long						V							
Number of poles	4-pole							04						
Degree of protection	IP5□								5					
	IP6□								6					
Cooling	Integral fan									E				
	Blower									F				
Brake attachment	Without brake										0			
	Spring-applied brake										F			
Actual value encoder	Without encoder											0		
	Resolver											R		
	Absolute value encoder											A		
	Incremental encoder											E		
Approval	CE												C	
	CE, CCC												3	
	CE, cURus												U	
	CE, cURus, CCC												W	
Design type	Internal key													M
														T

g500-B bevel geared motors

Inverter operation
0.06 ... 0.55 kW (efficiency class IE1)
0.75 ... 55 kW (efficiency class IE3)

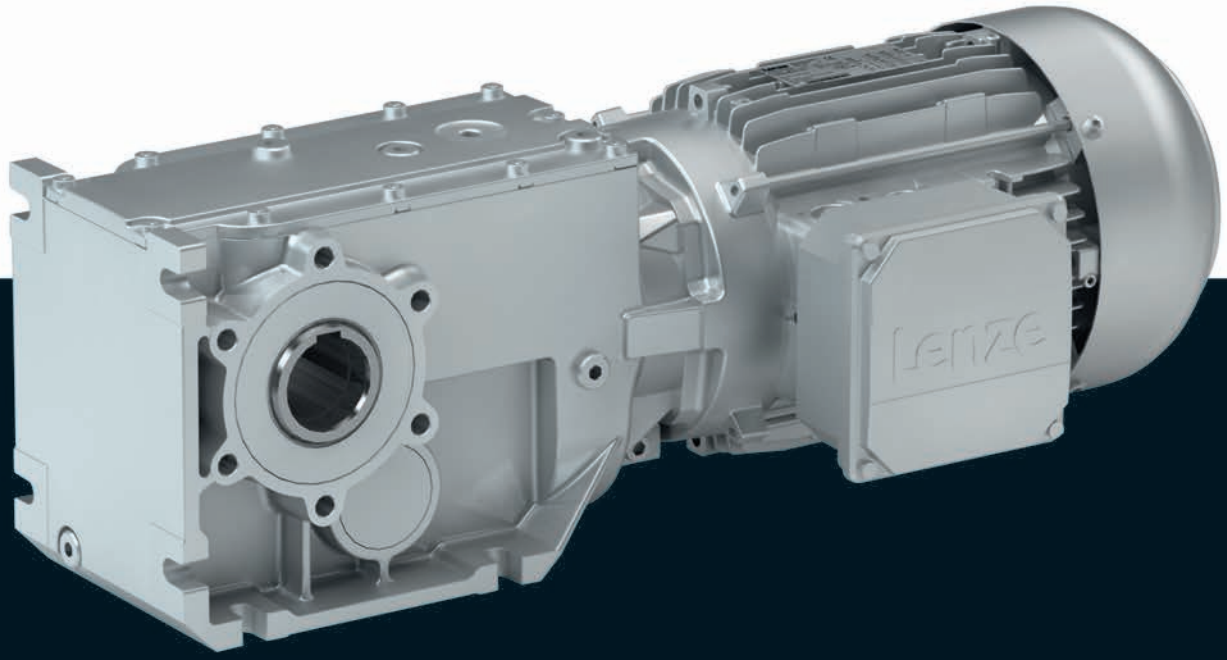

g500-B bevel geared motors

Contents

General information	List of abbreviations	6.5 - 4
	Product information	6.5 - 6
	Equipment	6.5 - 7
	The geared motor kit	6.5 - 10
Project planning	General information about the data provided in this catalogue	6.5 - 21
	Procedure of a configuration process	6.5 - 22
	Standards	6.5 - 30
	Thermal power limit	6.5 - 33
	Load capacity and application factor	6.5 - 34
	Operational performance of three-phase AC geared motors	6.5 - 35
	Technical data at a glance	6.5 - 38
	Gearbox with mounting flange	6.5 - 51
	Surface and corrosion protection	6.5 - 56
	Lubricants	6.5 - 58
	Ventilation	6.5 - 59
Technical data	Standards and operating conditions	6.5 - 69
	Permissible radial and axial forces at output	6.5 - 70
	Selection tables, notes	6.5 - 73
	Selection tables, 4-pole motors	6.5 - 74
	Dimensions, notes	6.5 - 136
	Dimensions, 4-pole motors	6.5 - 137
	Additional length of the built-on accessories	6.5 - 206
	Weights, 4-pole motors	6.5 - 208
	Additional weights for gearboxes	6.5 - 210
	Additional weights for motors	6.5 - 210
Product extensions	Overview	6.5 - 213
	Torque plate	6.5 - 215
	Shaft cover	6.5 - 221
Appendix	Gearbox code	6.5 - 223
	Motor code	6.5 - 224

List of abbreviations

α	[rad/s²]	Max. permissible angular acceleration
$\eta_{50\,\%}$	[%]	Efficiency
$\eta_{75\,\%}$	[%]	Efficiency
$\eta_{100\,\%}$	[%]	Efficiency
η_a		Efficiency
$\eta_{c=1}$		Efficiency
c		Load capacity
cos ϕ		Power factor
du/dt	[kV/µs]	Insulation resistance
$F_{ax,-}$	[N]	Min. axial force
$F_{ax,+}$	[N]	Max. axial force
$F_{ax,max}$	[N]	Max. axial force
$f_{in,max}$	[Hz]	Max. input frequency
f_{max}	[kHz]	Limit frequency
f_{max}	[kHz]	Max. switching frequency
f_N	[Hz]	Rated frequency
$F_{rad,max}$	[N]	Max. radial force
f_z		Additional radial force factor
H_{max}	[m]	Site altitude
I_0	[A]	Standstill current
i		Ratio
$I_{in,max}$	[A]	Max. input current
I_{max}	[A]	Max. current consumption
I_{max}	[A]	Max. current
I_{max}	[A]	Max. current consumption
I_{max}	[A]	Max. current
I_{max}	[A]	Max. short-time DC-bus current
I_{max}	[A]	Max. DC-bus current
I_N	[A]	Rated current
$I_{N,\Delta}$	[A]	Rated current
$I_{N,Y}$	[A]	Rated current
J	[kgcm²]	Moment of inertia
J_{MB}	[kgcm²]	Moment of inertia
$KE_{LL\,150\,°C}$	[V /(1000 r/min)]	Voltage constant
$Kt_{0\,150\,°C}$	[Nm/A]	Torque constant
L_{10}	[h]	Bearing service life
L	[mH]	Mutual inductance
$L_{1\sigma}$	[mH]	Stator leakage inductance
$L_{2\sigma}$	[mH]	Rotor leakage inductance
L_N	[mH]	Rated inductance
m	[kg]	Mass
M_2	[Nm]	Output torque
M_{22}	[Nm]	Output torque
M_0	[Nm]	Stall torque
$M_{0,\,max}$	[Nm]	Max. standstill torque
$M_{2,\,GM}$	[Nm]	Output torque
$M_{2,\,max}$	[Nm]	Max. output torque
$M_{2,\,not}$	[Nm]	Emergency off-torque

M_a	[Nm]	Starting torque
$M_{a_,\,1}$	[Nm]	Starting torque
$M_{a_,\,2}$	[Nm]	Starting torque
M_{av}	[Nm]	Average dynamic torque
M_b	[Nm]	Stalling torque
M_B	[Nm]	Braking torque
M_k	[Nm]	Rated torque
M_{max}	[Nm]	Max. torque
M_N	[Nm]	Rated torque
n_2	[r/min]	Output speed
n_{21}	[r/min]	Output speed
n_{22}	[r/min]	Output speed
$n_{1,\,max}$	[r/min]	Max. gearbox input speed
$n_{1,\,max\,50\%}$	[r/min]	Max. gearbox input speed
n_{eto}	[r/min]	Transition speed
n_k	[r/min]	Speed
n_{max}	[r/min]	Max. speed
n_N	[r/min]	Rated speed
P_{max}	[kW]	Max. power input
Q_{BW}	[MJ]	Friction energy
Q_E	[J]	Maximum switching energy
Q_E	[KJ]	Maximum switching energy
R_1	[Ω]	Stator impedance
R_2	[Ω]	Rotor impedance
R	[Ω]	Insulation resistance
R	[Ω]	Min. insulation resistance
$R_{UV\,150\,°C}$	[Ω]	Stator impedance
$R_{UV\,20\,°C}$	[Ω]	Stator impedance
$S_{hü}$	[1/h]	Transition operating frequency
t_1	[ms]	Engagement time
t_2	[ms]	Disengagement time
t_{11}	[ms]	Delay time
t_{12}	[ms]	Rise time
T	[°C]	Max. surface temperature
T	[°C]	Min. ambient temperature for transport
T	[°C]	Max. ambient temperature for transport
T	[°C]	Max. ambient temperature of bearing
T	[°C]	Min. ambient storage temperature
T	[°C]	Ambient temperature
T	[°C]	Operating temperature
T	[°C]	Rated temperature
t	[h]	Service life
T_{opr}		Ambient operating temperature
$T_{opr,max}$	[°C]	Max. ambient operating temperature
$T_{opr,min}$	[°C]	Min. ambient operating temperature
t_{re}	[s]	Recovery time
$t_{ü}$	[ms]	Overexcitation time
U_Δ	[V]	Voltage range
U_{AC}	[V]	Mains voltage range

List of abbreviations

U_{AC}	[V]	Mains voltage
$U_{in,max}$	[V]	Max. input voltage
$U_{in,min}$	[V]	Min. input voltage
U_{max}	[V]	Max. input voltage
U_{max}	[V]	Max. mains voltage
U_{min}	[V]	Min. mains voltage
$U_{N, \Delta}$	[V]	Rated voltage
$U_{N, AC}$	[V]	Rated voltage
$U_{N, DC}$	[V]	Rated voltage
$U_{N, Y}$	[V]	Rated voltage
z_g		Number of teeth
Z_{ro}	[Ω]	Rotor impedance
Z_{rs}	[Ω]	Impedance
Z_{so}	[Ω]	Stator impedance
z_t		Number of teeth

CCC	China Compulsory Certificate
CE	Communauté Européenne
CEL	China Energy Label
CSA	Canadian Standards Association
CSAULE	Energy Verified Certificate
cURus	Combined certification marks of UL for the USA and Canada
DIN	Deutsches Institut für Normung e.V.
EAC	Customs union Russia / Belarus / Kazakhstan certificate
EMC	Electromagnetic compatibility
EN	European standard
IM	International Mounting Code
IP	International Protection Code
NEMA	National Electrical Manufacturers Association
UkrSEPRO	Certificate for Ukraine
UL	Underwriters Laboratory Listed Product
UR	Underwriters Laboratory Recognized Product
VDE	Verband deutscher Elektrotechniker (Association of German Electrical Engineers)

Product information

In combination with three-phase AC motors, our bevel gearboxes form a compact and powerful drive unit. Numerous options at the input and output end provide for the drive to be exactly adapted to your application.

The efficient bevel gearboxes feature high reliable radial forces, closely stepped gear reductions and a low backlash. They are available in 2-stage and 3-stage design with a torque up to 20000 Nm and a ratio of up to i= 360.

Versions

- High-efficient right-angle gearbox in a compact design for space-saving installation
- Standardised shaft and flange dimensions for an easy machine integration
- Low backlash and high torsional stiffness provide for exact results in positioning applications

Three-phase AC motors as a basis for geared motors

In a power range of 0.06 to 55 kW, Lenze offers inverter-compatible three-phase AC motors for comprehensive tasks.
These drives come in different efficiency classes and can be used for the versions required for the versions required for open-loop or closed-loop controlled inverter operation.

- IE1 motors up to a power of 0.55 kW
- IE3 motors from 0.75 kW to 55 kW

Customer benefit:

- Different efficiency classes for the greatest economic benefit
- Space-saving thanks to compact direct attachment to Lenze gear-boxes
- Can be used universally for a wide range of machine tasks due to the market-oriented modular system

The product name

Gearbox type	Product range		Design	Rated torque [Nm]	Product
Bevel gearbox	g500	-	B	45	g500-B45
				110	g500-B110
				240	g500-B240
				450	g500-B450
				600	g500-B600
				820	g500-B820
				1500	g500-B1500
				2700	g500-B2700
				4300	g500-B4300
				8000	g500-B8000
				13000	g500-B13000
				20000	g500-B20000

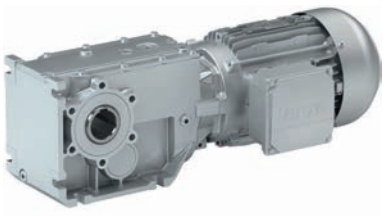

g500-B bevel gearbox with three-phase AC motor

g500-B bevel gearbox with three-phase AC motor and 8400 motec inverter

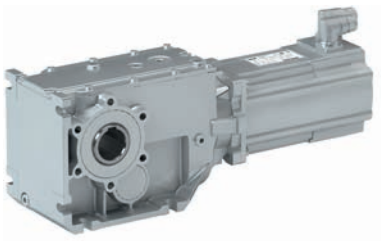

g500-B bevel gearbox with servo motor

Equipment

Overview

The equipment includes all the options available as standard and all the built-on accessories of the product.

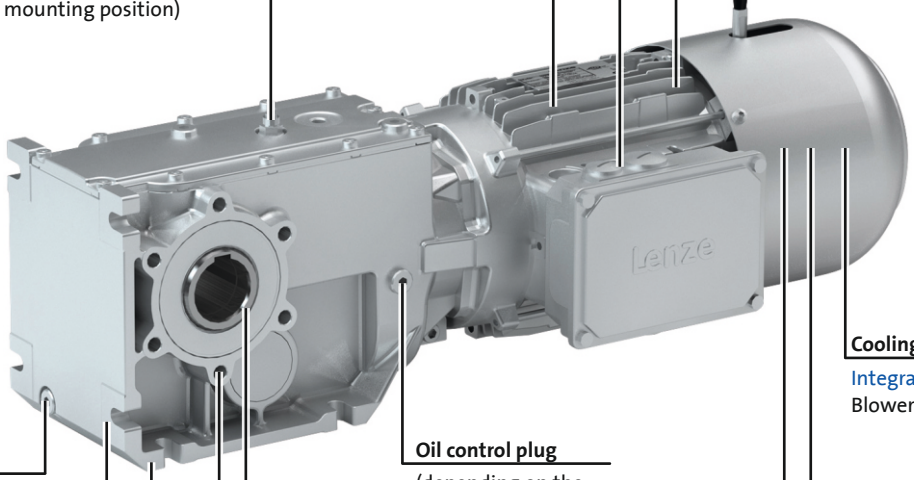

Standard design

- ► For the m540 motor, only temperature monitoring with PTC is available.
- ► The gearbox g500-B8000 comes with a standard housing type without foot.

11 - Detailed information on housing type.

Equipment

Mounting position, position of system components

- ► In the following graphics, the terminal box in position 2 is colour-coded.
  If the mounting position (A ... F) changes, the terminal box positions 2 ... 5 are rotated accordingly.
- ► To reduce the number of different versions, the gearboxes can also be ordered with combined mounting positions:
  - g500-B45 in mounting position ABCDEF
  - g500-B110 ... B450 in mounting position AEF

Mounting positions A ... F

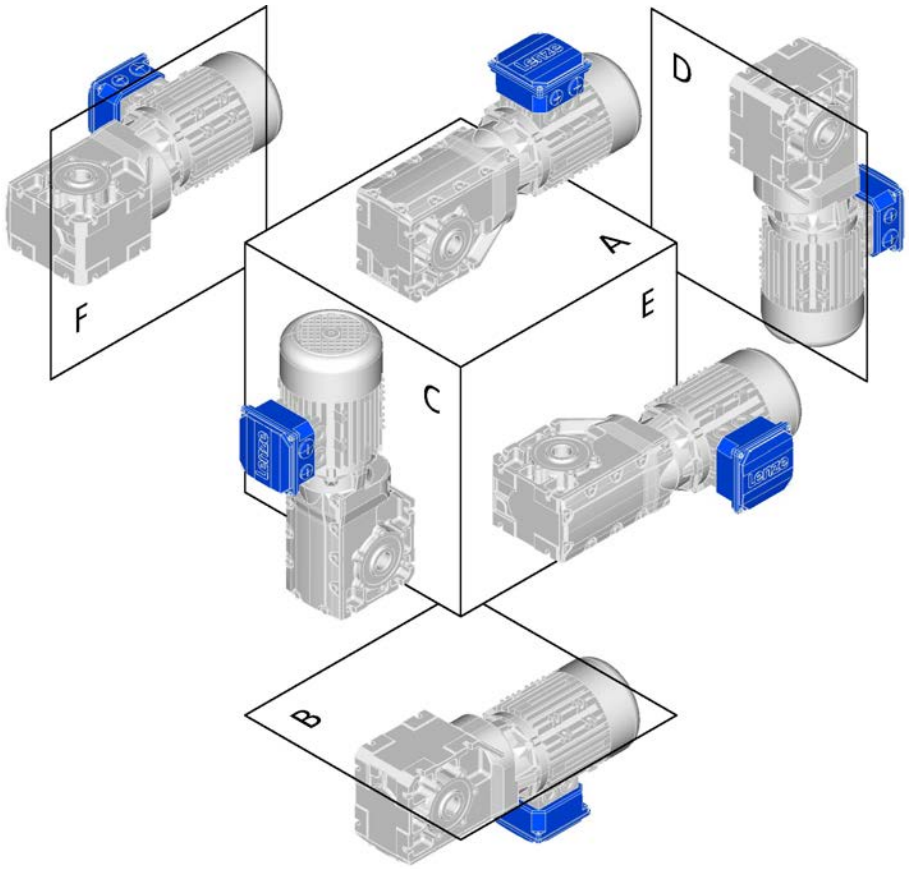

Terminal box positions 2 ... 5

Cable entry positions 1 ... 5

- ► For details regarding the cable entry see motor chapter/product extensions.

Equipment

Mounting position, position of system components

Solid shaft position 3 or 5
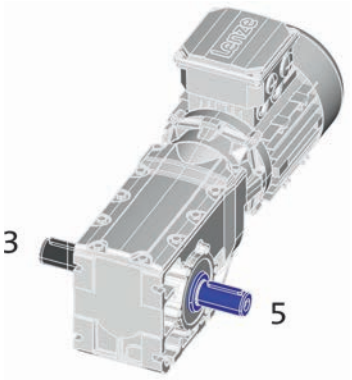

Shrink disc position 3 or 5
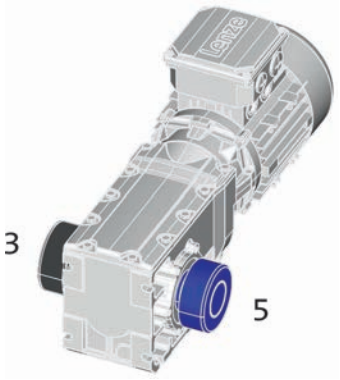

Flange position 3 or 5
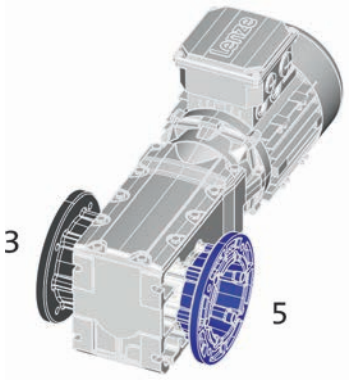

The geared motor kit

g500-B45 ... B450

Product				
Gearbox	g500-B45	g500-B110	g500-B240	g500-B450
Motor assignment min.	MD□MA□□-063	MD□MA□□-063	MD□MA□□-063	MD□MA□□-063
Motor assignment max.	MD□MA□□-071	m550-P90	m550-P100	m550-P132
Technical data				
Output torque max.	45 Nm	110 Nm	240 Nm	450 Nm
Drive power min.	0.06 kW	0.12 kW	0.12 kW	0.12 kW
Drive power max.	0.55 kW	1.5 kW	3.0 kW	7.5 kW
Dimensions [mm]				
Solid shaft with featherkey	20 x 40	20 x 40	30 x 60	30 x 60
Hollow shaft with keyway	18/20	20/25	30/35	35/40
Hollow shaft with shrink disc	20	20	30/35	35
Output flange	110/120	120/160	160/200	200

- ► The designs are only available for the gearboxes displayed above in the table.
- ► Values printed in bold are standard versions.
  Values not printed in bold are possible extensions, some for an additional charge.

Design	
Conformity	**CE** EAC
Approval	**Without** CCC/cURus
Degree of protection	**IP55** IP65/IP66
Surface and corrosion protection	**Without** Different types of OKS
Colour	**Not coated** Primed/RAL colours
Hollow shaft	**With keyway (H□□)**
Hollow shaft with shrink disc	Without keyway (S□□)
Solid shaft	With featherkey (V□□)
Shaft material	**Steel** stainless steel
Shaft sealing ring material	**NBR** FKM (Viton)
Driven shaft bearing	**Normal**
Paste for shaft mounting	**Without** Enclosed
Gearbox type	**With foot (□BR)** With foot and centering (□AR) With foot and output flange (□AK)
Lubricant	**Mineral oil** Synthetic oil Food-compatible oil

Design	
Mounting position	**A/B/C/D/E/F** Combined
Power connection	**Terminal box** Plug connectors
Spring-applied brake	**Without** Brake design: Standard/Longlife Brake version: Standard/Overexcited/Cold Brake
Feedback	**Without** Resolver Absolute value encoder Incremental encoder
Cooling	**Integral fan** Blower
Temperature monitoring	**TKO thermal contact** PTC thermistor KTY thermal detector

The geared motor kit

g500-B45 ... B450

Gearbox design: hollow shaft, with foot

Gearbox design: hollow shaft with shrink disc, with foot

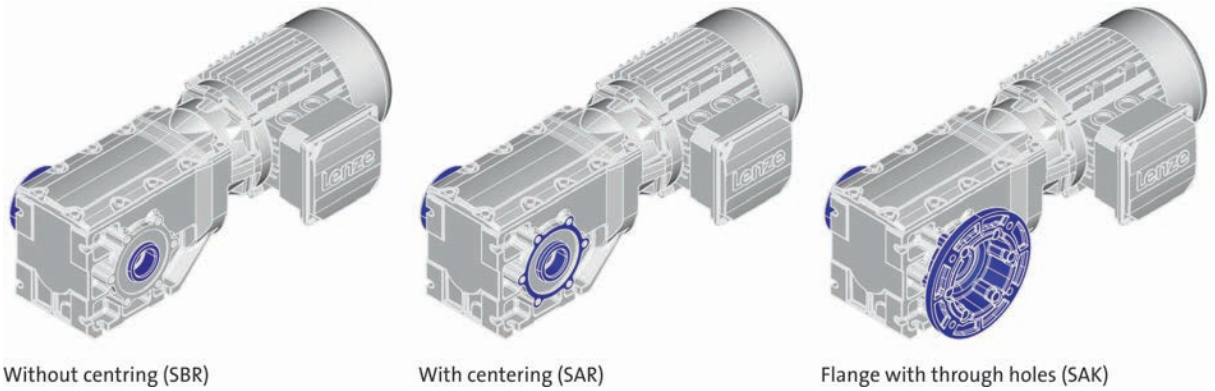

Gearbox design: solid shaft, with foot

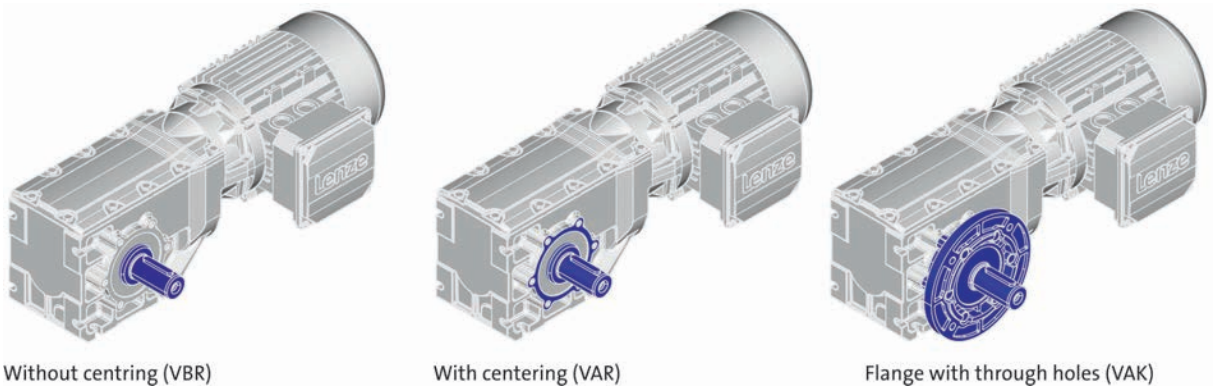

The geared motor kit

g500-B600 ... B4300

Product					
Gearbox	g500-B600	g500-B820	g500-B1500	g500-B2700	g500-B4300
Motor assignment min.	MD□MA□□-063	MD□MA□□-063	MD□MA□□-071	m550-P90	m550-P90
Motor assignment max.	m550-P132	m550-P132	m550-P180	m550-P180	m550-P180
Technical data					
Output torque max.	600 Nm	820 Nm	1500 Nm	2700 Nm	4300 Nm
Drive power min.	0.25 kW	0.25 kW	0.55 kW	1.1 kW	1.1 kW
Drive power max.	7.5 kW	7.5 kW	22 kW	30 kW	30 kW
Dimensions [mm]					
Solid shaft with featherkey	40 x 80	40 x 80	50 x 100	60 x 120	70 x 140
Hollow shaft with keyway	40/45	40/45	50/55	60/70	70/80
Hollow shaft with shrink disc	40	40	50	65	75/80
Output flange	200/250	200/250	250/300	350	400/450

- ► The designs are only available for the gearboxes displayed above in the table.
- ► Values printed in bold are standard versions.
  Values not printed in bold are possible extensions, some for an additional charge.

Design	
Conformity	**CE** EAC
Approval	**Without** CCC/cURus
Degree of protection	**IP55** IP65/IP66
Surface and corrosion protection	**OKS-S** Different types of OKS
Colour	**Painted in RAL colours** Primed
Hollow shaft	**With keyway (H□□)**
Hollow shaft with shrink disc	Without keyway (S□□)
Solid shaft	With featherkey (V□□)
Shaft material	**Steel** stainless steel
Shaft sealing ring material	**NBR** FKM (Viton)
Driven shaft bearing	**Normal**
Paste for shaft mounting	**Without** Enclosed
Gearbox type	**With foot (□BR)** With foot and centering (□AR) With foot and output flange (□AK)
Lubricant	**Mineral oil** Synthetic oil Food-compatible oil

Design	
Mounting position	**A/B/C/D/E/F**
Power connection	**Terminal box** Plug connectors
Spring-applied brake	**Without** Brake design: Standard/Longlife Brake version: Standard/Overexcited/Cold Brake
Feedback	**Without** Resolver Absolute value encoder Incremental encoder
Cooling	**Integral fan** Blower
Temperature monitoring	**TKO thermal contact** PTC thermistor KTY thermal detector

The geared motor kit

g500-B600 ... B4300

Gearbox design: hollow shaft, with foot

Gearbox design: hollow shaft with shrink disc, with foot

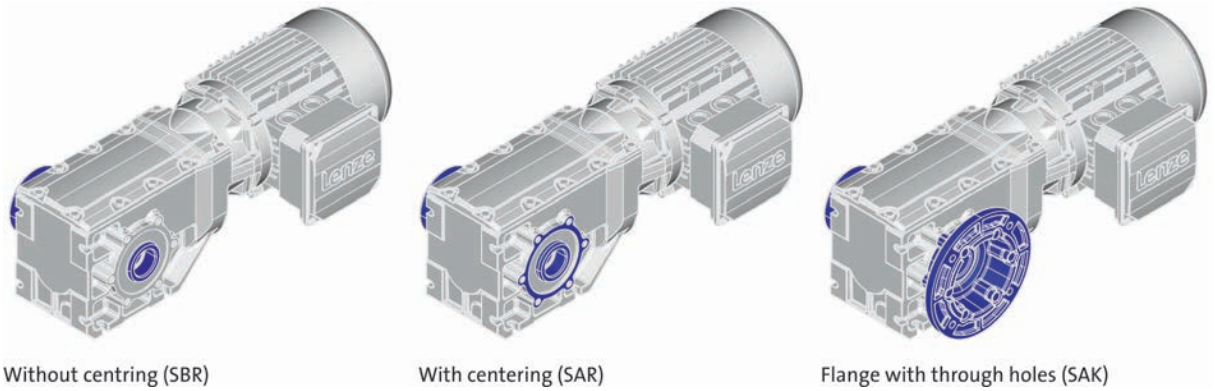

Gearbox design: solid shaft, with foot

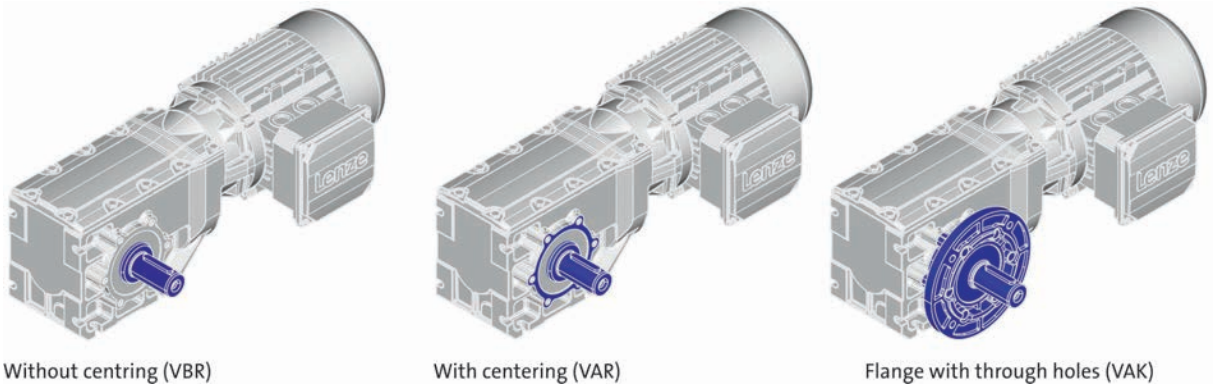

The geared motor kit

g500-B8000 ... B20000

Product			
Gearbox	g500-B8000	g500-B13000	g500-B20000
Motor assignment min.	m540-P90	m540-P100	m540-P112
Motor assignment max.	m540-P250	m540-P250	m540-P250
Technical data			
Output torque max.	8000 Nm	13000 Nm	20000 Nm
Drive power min.	1.5 kW	2.2 kW	4.0 kW
Drive power max.	55 kW	55 kW	55 kW
Dimensions [mm]			
Solid shaft with featherkey	90 x 170	110 x 210	120 x 210
Hollow shaft with keyway	90	100	120
Hollow shaft with shrink disc	95	105	125
Output flange	450	550	660

- ► The designs are only available for the gearboxes displayed above in the table.
- ► Values printed in bold are standard versions.
  Values not printed in bold are possible extensions, some for an additional charge.

Design	
Conformity	**CE** EAC
Approval	**Without** CSA/cURus
Degree of protection	**IP55** IP65
Surface and corrosion protection	**OKS-S** Different types of OKS
Colour	**Painted in RAL colours** Primed
Hollow shaft	**With keyway (H□□)**
Hollow shaft with shrink disc	Without keyway (S□□)
Solid shaft	With featherkey (V□□)
Shaft material	**Steel**
Shaft sealing ring material	**NBR**
Driven shaft bearing	**Normal**
Paste for shaft mounting	**Without**
Gearbox type	**Without foot and centering (□DR)** [1] **With foot (□BR)** [2] With centering (□CR) [1] With output flange (□CK) [1] With foot and centering (□AR) [2] With foot and output flange (□AK) [2]
Lubricant	**Mineral oil** Synthetic oil Food-compatible oil

[1] Only with g500-B8000.
[2] Only with g500-B13000 and B20000.

Design	
Mounting position	**A/B/C/D/E/F**
Power connection	**Terminal box** Plug connectors
Spring-applied brake	**Without** Brake design: Standard brake version: Standard
Feedback	**Without** Incremental encoder
Cooling	**Integral fan** Blower
Temperature monitoring	**PTC thermistor**

The geared motor kit

g500-B8000

Gearbox design: hollow shaft, with foot
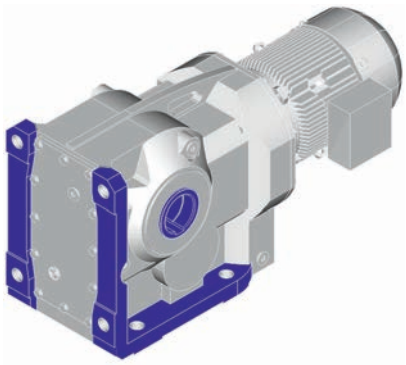 Without centring (HBR)

Gearbox design: hollow shaft, without foot		
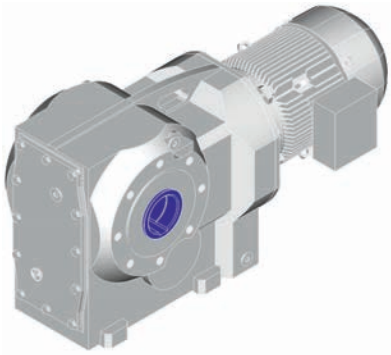 Without centring (HDR)	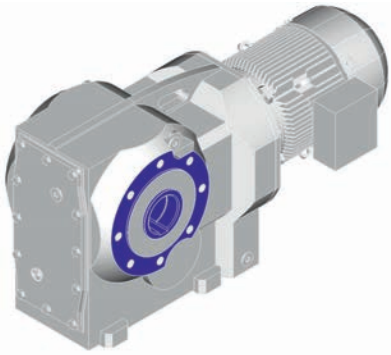 With centering (HCR)	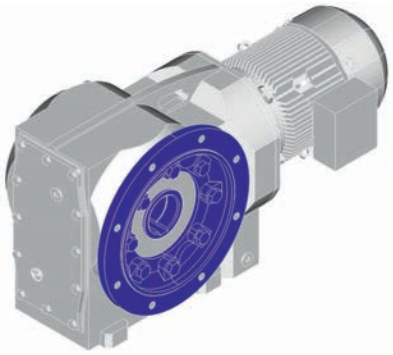 Flange with through holes (HCK)

The geared motor kit

g500-B8000

Gearbox design: hollow shaft with shrink disc, with foot
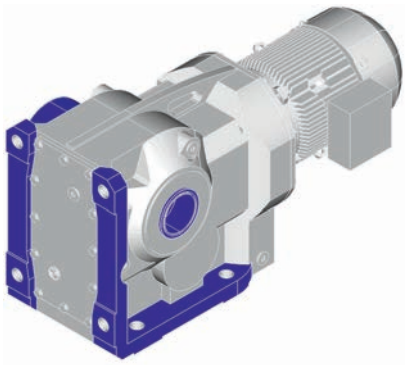 Without centring (SBR)

Gearbox design: hollow shaft with shrink disc, without foot		
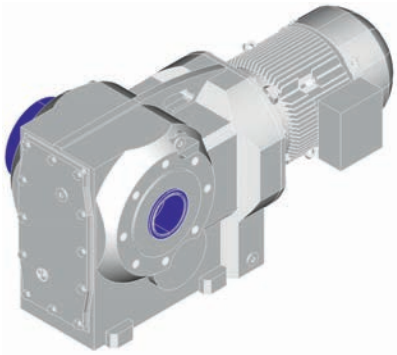 Without centring (SDR)	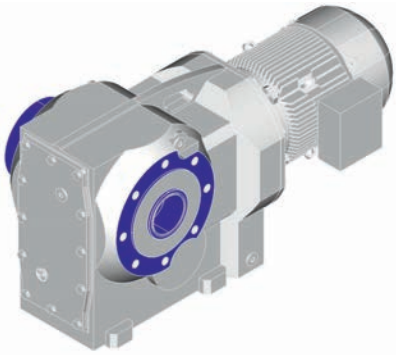 With centering (SCR)	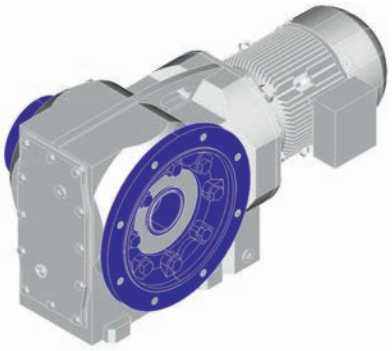 Flange with through holes (SCK)

The geared motor kit

g500-B8000

Gearbox design: solid shaft, with foot
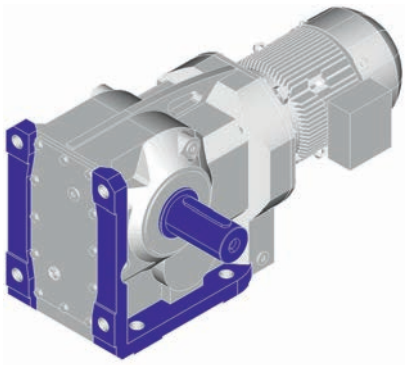 Without centring (VBR)

Gearbox design: solid shaft, without foot	
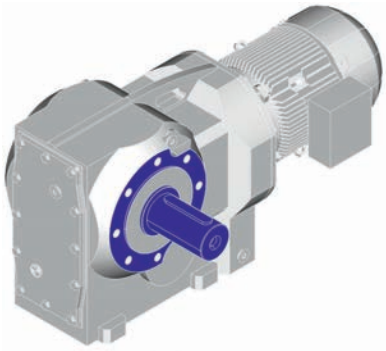 With centering (VCR)	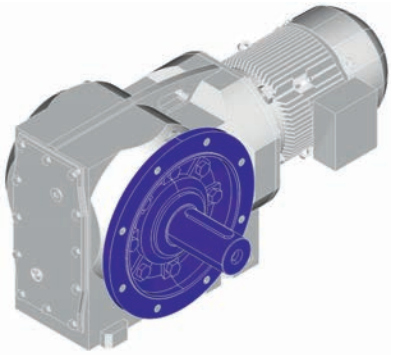 Flange with through holes (VCK)

The geared motor kit

g500-B13000 ... 20000

Gearbox design: hollow shaft, with foot		
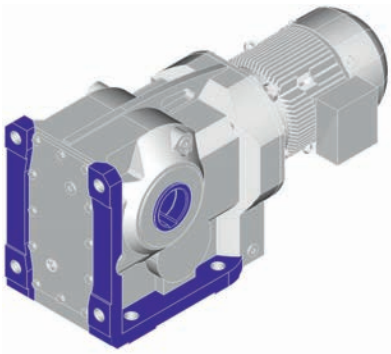	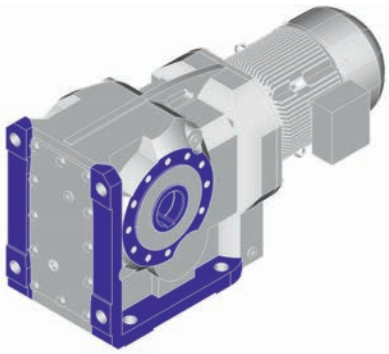	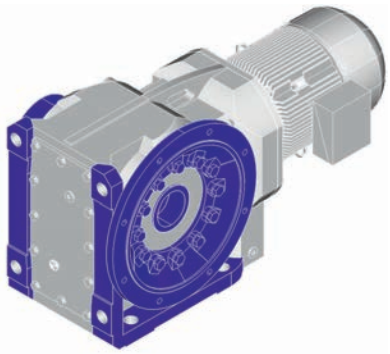
Without centring (HBR)	With centering (HAR)	Flange with through holes (HAK)

Gearbox design: hollow shaft with shrink disc, with foot		
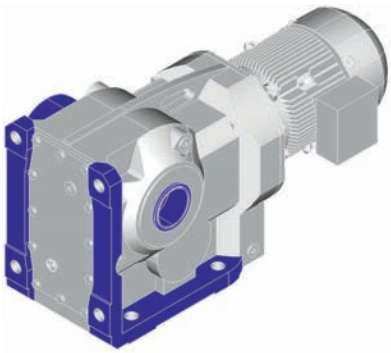	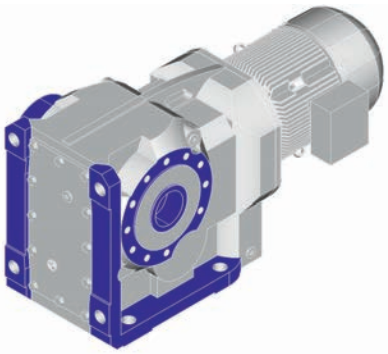	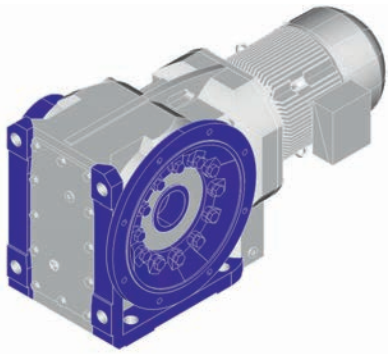
Without centring (SBR)	With centering (SAR)	Flange with through holes (SAK)

The geared motor kit

g500-B13000 ... 20000

Gearbox design: solid shaft, with foot
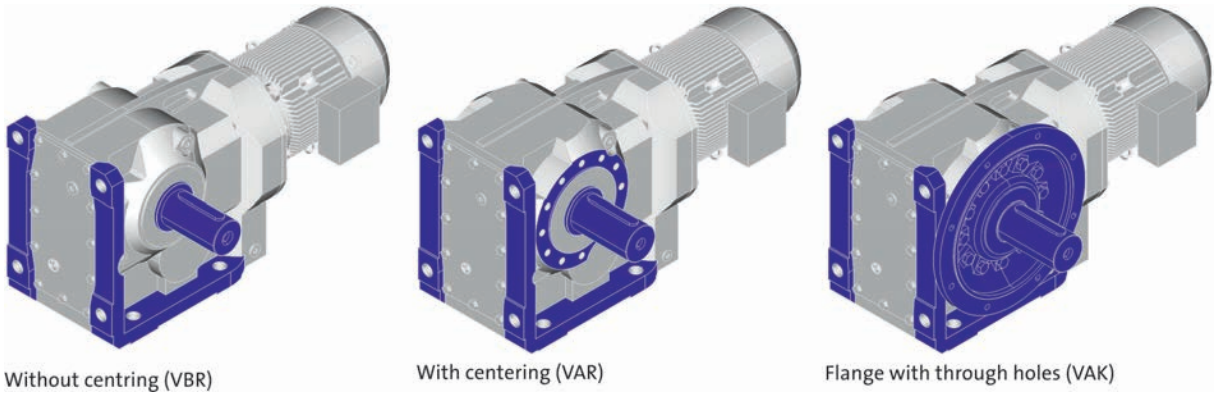

General information about the data provided in this catalogue

The powers, torques and speeds specified in this catalogue are rounded values and are valid under the following conditions:

- Operating time/day = 8 h (100% OT)
- Duty class I for up to 10 switching operations/h
- Mounting positions and designs in this catalogue
- Standard lubricant
- T_{amb} = 20 °C for gearboxes,
  T_{amb} = 40 °C for motors (in accordance with EN 60034)
- Site altitude ≤ 1000 m amsl
- The selection tables provide the permissible mechanical powers and torques. For notes on the thermal power limit, see chapter drive dimensioning.
- The rated power specified for motors and geared motors applies to operating mode S1 (in accordance with EN 60034).

Under different operating conditions, the values obtained may vary from those listed here.
In the case of extreme operating conditions, please consult your Lenze sales office.

Procedure of a configuration process

Workflow

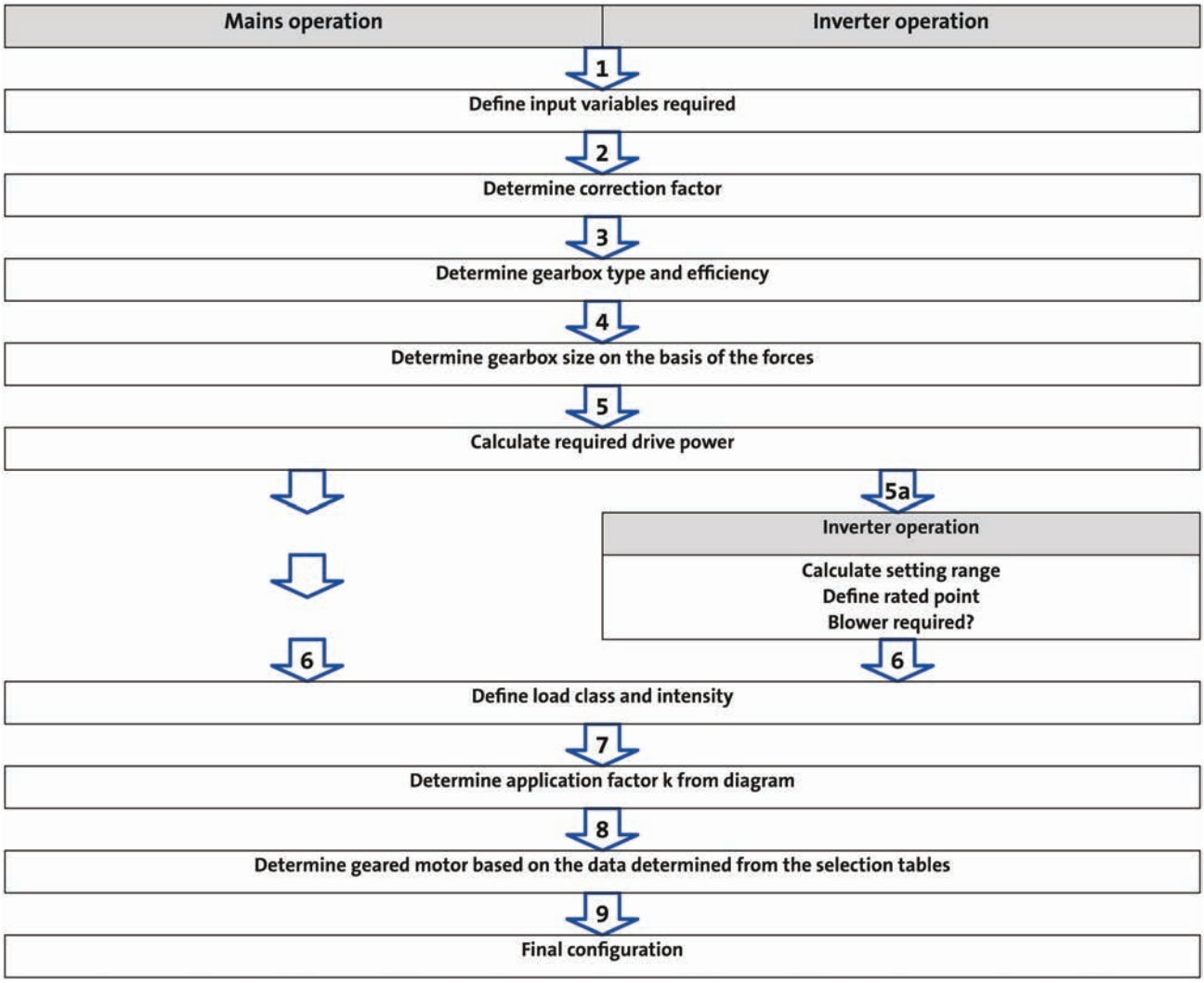

You can use our configuring software Drive Solution Designer for precise drive dimensioning.

The Drive Solution Designer helps you to carry out a fast and high-quality drive dimensioning.
The software includes well-founded and proven knowledge on drive applications and electro-mechanical drive components.

Please contact your Lenze sales office.

Procedure of a configuration process

1 required input variables

Load torque		$M_{L,max}$=	[Nm]
	In inverter operation	$M_{L,min}$=	[Nm]
Load speed		$n_{L,max}$=	[r/min]
	In inverter operation	$n_{L,min}$=	[r/min]
External moments of inertia		J_{ext}=	[$kgcm^2$]
Operating time / day		BD =	[h]
Switching operations per h		S_h=	[1/h]
Runtime for $M_{L,max}$	In inverter operation		[%]

2 determine correction factor

Operating modes and operating time						
S1	ED	[%]	100			
	k_L =		1.0			
S2	ED	[%]	10	30	60	90
	k_L =		1.4 - 1.5	1.15 - 1.2	1.07 - 1.1	1.0 - 1.05
S3	ED	[%]	15	25	40	60
	k_L =		1.4 - 1.5	1.3 - 1.4	1.15 - 1.2	1.05 - 1.1
S6	ED	[%]	15	25	40	60
	k_L =		1.5 - 1.6	1.4 - 1.5	1.3 - 1.4	1.15 - 1.2
Site altitude						
	H	[m]	≤ 1000	≤ 2000	≤ 3000	≤ 4000
	k_H =		1	0.95	0.9	0.85
Ambient temperature						
	T_U =	[°C]	≤ 40	≤ 45	≤ 50	≤ 55
	k_{TU} =		1	0.95	0.9	0.8

30 - Operating modes

Procedure of a configuration process

3 determine gearbox type and efficiency

Gearbox type			Axial gearboxes		Right-angle gearboxes
			Helical gearbox	Shaft-mounted	Bevel gearbox
Product			g500-H	g500-S	g500-B
Gearbox efficiency	2-stage gearboxes	η_G	0.96	0.96	0.96
	3-stage gearboxes	η_G	0.95	0.95	0.95

4 determine gearbox size based on the forces on the output

Transmission element		Gear wheels	Sprockets	Toothed belt pulleys (depending on the initial stress)	Narrow V-belt (depending on the initial stress)
Additional radial force factor	f_z =	≥ 17 teeth = 1.0 < 17 teeth = 1.15	≥ 20 teeth = 1.0 < 20 teeth = 1.25 < 13 teeth = 1.4	With belt tightener = 2.0 - 2.5 Without belt tightener = 2.5 - 3.0	1.5 - 2.0
		Calculation		**Check**	
Radial force	[N]	$F_{rad} = 2000 \times \frac{M_{L,max} \times f_z}{dw}$		$F_{rad} \leq f_w \times F_{rad,max}$	
Axial force	[N]			$F_{ax} \leq F_{rad,max} \times 0.5$	

d_w= effective diameter [mm] transmission element
f_w= additional load factor

► For permissible radial and axial forces and additional load factor see the "Technical data" chapter

5 calculate drive power

		Calculation	
Drive power required	[kW]	$P_1 = \frac{M_{L,max} \times n_{L,max}}{9549 \times k_L \times k_H \times k_{Tu} \times \eta_g}$	

k_L= Correction factor - operating mode
k_H= correction factor - installation height
k_{TU}= correction factor - ambient temperature

Procedure of a configuration process - mains operation

6 calculate intensity and determine duty class

Load class	Load type	Intensity
I	Smooth operation, small or light jolts	$F_I \leq 1.25$
II	Uneven operation, average jolts	$1.25 < F_I \leq 4$
III	Uneven operation, severe jolts and/or **alternating load**	$F_I > 4$

31 - Duty classes

	Calculation	
Intensity	$F_I = \frac{\frac{J_L}{i^2} + J_M + J_B + J_Z}{J_M + J_B + J_Z}$	

i= gearbox ratio
J_L= moment of inertia of the load
J_M= moment of inertia of the motor
J_B= moment of inertia of the brake
J_Z= additional moment of inertia (handwheel, 2nd shaft end ...)

7 determine application factor k from diagram

34 - Load capacity and application factor

Procedure of a configuration process - mains operation

8 determine geared motor based on the data determined from the selection tables

Selection table		Check
Drive power P_N	[kW]	$P_1 \leq P_N$
Output speed n_2	[r/min]	$n_{L,max} \approx n_2$
Output torque M_2	[Nm]	$M_{L,max} \leq M_2$
Load factor c		$k \leq c$
Order information		**Example**
Number of stages		2
Ratio i		3.267
Product gearbox		g500-H140
Product motor		m550-P80/M4

34 - Load capacity and application factor

Example: structure of a selection table

50 Hz: P_N = 0.75 kW ← Rated power P_N

2-stage gearboxes ← Number of the gear stage

Mains operation 400 V, 50 Hz			Inverter operation 5 Hz -		- 20 Hz		- 50 Hz (1:10)			- 87 Hz (1:17.4)			i	Product		
n_2 [r/min]	M_2 [Nm]	c	n_{22} [r/min]	M_{22} [Nm]	n_{21} [r/min]	M_2 [Nm]	n_2 [r/min]	M_2 [Nm]	c	n_2 [r/min]	M_2 [Nm]	c		g500	m5□□	
444	16	4.3	44	12	184	16	444	16	4.3	784	16	3.5	3.267	-H140	50-P80/M4	
432	16	3.9	43	12	179	16	432	16	3.9	763	16	3.2	3.354	-H100	50-P80/M4	

Output speed n_2 ↑ Output torque M_2 ↑ Load capacity **c** ↑

Ratio i ↑ Product Gearbox ↑ Product Motor ↑

Procedure of a configuration process - inverter operation

5a calculate range of adjustment and determine rated point

		Calculation	
Setting range		$V = \frac{n_{L,max}}{n_{L,min}}$	
Setting range	Motor with integral fan	≤ 2.5 (20 ... 50 Hz)	≤ 4.35 (20 ... 87 Hz)
	Motor with blower	≤ 10 (5 ... 50 Hz)	≤ 17.4 (5 ... 87 Hz)
Rated point at		50 Hz	87 Hz

6 calculate intensity and determine duty class

	Calculation		
Intensity	$M_I = \frac{M_{L,max}}{M_{L,min}}$	**For alternating load, select load class III!**	
Load class	Load type		Intensity
I	Smooth operation, small or light jolts		$M_I \leq 1.5$
II	Uneven operation, average jolts		$1.5 < M_I \leq 2$
III	Uneven operation, severe jolts and/or alternating load		$2 < M_I \leq 2.5$

31 - Duty classes

7 determine application factor k from diagram

34 - Load capacity and application factor

Procedure of a configuration process - inverter operation

8 determine geared motor based on the data determined from the selection tables

Selection table			Check	
Drive power P_N		[kW]	$P_1 \leq P_N$	
Max. output speed n_2		[r/min]	$n_{L,max} \approx n_2$	
Min. output speed n_{21}	Self-ventilated	[r/min]	$n_{L,min} \approx n_{21}$	Setting range 2.5 (50 Hz) Setting range ≤ 4.35 (87 Hz)
Min. output speed n_{22}	Forced-ventilated	[r/min]	$n_{L,min} \approx n_{22}$	Setting range ≤ 10 (50 Hz) Setting range ≤ 17.4 (87 Hz)
	Self-ventilated (Reduced output torque)	[r/min]	$n_{L,min} \approx n_{22}$	
Output torque M_2		[Nm]	$M_{L,max} \leq M_2$	
Load factor c			$k \leq c$	
Order information			**Example**	
Number of stages			2	
Ratio i			3.267	
Product gearbox			g500-H140	
Product motor			m550-P80/M4	

34 - Load capacity and application factor
37 - Torque derating at low motor frequencies

Example: structure of a selection table

50 Hz: P_N = 0.75 kW
87 Hz: P_N = 1.35 kW ← Rated power P_N

2-stage gearboxes ← Number of the gear stage

Mains operation 400 V, 50 Hz			Inverter operation 5 Hz -		- 20 Hz		- 50 Hz (1:10)			- 87 Hz (1:17.4)			i	Product		
n_2 [r/min]	M_2 [Nm]	c	n_{22} [r/min]	M_{22} [Nm]	n_{21} [r/min]	M_2 [Nm]	n_2 [r/min]	M_2 [Nm]	c	n_2 [r/min]	M_2 [Nm]	c		g500	m550	
444	16	4.3	44	12	184	16	444	16	4.3	784	16	3.5	3.267	-H140	-P80/M4	
432	16	3.9	43	12	179	16	432	16	3.9	763	16	3.2	3.354	-H100	-P80/M4	

Min. Output speed n_{22}
Min. Output torque M_2
Min. Output speed n_{21}
Max. Output speed n_2
Max. Output torque M_2
Load capacity c
Ratio i
Product Gearbox
Product Motor

Procedure of a configuration process

9 Final configuration

More information regarding the final configuration can be found under: **- The modular geared motor system** **- Product extensions for gearboxes, motors**	
Check operating conditions	- Operating temperature (observe lubricant, material of shaft sealing ring) - Degree of protection - Supply voltage - Surface protection required - Approvals - Conformity
Check and define connection dimensions	- Driven shaft - Foot, output flange, centering with threaded pitch circle
Determine mounting position and position of the system blocks	- Mounting position A/B/C/D/E/F or combined - Terminal box position, shaft position, flange position
Select product extensions at the gearbox (differing depending on the gearbox type)	- Torque plate at the base, threaded pitch circle, rubber buffer - Hollow shaft cover, shrink disc cover
Select product extensions at the motor	- Connection type (terminal box, connector) - Brake - Blower (inverter operation) - Feedback - Temperature monitoring

Standards

Operating modes

Operating modes S1 ... S10 as specified by EN 60034-1 describe the basic stress of an electrical machine.

In continuous operation a motor reaches its permissible temperature limit if it outputs the rated power dimensioned for continuous operation. However, if the motor is only subjected to load for a short time, the power output by the motor may be greater without the motor reaching its permissible temperature limit. This behaviour is referred to as overload capacity.
Depending on the duration of the load and the resulting temperature rise, the required motor can be selected reduced by the overload capacity.

The most important operating modes

Continuous operation S1	Short-time operation S2
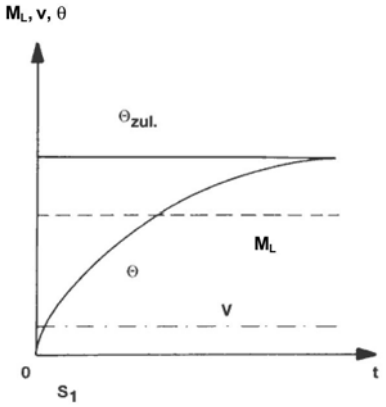	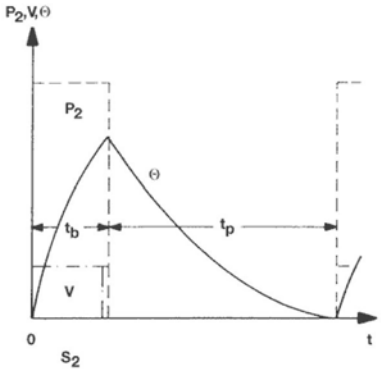
Operation with a constant load until the motor reaches the thermal steady state. The motor may be actuated continuously with its rated power.	Operation with constant load; however, the motor does not reach the thermal steady state. During the following standstill, the motor winding cools down to the ambient temperature again. The increase in power depends on the load duration.

Intermittent operation S3	Non-intermittent periodic operation S6
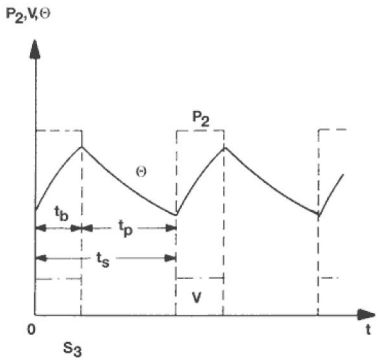	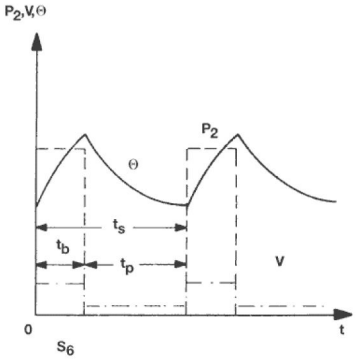
-	-

Standards

Duty classes

Depending on the load type, the duty classes or impacts are divided as follows:

Duty class	Load type
I	Smooth operation, small or light jolts
II	Uneven operation, average jolts
III	Uneven operation, severe jolts and/or alternating load

In order to support you in classifying your driven machine regarding the right duty class, the following shows sample applications with the corresponding duty class. Depending on, for instance, the operating frequency, driven machines can also have a higher impact.
In case of uncertainties, please contact your Lenze sales office.

Drive	Duty class
Construction machines	II
Chemical industry	II
Conveyors	II
Fans	II
Plastics industry	II
Wood working	III
Hoists	III
Metal working	III
Food	II
Paper industry	III
Stones	III
Textile industry	II

Standards

Degrees of protection

The degree of protection indicates the suitability of a motor for specific ambient conditions with regard to humidity as well as the protection against contact and the ingress of foreign particles. The degrees of protectionare classified by EN 60529.

The first code number after the code letters IP indicates the protection against the ingress of foreign particles and dust.
The second code number refers to the protection against the ingress of humidity.

Code number 1	Degree of protection	Code number 2	Degree of protection
0	No protection	0	No protection
1	Protection against the ingress of foreign particles d > 50 mm. No protection in the case of deliberate access	1	Protection against vertically dripping water (dripping water).
2	Protection against medium-sized foreign particles, d > 12 mm, keeping away fingers or similar	2	Protection against diagonally falling water (dripping water), 15 ° compared to normal service position.
3	Protection against small foreign particles d > 2.5 mm. Keeping away tools, wires and the like	3	Protection against spraying water, up to 60 ° to the vertical
4	Protection against granular foreign particles, d > 1 mm, keeping away tools, wires and the like	4	Protection against spraying water from all directions.
5	Protection against dust deposits (dust-protected), complete protection against contact.	5	Protection against water jets from all directions.
6	Protection against the ingress of dust (dust-proof), complete protection against contact.	6	Protection against choppy seas or heavy water jets (flood protection).

Thermal power limit

The thermal power limit, defined by the heat balance, limits the permissible permanent gearbox power.
It is affected by:
- the churning losses in the lubricant. These are determined by the mounting position and the circumferential speed of the gears;
- the load and the speed;
- the ambient conditions: temperature, air circulation, input or dissipation of heat via shafts and the foundations.

We ask you to make a thermal check with the Drive Solution Designer (DSD) or contact the Lenze office responsible for you

- if the input speed n1 > 1500 r/min is exceeded in case of the gearbox ratios given in the following (can be e.g. recognised by the empty cells in the selection tables):

g500 thermal power limit	
Product	Ratio i
g500-H850 ... H3000	≤ 10
g500-S2100 ... S4500	≤ 16
g500-B1500 ... B4300	≤ 25

g500 thermal power limit	
Product	Ratio i
g500-H5000 ... H14000	≤ 25
g500-S8000 ... S19000	≤ 40
g500-B8000 ... B20000	≤ 60

- If the drive speeds mentioned in the following will be exceeded as a function of the mounting position:

g500 thermal power limit			
Product	Mounting position A	Mounting position A, B, E, F	Mounting position C, D
MD□MA□□063 ... 100 MH□MA□□063 ... 100	4000 r/min	3500 rpm	3000 r/min
MD□MA□□112 ... 132 MH□MA□□112 ... 132 m240-P112 ... P132 m550-P112 ... P132	3000 r/min	2600 rpm	1500 r/min
MD□MA□□160 ... 180 MH□MA□□160 ... 180 m240-P160 ... P180 m550-P160 ... P180	2000 r/min	1800 rpm	1500 r/min
m540-P90 ... P250	1500 r/min	1500 r/min	1500 r/min

► For a short period of time up to 5 min, 30 % higher speeds are permissible

Possible ways of extending the application area

- Synthetic lubricant (option)
- Shaft sealing rings made from FKM material/Viton (option)
- Reduction in lubricant quantity (after consultation with Lenze)
- Cooling of the geared motor by means of air convection on the machine/system

Load capacity and application factor

Load capacity c of gearboxes
Rated value for the load capacity of Lenze geared motors.
- c is the ratio of the permissible rated torque of the gearbox to the rated torque supplied by the drive component (e.g. the built-in Lenze motor).
- The value of c must always be greater than the value of the application factor k calculated for the application.

Required: c ≥ k

Application factor k (according to DIN 3990)
Takes into account the influence of temporally variable loads which are actually present during the anticipated operating time of gearboxes and geared motors.
k is determined by:
- the type of load
- the load intensity
- temporal influences

Application factor k

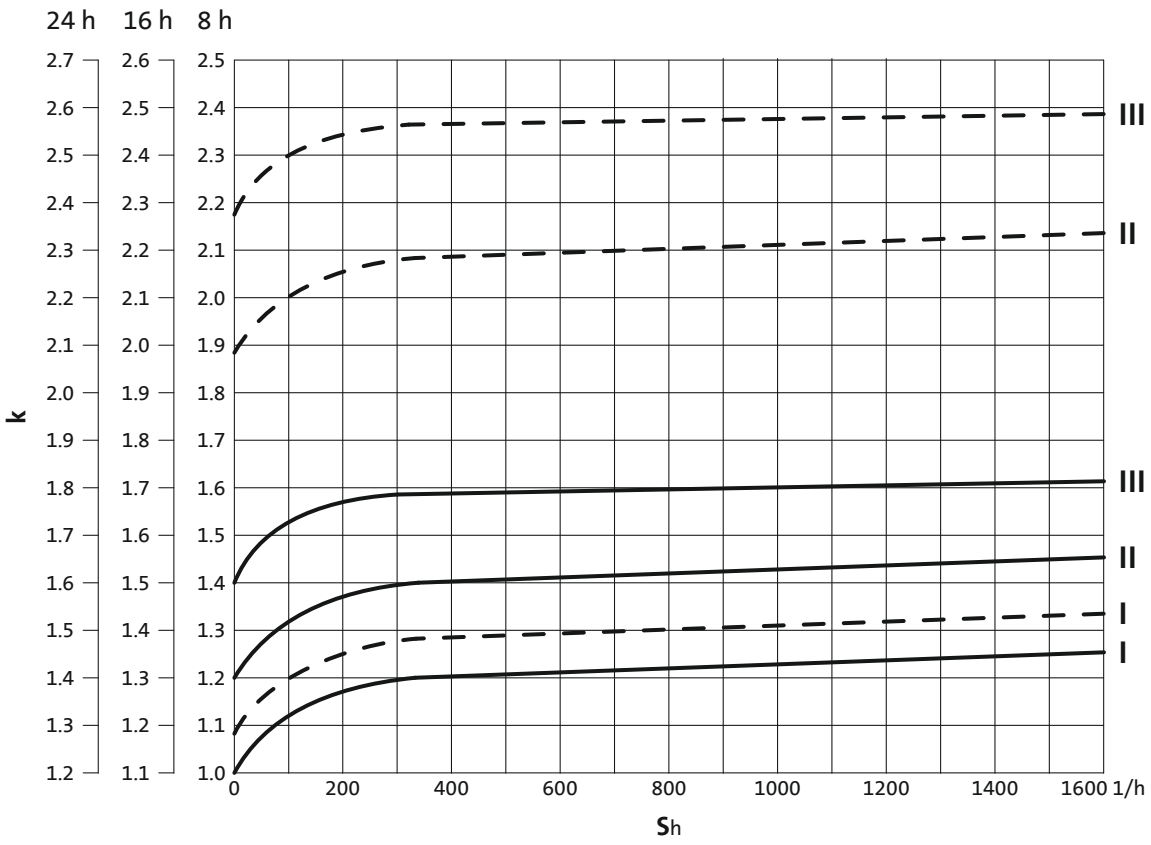

► S_h= switchings/h
► ——— Three-phase AC motors MD□MA
— — — Three-phase AC motors m240/m540/m550

Operational performance of three-phase AC geared motors

The g500 geared motors can be actuated directly on the mains or via an inverter. When actuated in mains operation, the motor runs at a fixed speed, for inverter operation the speed is variable. Thanks to their high degree of protection, the robust three-phase drives can be basically used in a variety of applications.

Mains operation

During mains operation, when switched on, the three-phase AC motor starts up according to the speed-torque characteristic. It passes through this characteristic until it reaches its stable operating point. This operating point has been reached if the load torque or rated torque (M_{rated}) is lower than the starting torque (M_A) and pull-up torque (M_S). The rated speed (n_{rated}) of the drive is always lower than the calculated synchronous speed (n_S). The difference between rated speed and synchronous speed relating to the synchronous speed is referred to as the "slip".

Speed-torque characteristic

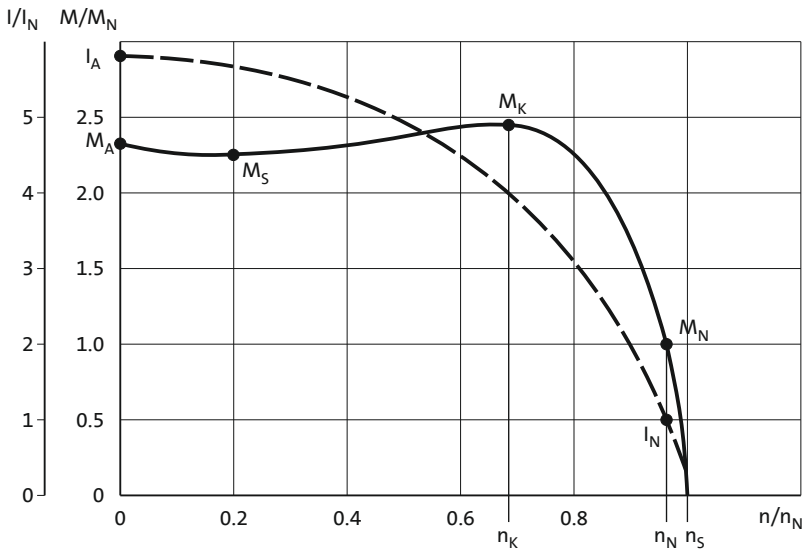

Operational performance of three-phase AC geared motors

Operation on the inverter

An inverter enables energy-efficient operation of a system in virtually all application cases. The various operating modes, which can be created by making just a few simple settings, facilitate this. The following characteristics and corresponding specifications listed on the following pages can be used to calculate the optimum operating mode during the project planning phase.

Standard setting

In its initial state when delivered, the inverter is set up for basic operation with a three-phase AC motor with vector control. When operated in this mode, the rated torque of the motor is available in a setting range up to 50 Hz.

V/f at 50 Hz

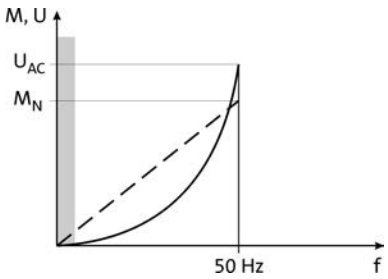

Extended setting range up to 87 Hz

If the V/f reference point on the inverter is set to 87 Hz, the rated torque can be used across an extended setting range. Here, a 230/400V motor is for example used and operated in a delta layout with a 400V inverter. The setting range is then increased by 40 %. The inverter must be dimensioned for a rated motor current of 230 V.

V/f at 87 Hz

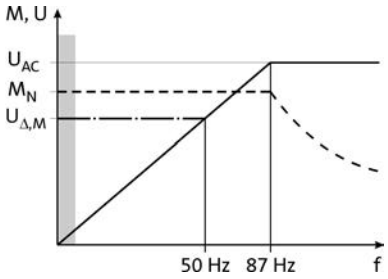

Operational performance of three-phase AC geared motors

Torque derating at low motor frequencies

The diagram shows the motor frame size-dependent torque reduction for self-ventilated motors, taking the thermal behaviour during actuation of the inverter into consideration.

Torque characteristics

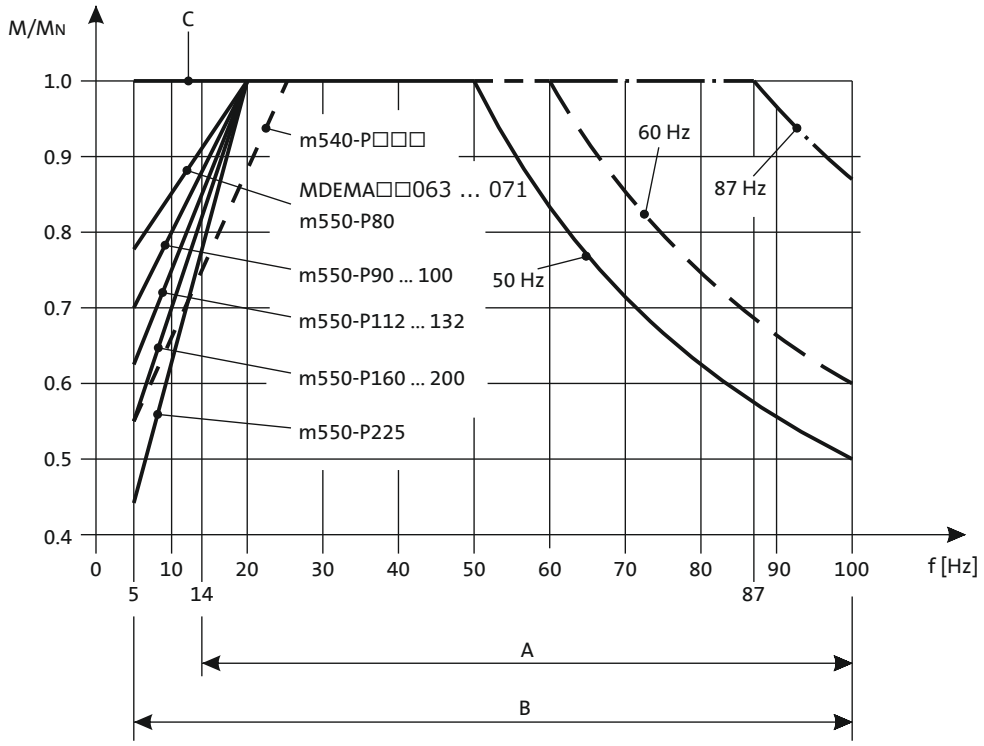

A = Operation with integral fan and brake
B = Operation with integral fan and brake control "Holding current reduction"
C= operation with blower

Technical data at a glance

The following tables contain the most important data of the gearbox with the motors that can be attached for an approximate dimensioning process of a geared motor. Detailed information can be found in the following chapters.

The data given in the tables apply to
- input speed n_1= 1400 r/min
- application factor c= 1.0

The data for the max. radial force refer to
- solid shaft without flange
- normal storage
- application factor c= 1.3

For further designs see the "Technical data" chapter.

► The rated torque can be gathered from the last digits of the product name e.g. g500-B45 (45 Nm).

In order to calculate the exact ratio, the number of teeth z_g (driven) can be divided by the number of teeth z_t (driving). These are rounded values.

g500-B45, 2-stage gearboxes

Output speed	Max. output torque	Max. drive power	Ratio	Number of teeth		Max. radial force	Backlash	Rated power	
							Standard	Motor	
n_2	$M_{2, max}$	$P_{1, max}$	i	z_g	z_t	$F_{rad,max}$		$P_{N, min}$	$P_{N, max}$
							± 20 %		
[r/min]	[Nm]	[kW]				[N]	[arcmin]	[kW]	[kW]
260	39	1.12	5.411	207	1120	2080	27	0.18	0.55
226	41	1.01	6.222	9	56	2180	26	0.18	0.55
198	43	0.94	7.111	9	64	2280	26	0.18	0.55
172	44	0.83	8.178	45	368	2360	25	0.18	0.55
154	45	0.77	9.101	189	1720	2440	25	0.18	0.55
134	45	0.67	10.466	189	1978	2580	24	0.12	0.55
121	45	0.60	11.640	189	2200	2660	24	0.12	0.55
105	45	0.52	13.386	189	2530	2770	23	0.09	0.55
93.0	45	0.46	15.111	9	136	2840	24	0.09	0.55
81.0	45	0.40	17.378	45	782	2900	23	0.09	0.37
73.0	45	0.36	19.365	63	1220	2950	24	0.09	0.37
63.0	45	0.31	22.270	63	1403	3000	23	0.06	0.37
55.0	45	0.27	25.051	99	2480	3000	23	0.06	0.25
48.0	45	0.24	28.808	99	2852	3000	22	0.06	0.25
42.0	45	0.21	32.593	27	880	3000	23	0.06	0.25
36.0	45	0.18	37.481	27	1012	3000	23	0.06	0.18
32.0	45	0.16	42.222	9	380	3000	23	0.06	0.18
29.0	45	0.15	48.556	9	437	3000	22	0.06	0.12
26.0	45	0.13	53.889	9	485	3000	23	0.06	0.12
23.0	45	0.11	61.972	36	2231	3000	22	0.06	0.12

Technical data at a glance

g500-B110, 2-stage gearboxes

Output speed	Max. output torque	Max. drive power	Ratio	Number of teeth		Max. radial force	Backlash	Rated power	
							Standard	Motor	
n_2	$M_{2, max}$	$P_{1, max}$	i	z_g	z_t	$F_{rad,max}$		$P_{N, min}$	$P_{N, max}$
							± 20 %		
[r/min]	[Nm]	[kW]				[N]	[arcmin]	[kW]	[kW]
278	69	2.12	5.185	27	140	2450	21	0.25	1.50
242	72	1.92	5.963	27	161	2530	21	0.25	1.50
203	77	1.72	7.111	9	64	2620	20	0.25	1.50
176	81	1.57	8.178	45	368	2670	20	0.25	1.50
158	84	1.47	9.101	189	1720	2730	20	0.25	1.50
138	89	1.35	10.466	189	1978	2830	20	0.25	1.50
126	90	1.25	11.449	225	2576	2890	20	0.18	1.50
114	90	1.13	12.698	63	800	2950	20	0.18	1.10
99.0	90	0.98	14.603	63	920	3000	20	0.18	1.10
93.0	92	0.94	15.556	9	140	3000	20	0.25	1.10
81.0	96	0.86	17.889	9	161	3000	20	0.25	0.75
74.0	100	0.82	19.556	9	176	3000	20	0.12	0.75
64.0	104	0.74	22.489	45	1012	3000	19	0.12	0.75
58.0	108	0.69	25.185	27	680	3000	20	0.12	0.75
50.0	110	0.61	28.963	27	782	3000	19	0.12	0.75
44.0	108	0.53	31.919	99	3160	3000	19	0.12	0.37
38.0	110	0.47	36.707	99	3634	3000	19	0.12	0.37
38.0	106	0.44	37.400	5	187	3000	19	0.12	0.37
35.0	100	0.39	40.000	1	40	3000	19	0.12	0.37
31.0	110	0.37	46.000	1	46	3000	19	0.12	0.37
29.0	110	0.36	48.167	6	289	3000	18	0.12	0.37
26.0	69	0.20	52.698	63	3320	3000	19	0.12	0.18
22.0	79	0.20	60.603	63	3818	3000	18	0.12	0.18
22.0	110	0.27	61.045	22	1343	3000	18	0.12	0.25
18.0	110	0.22	76.500	2	153	3000	18	0.12	0.25
14.0	110	0.16	100.786	14	1411	3000	18	0.12	0.18

Technical data at a glance

g500-B240, 2-stage gearboxes

Output speed	Max. output torque	Max. drive power	Ratio	Number of teeth		Max. radial force	Backlash	Rated power	
							Standard	Motor	
n_2	$M_{2, max}$	$P_{1, max}$	i	z_g	z_t	$F_{rad,max}$		$P_{N, min}$	$P_{N, max}$
							± 20 %		
[r/min]	[Nm]	[kW]				[N]	[arcmin]	[kW]	[kW]
406	138	6.18	3.565	108	385	3030	17	0.55	3.00
296	147	4.80	4.889	9	44	3450	17	1.10	3.00
232	156	3.98	6.257	378	2365	3860	17	0.55	3.00
210	179	4.15	6.883	60	413	4070	13	0.55	3.00
185	187	3.82	7.817	60	469	4300	13	0.55	3.00
154	191	3.23	9.440	25	236	4600	13	1.10	3.00
135	204	3.04	10.720	25	268	4740	13	1.10	3.00
120	208	2.75	12.081	210	2537	4860	13	0.55	3.00
106	217	2.53	13.719	210	2881	4980	13	0.55	3.00
97.0	223	2.38	15.008	125	1876	5180	13	0.25	2.20
86.0	240	2.28	16.857	7	118	5440	13	0.25	2.20
76.0	240	2.01	19.143	7	134	5710	12	0.25	2.20
70.0	240	1.86	20.650	20	413	5860	13	0.55	2.20
62.0	240	1.63	23.450	20	469	6070	12	0.55	1.50
54.0	240	1.42	26.878	90	2419	6230	13	0.25	1.50
47.0	240	1.25	30.522	90	2747	6370	12	0.25	1.50
43.0	240	1.14	33.433	30	1003	6500	13	0.25	1.10
38.0	240	1.01	37.967	30	1139	6500	12	0.25	1.10
34.0	240	0.89	43.267	15	649	6500	12	0.12	0.75
30.0	240	0.78	49.133	15	737	6500	12	0.12	0.75
27.0	233	0.69	52.510	100	5251	6500	12	0.12	0.55
24.0	240	0.62	59.630	100	5963	6500	12	0.12	0.55
21.0	178	0.41	67.113	80	5369	6500	12	0.12	0.37
18.0	202	0.41	76.213	80	6097	6500	12	0.12	0.37

Technical data at a glance

g500-B240, 3-stage gearboxes

Output speed	Max. output torque	Max. drive power	Ratio	Number of teeth		Max. radial force	Backlash	Rated power	
							Standard	Motor	
n_2	$M_{2, max}$	$P_{1, max}$	i	z_g	z_t	$F_{rad,max}$		$P_{N, min}$	$P_{N, max}$
							± 20 %		
[r/min]	[Nm]	[kW]				[N]	[arcmin]	[kW]	[kW]
20.0	240	0.56	68.459	630	43129	6500	13	0.12	0.55
18.0	240	0.49	77.741	630	48977	6500	13	0.12	0.55
16.0	240	0.44	87.563	126	11033	6500	13	0.12	0.37
14.0	240	0.39	99.437	126	12529	6500	13	0.12	0.37
12.0	240	0.34	113.673	150	17051	6500	13	0.12	0.37
11.0	240	0.30	129.087	150	19363	6500	13	0.12	0.37
9.00	240	0.26	145.674	420	61183	6500	13	0.12	0.25
8.00	240	0.23	165.426	420	69479	6500	13	0.12	0.25
7.00	240	0.20	188.442	165	31093	6500	13	0.12	0.18
6.00	240	0.17	213.994	165	35309	6500	13	0.12	0.18
6.00	240	0.15	245.178	45	11033	6500	13	0.12	0.18
5.00	240	0.14	278.422	45	12529	6500	13	0.12	0.12
4.00	240	0.12	317.617	60	19057	6500	13	0.12	0.12
4.00	240	0.11	360.683	60	21641	6500	13	0.12	0.12

Technical data at a glance

g500-B450, 3-stage gearboxes

Output speed	Max. output torque	Max. drive power	Ratio	Number of teeth		Max. radial force	Backlash	Rated power	
							Standard	Motor	
n_2	$M_{2, max}$	$P_{1, max}$	i	z_g	z_t	$F_{rad,max}$		$P_{N, min}$	$P_{N, max}$
							± 20 %		
[r/min]	[Nm]	[kW]				[N]	[arcmin]	[kW]	[kW]
295	280	9.12	5.002	480	2401	3760	21	0.55	7.50
215	308	7.31	6.860	50	343	4030	21	1.10	7.50
159	368	6.43	9.315	384	3577	4370	15	0.55	7.50
143	384	6.05	10.328	204	2107	4500	14	0.55	7.50
114	404	5.09	12.775	40	511	4830	15	1.10	5.50
103	422	4.80	14.165	85	1204	5010	14	1.10	5.50
89.0	434	4.25	16.349	192	3139	5280	15	0.55	4.00
81.0	446	3.99	17.885	200	3577	5470	15	0.25	4.00
73.0	450	3.64	19.831	425	8428	5710	14	0.25	4.00
64.0	450	3.15	22.813	16	365	6060	15	0.25	3.00
57.0	450	2.84	25.294	17	430	6340	14	0.25	3.00
52.0	450	2.57	27.945	128	3577	6640	15	0.55	3.00
47.0	450	2.33	30.985	68	2107	6960	14	0.55	2.20
40.0	450	1.96	36.373	576	20951	7520	14	0.25	1.50
36.0	450	1.78	40.330	306	12341	7800	14	0.25	1.50
32.0	450	1.58	45.245	192	8687	7800	14	0.25	1.50
29.0	450	1.42	50.167	6	301	7800	14	0.25	1.50
26.0	450	1.28	56.154	13	730	7800	13	0.25	1.50
23.0	450	1.15	62.262	221	13760	7800	12	0.25	1.10
21.0	450	1.04	68.788	52	3577	7800	13	0.55	1.10
19.0	450	0.94	76.271	221	16856	7800	12	0.55	1.10
16.0	450	0.80	89.534	234	20951	7800	13	0.25	0.75
15.0	450	0.72	99.274	1989	197456	7800	12	0.25	0.75
13.0	450	0.64	111.372	78	8687	7800	13	0.25	0.75
11.0	450	0.57	123.487	39	4816	7800	12	0.25	0.55
10.0	450	0.48	144.128	39	5621	7800	13	0.12	0.55
9.00	450	0.44	159.807	663	105952	7800	12	0.12	0.37
8.00	450	0.40	174.919	260	45479	7800	13	0.12	0.37
7.00	450	0.36	193.948	1105	214312	7800	12	0.12	0.37
6.00	450	0.31	223.563	16	3577	7800	13	0.12	0.37
6.00	450	0.27	247.882	17	4214	7800	12	0.12	0.25

Technical data at a glance

g500-B600, 3-stage gearboxes

Output speed	Max. output torque	Max. drive power	Ratio	Number of teeth		Max. radial force	Backlash	Rated power	
							Standard	Motor	
n_2	$M_{2, max}$	$P_{1, max}$	i	z_g	z_t	$F_{rad,max}$		$P_{N, min}$	$P_{N, max}$
							± 20 %		
[r/min]	[Nm]	[kW]				[N]	[arcmin]	[kW]	[kW]
292	376	12.1	5.067	1242	6293	4600	21	2.20	7.50
213	398	9.33	6.949	1035	7192	5000	19	2.20	7.50
194	462	9.88	7.617	2052	15631	5100	17	2.20	7.50
138	542	8.21	10.741	27	290	5600	15	2.20	7.50
110	553	6.73	13.369	1026	13717	6500	17	1.10	7.50
100	600	6.63	14.730	63	928	6900	14	2.20	7.50
77.0	600	5.12	18.851	1323	24940	7500	14	1.10	5.50
71.0	600	4.68	20.622	45	928	7800	14	1.10	5.50
64.0	600	4.21	22.852	684	15631	8100	16	1.10	4.00
57.0	600	3.79	25.347	95	2408	8300	14	2.20	4.00
56.0	600	3.69	26.061	33	860	8400	13	2.20	4.00
49.0	600	3.23	29.744	3078	91553	8700	16	0.55	4.00
45.0	600	2.96	32.439	57	1849	8900	14	1.10	3.00
40.0	600	2.68	35.740	77	2752	9000	13	2.20	3.00
39.0	600	2.59	36.999	1026	37961	9000	16	0.55	3.00
35.0	600	2.29	41.940	567	23780	9000	14	0.55	2.20
32.0	600	2.10	45.739	1617	73960	9000	13	1.10	2.20
29.0	600	1.92	50.036	55	2752	9000	13	1.10	2.20
26.0	600	1.72	55.447	38	2107	9000	14	1.10	1.50
23.0	600	1.49	63.822	539	34400	9000	13	0.55	1.50
21.0	600	1.42	67.513	189	12760	9000	14	0.25	1.50
20.0	600	1.32	72.170	171	12341	9000	14	0.55	1.50
18.0	600	1.22	78.182	11	860	9000	13	1.10	1.50
18.0	600	1.16	81.937	63	5162	9000	14	0.25	1.10
16.0	600	1.06	89.772	57	5117	9000	14	0.55	1.10
14.0	600	0.94	101.760	693	70520	9000	13	0.55	1.10
12.0	600	0.83	116.175	57	6622	9000	14	0.25	0.75
12.0	600	0.76	126.580	231	29240	9000	12	0.55	0.75
10.0	600	0.68	140.995	190	26789	9000	14	0.25	0.75
9.00	600	0.57	163.810	21	3440	9000	12	0.25	0.55
8.00	600	0.52	178.224	76	13545	9000	14	0.25	0.55
7.00	600	0.47	198.805	77	15308	9000	12	0.25	0.55
6.00	600	0.37	251.299	77	19350	9000	12	0.25	0.37

Technical data at a glance

g500-B820, 3-stage gearboxes

Output speed	Max. output torque	Max. drive power	Ratio	Number of teeth		Max. radial force	Backlash	Rated power	
							Standard	Motor	
n_2	$M_{2, max}$	$P_{1, max}$	i	z_g	z_t	$F_{rad,max}$		$P_{N, min}$	$P_{N, max}$
							± 20 %		
[r/min]	[Nm]	[kW]				[N]	[arcmin]	[kW]	[kW]
298	312	10.2	4.958	24	119	9800	21	2.20	7.50
217	391	9.37	6.800	5	34	10200	20	2.20	7.50
194	424	9.07	7.618	34	259	10700	17	2.20	7.50
173	459	8.78	8.517	60	511	11000	16	2.20	7.50
155	496	8.48	9.520	25	238	11000	20	1.10	7.50
141	528	8.24	10.447	85	888	11000	16	2.20	7.50
126	569	7.93	11.680	25	292	11000	15	2.20	7.50
122	544	7.30	12.143	7	85	11000	19	0.55	7.50
110	619	7.54	13.370	119	1591	11000	16	1.10	7.50
101	653	7.27	14.626	425	6216	11000	16	1.10	7.50
90.0	708	7.05	16.352	125	2044	11000	16	1.10	7.50
79.0	747	6.52	18.655	119	2220	11000	16	0.55	7.50
71.0	820	6.40	20.857	7	146	11000	16	0.55	7.50
64.0	820	5.78	22.853	34	777	11000	15	1.10	5.50
57.0	820	5.16	25.550	20	511	11000	15	1.10	5.50
56.0	820	5.02	26.324	330	8687	11000	12	2.20	5.50
49.0	820	4.41	29.745	51	1517	11000	15	0.55	4.00
45.0	820	4.07	32.291	55	1776	11000	13	2.20	4.00
40.0	820	3.63	36.102	275	9928	11000	14	2.20	4.00
39.0	820	3.54	37.000	1	37	11000	12	0.55	3.00
35.0	820	3.17	41.325	77	3182	11000	13	1.10	3.00
32.0	820	2.90	45.207	275	12432	11000	13	1.10	3.00
29.0	820	2.59	50.543	1375	69496	11000	12	1.10	3.00
25.0	820	2.28	57.662	77	4440	11000	13	0.55	2.20
22.0	820	2.03	64.468	77	4964	11000	12	0.55	2.20
21.0	820	1.86	70.636	11	777	11000	13	1.10	2.20
18.0	820	1.65	78.973	110	8687	11000	12	1.10	1.50
16.0	820	1.42	91.939	33	3034	11000	13	0.55	1.50
14.0	820	1.27	102.790	495	50881	11000	12	0.55	1.50
13.0	820	1.14	114.364	11	1258	11000	13	0.55	1.10
11.0	820	1.02	127.861	165	21097	11000	12	0.55	1.10
10.0	820	0.89	148.000	1	148	11000	13	0.25	1.10
9.00	820	0.80	165.467	15	2482	11000	12	0.25	0.75
8.00	820	0.73	179.618	55	9879	11000	13	0.25	0.75
7.00	820	0.65	200.816	550	110449	11000	12	0.25	0.75
6.00	820	0.56	227.045	22	4995	11000	12	0.25	0.55
6.00	820	0.50	253.841	44	11169	11000	12	0.25	0.55

Technical data at a glance

g500-B1500, 3-stage gearboxes

Output speed	Max. output torque	Max. drive power	Ratio	Number of teeth		Max. radial force	Backlash	Rated power	
							Standard	Motor	
n_2	$M_{2, max}$	$P_{1, max}$	i	z_g	z_t	$F_{rad,max}$		$P_{N, min}$	$P_{N, max}$
							± 20 %		
[r/min]	[Nm]	[kW]				[N]	[arcmin]	[kW]	[kW]
216	837	19.9	6.866	261	1792	12000	16	4.00	22.00
156	1006	17.3	9.516	153	1456	13000	15	4.00	18.50
136	1330	19.9	10.902	3393	36992	14000	12	4.00	22.00
124	1461	19.9	11.985	261	3128	15000	12	4.00	22.00
112	1118	13.8	13.118	3825	50176	15500	15	2.20	15.00
98.0	1500	16.2	15.111	9	136	16000	12	4.00	18.50
88.0	1500	14.6	16.611	18	299	16000	11	4.00	15.00
79.0	1500	13.1	18.598	117	2176	16000	12	2.20	15.00
72.0	1500	12.0	20.444	9	184	16000	11	2.20	11.00
64.0	1500	10.7	22.898	225	5152	16000	11	2.20	11.00
62.0	1500	10.2	23.973	4147	99416	16000	11	4.00	11.00
56.0	1500	9.28	26.353	638	16813	16000	10	4.00	11.00
51.0	1500	8.37	29.206	63	1840	16000	11	1.10	7.50
45.0	1500	7.51	32.547	117	3808	16000	11	2.20	7.50
41.0	1500	6.83	35.778	9	322	16000	11	2.20	7.50
40.0	1500	6.68	36.526	352	12857	16000	10	4.00	7.50
36.0	1500	5.90	40.895	143	5848	16000	11	2.20	5.50
32.0	1500	5.37	44.955	22	989	16000	10	2.20	5.50
31.0	1500	5.19	46.568	81	3772	16000	11	1.10	5.50
28.0	1500	4.63	51.920	351	18224	16000	11	1.10	4.00
26.0	1500	4.22	57.074	27	1541	16000	11	1.10	4.00
25.0	1500	4.12	58.422	1001	58480	16000	10	1.10	4.00
23.0	1500	3.74	64.221	77	4945	16000	10	1.10	4.00
20.0	1500	3.36	71.566	143	10234	16000	10	2.20	4.00
19.0	1500	3.19	74.963	27	2024	16000	11	0.55	3.00
18.0	1500	2.89	82.762	585	48416	16000	11	0.55	2.20
16.0	1500	2.65	90.978	45	4094	16000	11	0.55	2.20
16.0	1500	2.58	93.150	1287	119884	16000	10	1.10	3.00
14.0	1500	2.35	102.396	396	40549	16000	10	1.10	2.20
13.0	1500	2.10	114.166	429	48977	16000	10	1.10	2.20
12.0	1500	1.92	125.498	528	66263	16000	10	1.10	2.20
10.0	1500	1.59	149.949	39	5848	16000	10	0.55	1.50
9.00	1500	1.44	164.833	6	989	16000	10	0.55	1.50
8.00	1500	1.31	181.983	715	130118	16000	10	0.55	1.50
7.00	1500	1.19	200.048	440	88021	16000	10	0.55	1.10
6.00	1500	1.04	230.035	143	32895	16000	10	0.55	1.10
6.00	1500	0.94	252.869	176	44505	16000	10	0.55	1.10

Technical data at a glance

g500-B2700, 3-stage gearboxes

Output speed	Max. output torque	Max. drive power	Ratio	Number of teeth		Max. radial force	Backlash	Rated power	
							Standard	Motor	
n_2	$M_{2, max}$	$P_{1, max}$	i	z_g	z_t	$F_{rad,max}$		$P_{N, min}$	$P_{N, max}$
							± 20 %		
[r/min]	[Nm]	[kW]				[N]	[arcmin]	[kW]	[kW]
214	1446	34.0	6.918	4180	28917	13000	15	7.50	30.00
168	1528	28.3	8.793	4750	41769	14000	14	5.50	30.00
126	2212	30.8	11.713	209	2448	16000	10	5.50	30.00
115	2262	28.6	12.863	1463	18819	16500	10	5.50	30.00
99.0	2380	26.1	14.888	475	7072	17000	10	5.50	30.00
90.0	2429	24.2	16.351	3325	54366	18000	9	5.50	30.00
76.0	2579	21.5	19.542	1197	23392	19000	10	4.00	22.00
66.0	2684	19.7	22.269	171	3808	20100	10	4.00	22.00
60.0	2700	18.0	24.456	57	1394	20500	9	4.00	22.00
55.0	2700	16.5	26.814	1197	32096	21000	10	2.20	18.50
50.0	2700	15.0	29.447	2793	82246	21500	9	2.20	18.50
45.0	2700	13.3	32.873	513	16864	22000	10	4.00	15.00
41.0	2700	12.1	36.102	1197	43214	22700	9	4.00	15.00
35.0	2700	10.3	42.772	189	8084	23000	9	4.00	11.00
32.0	2700	9.38	46.973	1764	82861	24000	8	4.00	11.00
30.0	2700	8.99	48.912	57	2788	25000	9	2.20	7.50
27.0	2700	8.13	54.082	171	9248	26000	10	2.20	7.50
25.0	2700	7.41	59.393	399	23698	27500	9	2.20	7.50
23.0	2700	6.82	64.452	1764	113693	27500	8	2.20	7.50
20.0	2700	6.10	71.951	81	5828	27500	9	4.00	7.50
19.0	2700	5.63	76.862	399	30668	27500	9	1.10	4.00
17.0	2700	5.09	84.940	285	24208	27500	10	1.10	4.00
16.0	2700	4.64	93.283	665	62033	27500	9	1.10	4.00
15.0	2700	4.47	97.481	27	2632	27500	9	2.20	5.50
14.0	2700	4.05	107.056	18	1927	27500	8	2.20	4.00
12.0	2700	3.66	118.370	27	3196	27500	9	2.20	4.00
11.0	2700	3.33	129.996	252	32759	27500	8	2.20	4.00
10.0	2700	2.83	153.185	27	4136	27500	9	1.10	3.00
9.00	2700	2.56	168.230	126	21197	27500	8	1.10	3.00
8.00	2700	2.32	185.911	45	8366	27500	9	1.10	2.20
7.00	2700	2.11	204.170	840	171503	27500	8	1.10	2.20
6.00	2700	1.85	235.000	1	235	27500	9	1.10	2.20
6.00	2700	1.67	258.080	112	28905	27500	8	1.10	1.50

Technical data at a glance

g500-B4300, 3-stage gearboxes

Output speed	Max. output torque	Max. drive power	Ratio	Number of teeth		Max. radial force	Backlash	Rated power	
							Standard	Motor	
n_2	$M_{2, max}$	$P_{1, max}$	i	z_g	z_t	$F_{rad,max}$		$P_{N, min}$	$P_{N, max}$
							± 20 %		
[r/min]	[Nm]	[kW]				[N]	[arcmin]	[kW]	[kW]
269	2160	64.1	5.488	209	1147	13200	14	7.50	30.00
212	2400	56.1	6.976	4275	29822	14000	14	7.50	30.00
161	2700	48.0	9.156	10773	98642	15100	14	4.00	30.00
146	3950	63.5	10.137	6688	67797	15500	9	7.50	30.00
133	4250	62.5	11.080	2090	23157	16000	9	7.50	30.00
115	4300	54.4	12.885	7600	97929	16800	9	7.50	30.00
105	4300	49.7	14.084	2375	33449	17300	9	7.50	30.00
87.0	4300	41.4	16.913	2128	35991	18600	9	4.00	30.00
80.0	4300	37.9	18.486	5985	110639	19300	9	4.00	30.00
70.0	4300	33.3	21.065	855	18011	20400	9	4.00	30.00
64.0	4300	30.3	23.206	2128	49383	21200	9	2.20	22.00
58.0	4300	27.6	25.365	5985	151807	22100	9	2.20	22.00
53.0	4300	25.0	28.013	80	2241	23100	8	5.50	30.00
48.0	4300	22.6	31.097	2565	79763	24300	9	4.00	22.00
42.0	4300	19.7	35.607	1000	35607	25900	8	5.50	22.00
38.0	4300	18.2	38.546	152	5859	26900	9	2.20	7.50
35.0	4300	16.4	42.760	896	38313	28300	8	4.00	18.50
32.0	4300	15.0	46.737	840	39259	29500	8	4.00	18.50
28.0	4300	13.1	53.258	120	6391	31500	8	4.00	15.00
25.0	4300	11.9	58.671	896	52569	33000	8	2.20	11.00
23.0	4300	10.9	64.127	840	53867	34400	8	2.20	11.00
20.0	4300	9.72	71.930	128	9207	36400	8	4.00	11.00
19.0	4300	8.91	78.619	360	28303	37900	8	4.00	11.00
15.0	4300	7.21	97.453	64	6237	40000	8	2.20	7.50
14.0	4300	6.59	106.517	60	6391	40000	8	2.20	7.50
12.0	4300	5.83	118.336	128	15147	40000	8	2.20	5.50
11.0	4300	5.36	129.342	120	15521	40000	8	2.20	5.50
10.0	4300	4.50	153.141	64	9801	40000	8	1.10	4.00
9.00	4300	4.12	167.383	60	10043	40000	8	1.10	4.00
8.00	4300	3.70	185.857	1280	237897	40000	8	1.10	4.00
7.00	4300	3.41	203.143	400	81257	40000	8	1.10	4.00
6.00	4300	2.94	234.932	512	120285	40000	8	1.10	2.20
6.00	4300	2.70	256.781	32	8217	40000	8	1.10	2.20

Technical data at a glance

g500-B8000, 3-stage gearboxes

Output speed	Max. output torque	Max. drive power	Ratio	Number of teeth		Max. radial force	Backlash	Rated power	
							Standard	Motor	
n_2	$M_{2, max}$	$P_{1, max}$	i	z_g	z_t	$F_{rad,max}$		$P_{N, min}$	$P_{N, max}$
							± 20 %		
[r/min]	[Nm]	[kW]				[N]	[arcmin]	[kW]	[kW]
217	3630	86.4	6.820	13125	89528	32000	11	15.00	55.00
184	3720	75.1	8.040	6825	54872	33000	11	15.00	55.00
151	3850	63.7	9.810	12075	118408	35000	11	11.00	55.00
132	3950	56.9	11.260	11025	124184	35400	11	11.00	55.00
119	4030	52.6	12.440	12075	150176	35800	11	11.00	55.00
105	4140	47.5	14.150	1225	17328	36500	10	11.00	55.00
103	6660	75.2	14.380	728	10469	37000	9	15.00	55.00
84.0	6890	63.8	17.540	1288	22591	39000	9	11.00	55.00
74.0	7070	56.9	20.150	1176	23693	41000	9	11.00	55.00
67.0	7210	52.6	22.250	322	7163	42000	9	11.00	55.00
59.0	7420	47.6	25.300	196	4959	44000	9	11.00	55.00
52.0	7630	43.1	28.660	1288	36917	46000	9	7.50	45.00
46.0	7760	38.9	32.330	392	12673	48000	9	7.50	45.00
42.0	7850	35.9	35.400	2288	80997	50000	8	7.50	37.00
34.0	8000	30.0	43.180	4048	174783	52000	8	5.50	37.00
30.0	8000	25.9	49.600	176	8729	57000	8	5.50	30.00
27.0	8000	23.5	54.760	1012	55419	59000	8	4.00	22.00
24.0	8000	20.7	62.280	88	5481	60000	8	4.00	22.00
21.0	8000	18.2	70.560	4048	285621	62000	8	4.00	22.00
18.0	8000	16.2	79.590	176	14007	64000	8	3.00	18.50
17.0	8000	14.6	88.810	16	1421	65000	8	3.00	15.00
15.0	8000	13.0	99.790	4400	439089	65000	8	2.20	15.00
13.0	8000	11.5	112.680	4048	456141	65000	8	2.20	11.00
12.0	8000	10.2	127.160	704	89523	65000	8	2.20	11.00
10.0	8000	9.20	140.930	121	17052	65000	8	1.50	11.00
9.00	8000	8.06	158.650	3520	558453	65000	8	1.50	7.50
8.00	8000	7.19	178.970	1056	188993	65000	8	1.50	7.50
8.00	8000	6.75	190.920	1496	285621	65000	8	1.50	7.50
7.00	8000	6.31	202.860	1408	285621	65000	8	1.50	7.50
6.00	8000	5.43	237.030	352	83433	65000	8	1.50	5.50

Technical data at a glance

g500-B13000, 3-stage gearboxes

Output speed	Max. output torque	Max. drive power	Ratio	Number of teeth		Max. radial force	Backlash	Rated power	
							Standard	Motor	
n_2	$M_{2, max}$	$P_{1, max}$	i	z_g	z_t	$F_{rad,max}$		$P_{N, min}$	$P_{N, max}$
							± 20 %		
[r/min]	[Nm]	[kW]				[N]	[arcmin]	[kW]	[kW]
216	6130	145	6.860	4959	34034	42000	11	30.00	55.00
169	6360	118	8.780	12825	112574	45000	11	22.00	55.00
148	6530	106	10.010	2223	22253	45000	10	18.50	55.00
122	6760	90.0	12.200	11799	143990	45000	10	15.00	55.00
111	11900	144	13.390	4408	59007	45000	8	30.00	55.00
87.0	12400	118	17.120	3800	65059	48000	7	22.00	55.00
76.0	12700	106	19.530	3952	77163	52000	7	18.50	55.00
62.0	13000	88.7	23.800	3496	83215	57000	7	15.00	55.00
55.0	13000	78.0	27.020	56	1513	59000	7	15.00	55.00
50.0	13000	71.8	29.430	874	25721	60000	7	15.00	55.00
48.0	13000	68.6	30.750	1392	42809	61000	7	15.00	55.00
38.0	13000	53.7	39.330	3600	141599	65000	7	11.00	55.00
33.0	13000	47.0	44.860	1248	55981	67000	7	11.00	55.00
27.0	13000	38.5	54.680	3312	181115	70000	7	7.50	45.00
24.0	13000	33.9	62.070	1008	62567	70000	7	7.50	37.00
22.0	13000	31.2	67.610	828	55981	70000	7	5.50	37.00
19.0	13000	27.5	76.230	216	16465	70000	7	5.50	30.00
17.0	13000	24.5	85.510	1656	141599	70000	7	5.50	30.00
15.0	13000	21.8	95.830	378	36223	70000	7	4.00	22.00
14.0	13000	19.6	106.720	216	23051	70000	7	4.00	22.00
12.0	13000	17.5	119.830	3600	431383	70000	7	3.00	18.50
11.0	13000	15.9	132.240	3312	437969	70000	7	3.00	15.00
10.0	13000	14.0	150.550	1728	260147	70000	7	3.00	15.00
9.00	13000	12.7	166.310	99	16465	70000	7	2.20	15.00
8.00	13000	11.4	185.230	160	29637	70000	7	2.20	11.00
7.00	13000	10.1	208.350	648	135013	70000	7	2.20	11.00
7.00	13000	9.40	223.300	1224	273319	70000	7	2.20	11.00

Technical data at a glance

g500-B20000, 3-stage gearboxes

Output speed	Max. output torque	Max. drive power	Ratio	Number of teeth		Max. radial force	Backlash	Rated power	
							Standard	Motor	
n_2	$M_{2, max}$	$P_{1, max}$	i	z_g	z_t	$F_{rad,max}$		$P_{N, min}$	$P_{N, max}$
							± 20 %		
[r/min]	[Nm]	[kW]				[N]	[arcmin]	[kW]	[kW]
125	19500	266	11.890	551	6552	52000	7	45.00	55.00
99.0	19500	212	14.940	551	8232	56000	7	37.00	55.00
79.0	19500	169	18.750	475	8904	59000	7	30.00	55.00
70.0	19500	150	21.090	247	5208	61000	7	30.00	55.00
58.0	19500	125	25.370	437	11088	66000	7	22.00	55.00
52.0	19500	112	28.390	5423	153972	69000	6	18.50	55.00
42.0	19500	88.6	35.670	5423	193452	76000	6	15.00	55.00
33.0	19500	70.7	44.760	4675	209244	84000	6	15.00	55.00
29.0	19500	62.8	50.340	2431	122388	94000	6	11.00	55.00
24.0	19500	52.3	60.580	391	23688	98000	6	11.00	55.00
22.0	19500	47.0	67.360	187	12596	100000	6	11.00	55.00
20.0	19500	42.5	74.350	4301	319788	102000	6	7.50	45.00
18.0	19500	37.8	83.440	187	15604	104000	6	7.50	45.00
16.0	19500	33.3	94.550	4301	406644	104000	6	7.50	37.00
14.0	19500	30.1	104.560	187	19552	104000	6	5.50	37.00
13.0	19500	26.9	117.000	374	43757	104000	6	5.50	30.00
11.0	19500	24.1	130.050	425	55272	104000	6	4.00	22.00
10.0	19500	22.2	142.280	4301	611940	104000	6	4.00	15.00
9.00	19500	19.6	160.980	374	60207	104000	6	4.00	15.00
8.00	19500	17.7	178.490	2057	367164	104000	6	4.00	15.00
7.00	19100	15.5	199.510	935	186543	104000	6	4.00	15.00

Gearbox with mounting flange

The gearboxes with mounting flange are available for mounting the following motors:
- Three-phase AC motor according to IEC 72/DIN 42948 with FT/FF flange mounting
- Three-phase AC motor according to NEMA with C/TC flange mounting
- Servo motors with FT/FF flange mounting according to IEC 72/DIN 42948

Mounting flange for three-phase AC motors

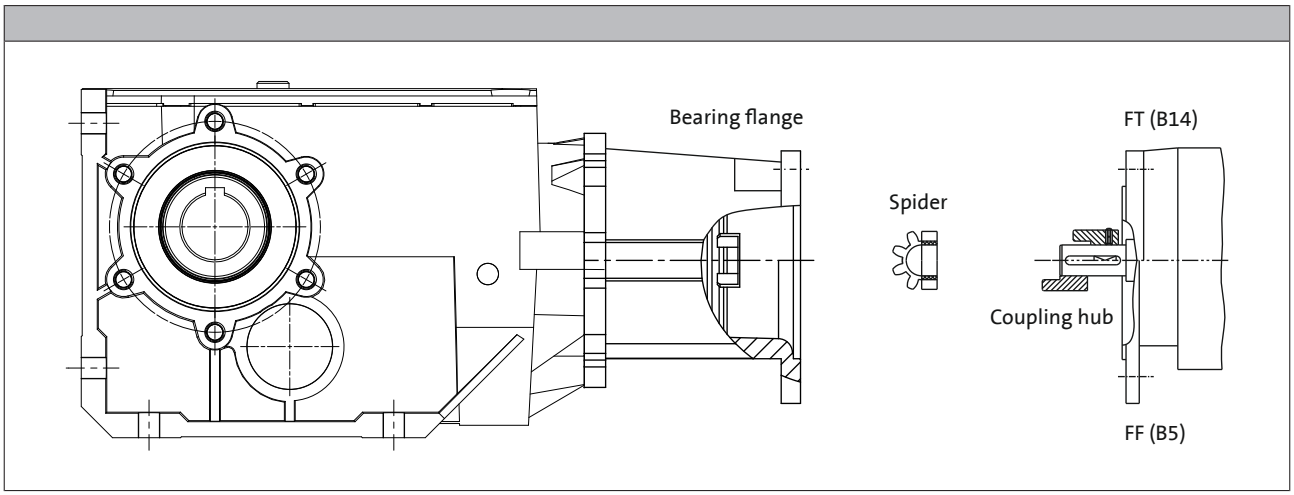

Mounting flange
- For three-phase AC motors according to IEC 72/DIN 42948
- For three-phase AC motors according to NEMA C
- Two-bearing shaft
- Coupling half on the gearbox side integrated in the shaft

Spider (ring gear)
- Torsionally rigid
- Conformal
- Low backlash (with clamping hub / backlash-free clamping ring hub)

38 - Permissible drive power and output torques.

Coupling hub
Standard:
- Coupling hub with keyway for motor shafts according to IEC

Optional coupling hubs for frequent shocks and load alternations or reduced clutch backlash:
- Clamping hub with tangential terminal screw for motor shafts with featherkey, backlash-free
- Clamping ring hub for motor shafts without slot, backlash-free

Gearbox with mounting flange

Mounting flange for three-phase AC motors

► The power information and motor sizes refer to 4-pole IEC standard motors.

Mounting flange for three-phase AC motors according to IEC

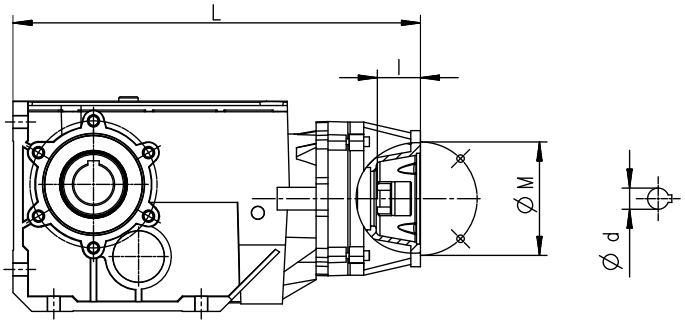

Motor				Bearing flange		Gearbox g500								
	Size					-B45	-B110	-B240	-B450	-B600	-B820	-B1500	-B2700	-B4300
P_1		d	l	M		L								
[kW]		[mm]	[mm]	[mm]		[mm]								
0.12 0.18	63	11	23	FF75	N1A	208	275	335						
					N2B		275	335	342	362	387			
				FF130	N6C [1]		292	352	359	379	404	470		
0.25 0.37	71	14	30	FF85	N1B		292	352	359	379	404			
					N3C		292	352	359	379	404	470		
				FF100	N4C		292	352	359	379	404	470		
				FF130	N2C		292	352	359	379	404	470		
0.55 0.75	80	19	40	FF100	N7C		292	352	359	379	404	470		
				FF130	N1C		292	352	359	379	404	470		
					N2D		321	381	388	408	433	499	553	592
					N3E			381	388	408	433	499	553	592
1.1 1.5	90	24	50	FF130	N1D [2]		321	381	388	408	433	499	553	592
					N2E			381	388	408	433	499	553	592
					N2F						433	499	553	592
				FF165	N4E			401	408	428	453	519	573	612
					N3F						453	519	573	612
2.2 3.0	100	28	60	FF130	N1E			381	388	408	433	499	553	592
					N1F						433	499	553	592
4.0	112			FF215	N2G						497	563	617	656
5.5 7.5	132	38	80	FF215	N3G						517	583	637	676
				FF265	N1G						517	583	637	676
					N3H							623	677	718
11.0 15.0	160	42	110	FF300	N1H							653	707	746
18.5 22.0	180	48	110	FF300	N2H							653	707	746

[1] Only clamping hub available.
[2] Only standard and clamping hub available.

137 - More gearbox dimensions
213 - Product extensions

Gearbox with mounting flange

Mounting flange for three-phase AC motors

Mounting flange for three-phase AC motors according to NEMA

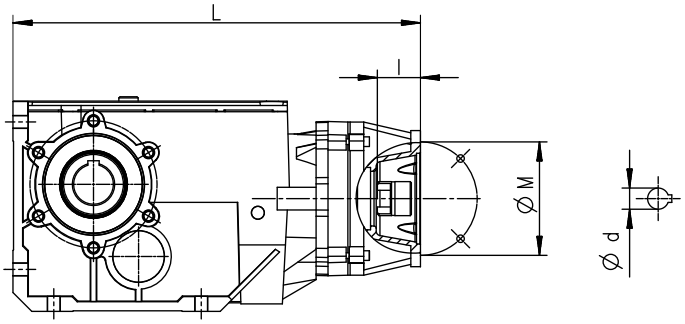

Größe			Bearing flange		Gearbox g500							
Size					-B110	-B240	-B450	-B600	-B820	-B1500	-B2700	-B4300
	d	l	M		L							
	[inch]	[inch]	[inch]		[mm]							
56 C	0.625	1.875	5.875	A5C	307	367	374	394	419	485		
143/145 TC	0.875	2.250	5.875	A5D	345	405	412	432	457	523	577	616
182/184 TC	1.125	2.750	7.252	A5E		422	430	450	475	541	595	634
213/215 TC	1.375	3.375	7.252	A5G					543	609	663	702
254/256 TC	1.625	4.000	7.252	A5H					582	648	702	741
284/286 TC	1.875	4.625	9.000	A6H						658	712	751

137 - More gearbox dimensions

213 - Product extensions

Gearbox with mounting flange

Mounting flange for servo motors

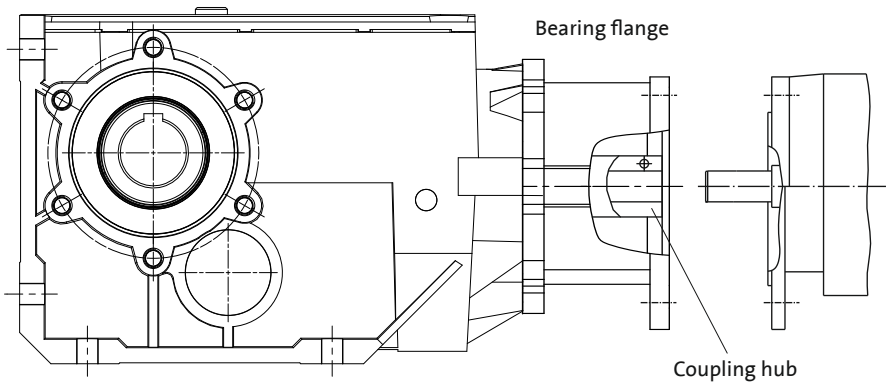

Mounting flange
- Flange dimensions according to IEC 72/DIN 42948
- Drive shaft designed as clamping hub with tangential terminal screw for motor shafts without featherkey, backlash-free
- overall lengths optimised

Gearbox with mounting flange

Mounting flange for servo motors

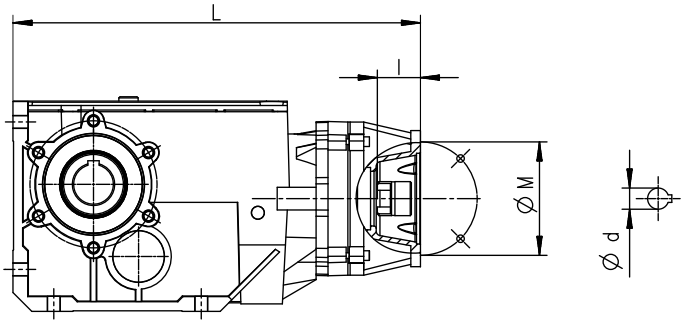

Motor			Bearing flange		Gearbox g500							
					-B110	-B240	-B450	-B600	-B820	-B1500	-B2700	-B4300
M	d	l	M		L							
[mm]	[mm]	[mm]	[mm]		[mm]							
75	11	23	FT75	S2B	231	291	298	318	343			
	14	30		S3B	231	291	298	318	343			
100	14	30	FF100	S4C	246	306	313	333	358	424		
	19	40		S7C	246	306	313	333	358	424		
	16	40		S8C	246	306	313	333	358	424		
115	19	50	FF115	S3D	263	323	330	350	375	441	287	534
	24	50		S4D	263	323	330	350	375	441	287	534
130	19	50	FF130	S2D	263	323	330	350	375	441	287	534
	24	50		S1D	263	323	330	350	375	441	287	534
	24	60		S2E		323	330	350	375	441	287	534
	28	60		S1E		323	330	350	375	441	287	534
165	24	50	FF165	S4E		323	330	350	375	441	287	534
	32	58		S6E		323	330	350	375	441	287	534
	28	60		S7E		323	330	350	375	441	287	534

137 - More gearbox dimensions
213 - Product extensions

Surface and corrosion protection

For optimum protection of geared motors against ambient conditions, the surface and corrosion protection system (OKS) offers tailor-made solutions.

Various surface coatings combined with other protective measures ensure that the geared motors operate reliably even at high air humidity, in outdoor installations or in the presence of atmospheric impurities. Any colour from the RAL Classic collection can be chosen for the top coat. The geared motors are also available unpainted (no surface and corrosion protection).

Surface and corrosion protection	Applications	Product		
		g500-H45 ... H450 g500-S130 ... S660 g500-B45 ... B450	g500-H600 ... H3000 g500-S950 ... S4500 g500-B600 ... B4300	g500-H5000 ... H14000 g500-S8000 ... S19000 g500-B8000 ... B20000
Without OKS(uncoated) [1]	• Interior installation, no special corrosion protection required • Paint provided by the customer	Standard		
OKS-G (primed)	• Dependent on subsequent top coat applied	Optional	Optional	Optional
OKS-S (small)	• Standard applications • Internal installation in heated buildings • Air humidity up to 90%		Standard	Standard
OKS-M (medium)	• Internal installation in non-heated buildings • Covered, protected external installation • Air humidity up to 95%		Optional	Optional
OKS-L (large)	• External installation • Air humidity above 95% • Chemical industry plants • Food industry			
OKS-XL (extra Large) [2]	• External installation • Air humidity above 95 % • Chemical industry plants • Food industry • Coastal areas with moderate salinity			

[1] Aluminium parts are uncoated, fan covers are zinc-coated or primed in grey, cast iron parts primed in grey.
Light colour deviations of the components are possible.
[2] On request

Surface and corrosion protection

Structure of surface coating

Surface and corrosion protection	Corrosivity category	Surface coating	Colour	Coating thickness
	DIN EN ISO 12944-2	Structure		
Without OKS(uncoated)		• Dipping primer of the grey iron parts		30 ... 50 µm
OKS-G (primed)		• Dipping primer of the grey iron parts • 2K PUR priming coat		60 ... 90 µm
OKS-S (small)	Comparable to C1	• Dipping primer of the grey iron parts • 2K-PUR top coat	• Standard: RAL 7012 • Optional: RAL Classic	80 ... 120 µm
OKS-M (medium)	Comparable to C2	• Dipping primer of the grey iron parts • 2K PUR priming coat • 2K-PUR top coat		110 ... 160 µm
OKS-L (large)	Comparable to C3			140 ... 200 µm
OKS-XL (extra Large) [1]	Comparable to C4	• Dipping primer of the grey iron parts • 2K-EP priming coat (two times) • 2K-PUR top coat		160 ... 240 µm

[1] On request

Lubricants

Lenze gearboxes and geared motors are ready for operation on delivery and are filled with lubricants specific to both the drive and the design. The mounting position and design specified in the order are key factors in choosing the volume of lubricant.
The amount and type of lubricant contained in the gearbox are given on the nameplate.

The following gearboxes are lubricated for life:
- Helical gearbox g500-H45 ... 140
- Shaft-mounted helical gearbox g500-S130
- Bevel gearbox g500-B45 ... 240

Lubricant table

The following lubricants are recommended:

Mode	CLP 220	CLP 460	CLP HC 220
Ambient temperature [°C]	0 ... +40		-25 ... +50
Specification	Mineral oil with EP additives		Synthetic oil (polyalfaolefins basis)
Changing interval	16000 operating hours After 3 years at the latest Oil temperature 70 °C		25000 operating hours After 4 years at the latest Oil temperature 70 °C
Fuchs	Renolin CLP 220 CLP Plus 220	Renolin CLP 460 CLP Plus 460	Renolin Unisyn CLP 220 XT220
Klüber	Klüberoil GEM 1-220 N	Klüberoil GEM 1-460 N	Klübersynth GEM 4-220 N
Shell	Shell Omala S2 G 220 S2 GX 220	Shell Omala S2 G 460 S2 GX 460	Shell Omala S4 GX HD 220

Mode	CLP HC 320	CLP HC 220 USDA H1	CLP PG 460 USDA H1
Ambient temperature [°C]	-25 ... +50	-20 ... +40	
Specification	Synthetic oil (polyalfaolefins basis)		Synthetic oil (polyglycol basis)
Changing interval	25000 operating hours After 4 years at the latest Oil temperature 70 °C	16000 operating hours After 3 years at the latest Oil temperature 70 °C	
Fuchs	Renolin Unisyn CLP 320 XT 320	Cassida Fluid GL 220	Cassida Fluid WG 460
Klüber	Klübersynth GEM 4-320 N	Klüberoil 4 UH1-220 N	Klüberoil UH1 6-460
Shell	Shell Omala S4 GX HD 320		

► Please contact your Lenze sales office if you are operating at ambient temperatures in areas up to< -20 °C bzw. > or up to +40°C.

Shaft sealing rings

By default, the gearboxes come with NBR shaft sealing rings at the output end. At high speed and unfavourable ambient conditions such as high temperature, reduced circulation of air etc., Lenze recommends the use of FKM (Viton) shaft sealing rings.

Please consider this in your order.

Ventilation

Non-ventilated gearboxes

No ventilation is required for the gearboxes g500-B45 ... B240.

Ventilated gearboxes

The gearbox g500-B240 can be optionally ordered with breather elements.
From g500-B450 onwards, the gearboxes are supplied with a breather element as standard.

Gearbox in combined mounting position

For reducing the number of versions, the gearboxes can also be ordered in a combined mounting position:

- g500-B45 in mounting position ABCDEF
- g500-B110 ... B450 in mounting position AEF

In these gearboxes, the lubricant amount has been optimised for the use in different mounting positions. If required, the breather elements are loosely enclosed and have to be mounted before commissioning depending on the mounting position.
A gearbox can be used for several mounting positions.

Ventilation

Position of ventilation, sealing elements and oil level check

g500-B240

Mounting position A	Mounting position B	Mounting position C
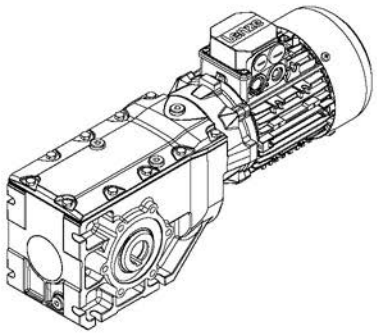	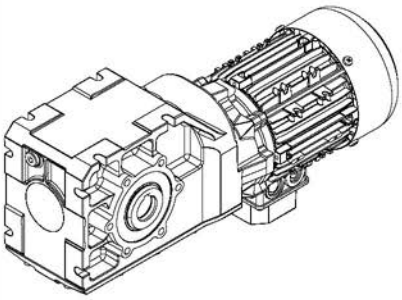	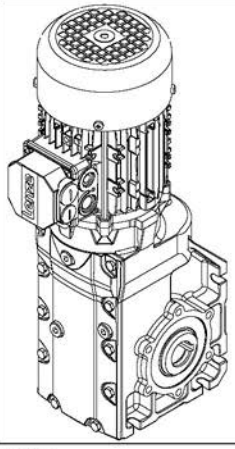
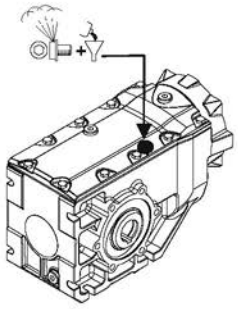	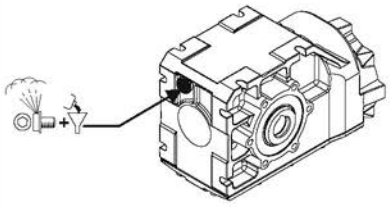	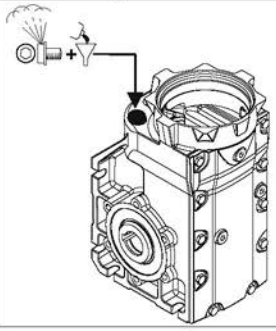
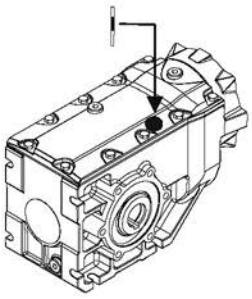	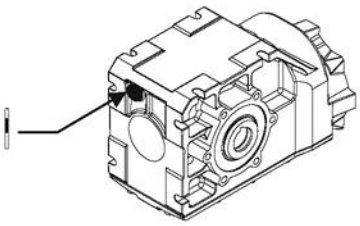	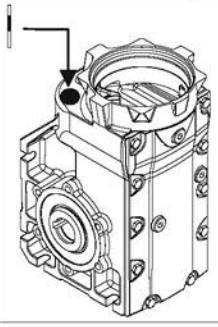
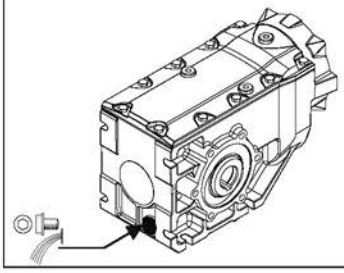	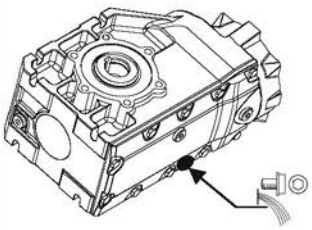	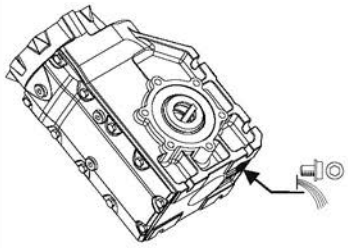

	Filling		Drain
	Breathing		Control

Ventilation

Position of ventilation, sealing elements and oil level check

g500-B240

Mounting position D	Mounting position E	Mounting position F
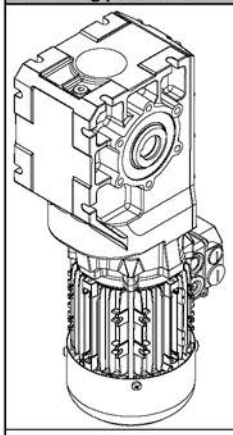	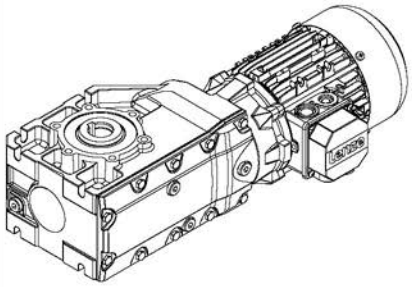	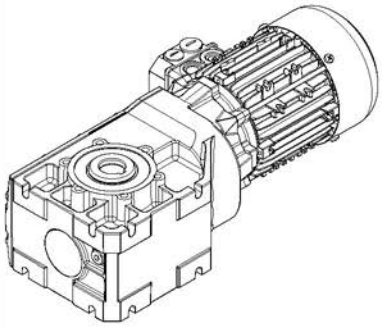
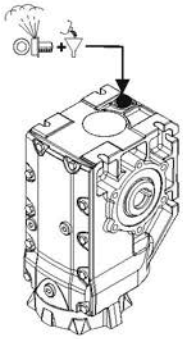	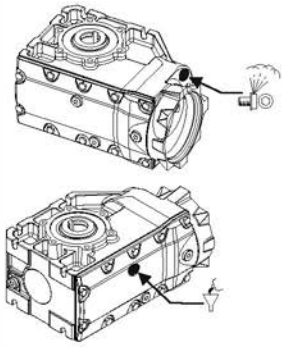	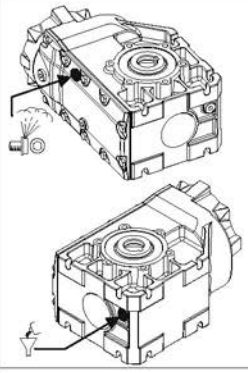
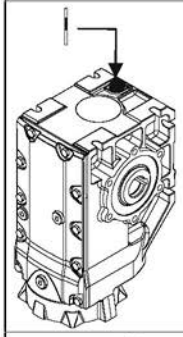	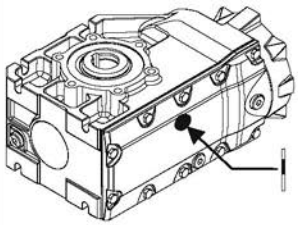	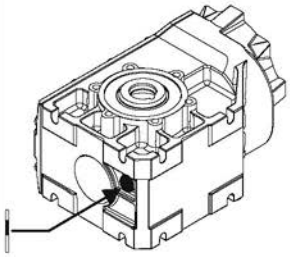
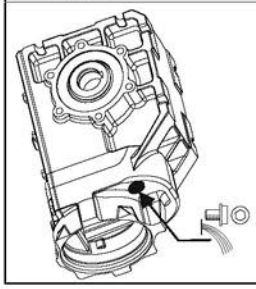	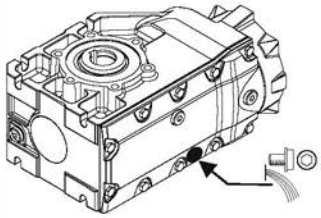	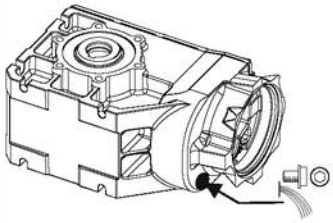

	Filling		Drain
	Breathing		Control

Ventilation

Position of ventilation, sealing elements and oil level check

g500-B450

Mounting position A	Mounting position B	Mounting position C
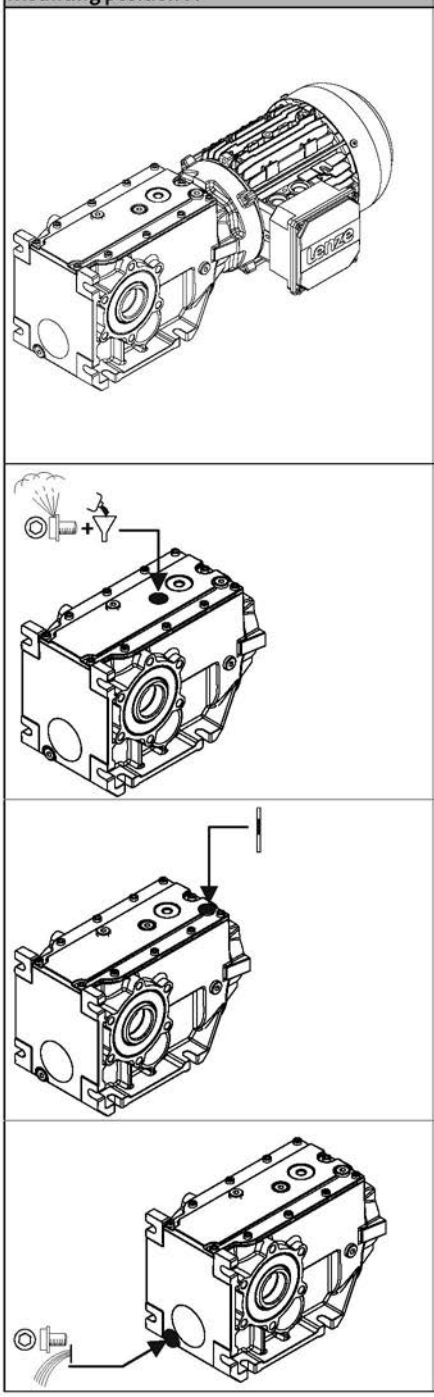	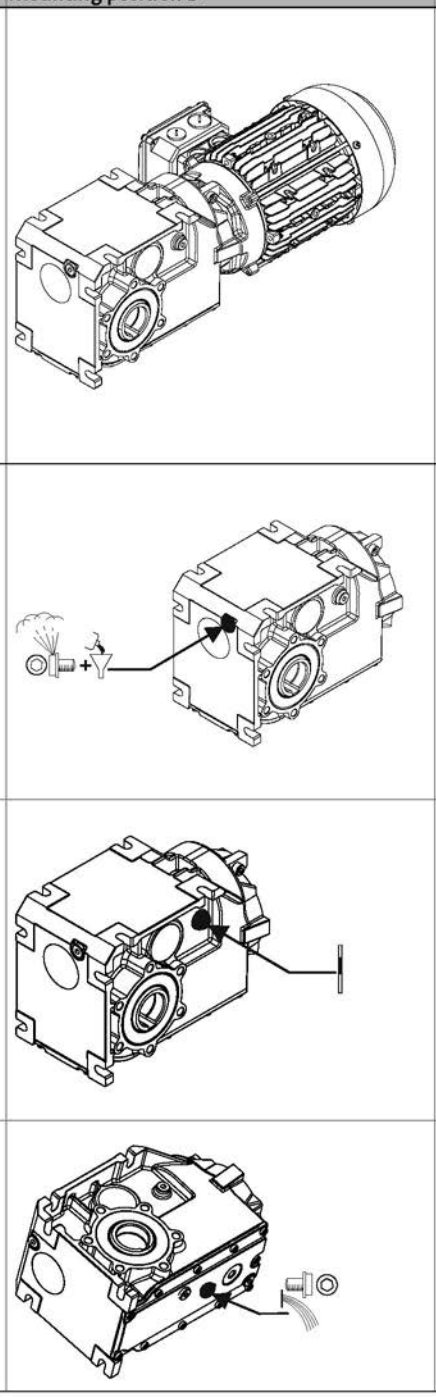	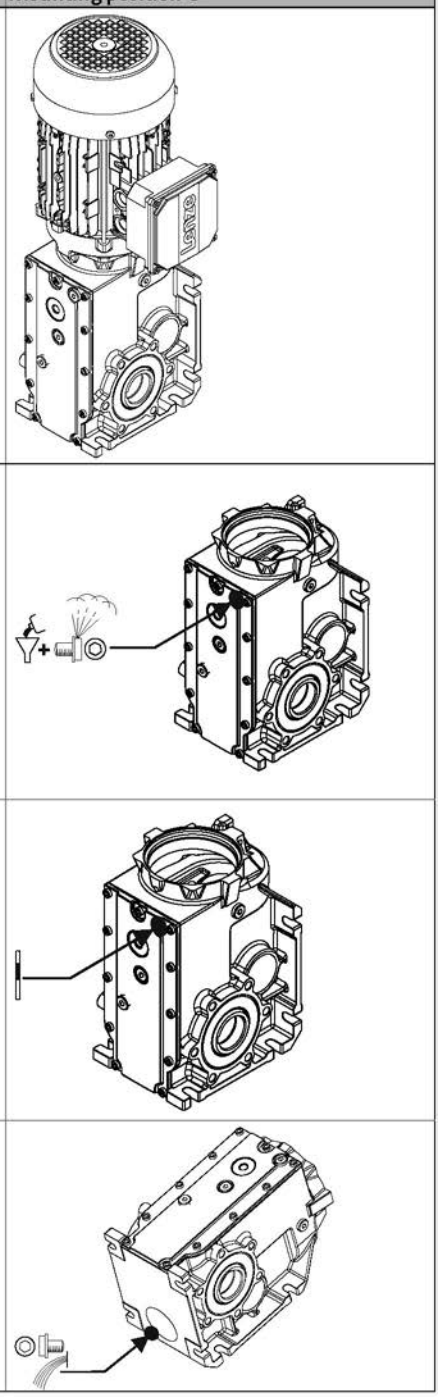

	Filling		Drain
	Breathing		Control

Ventilation

Position of ventilation, sealing elements and oil level check

g500-B450

Mounting position D	Mounting position E	Mounting position F
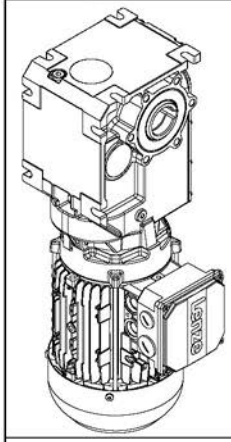	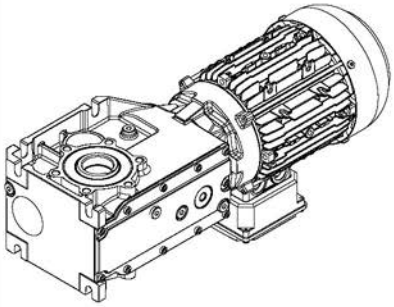	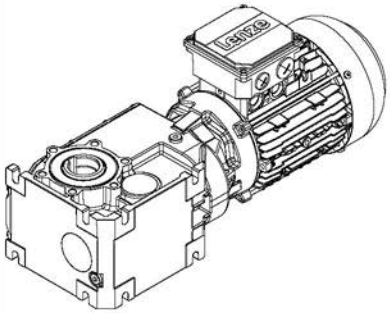
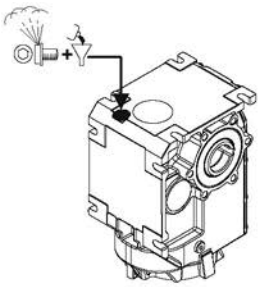	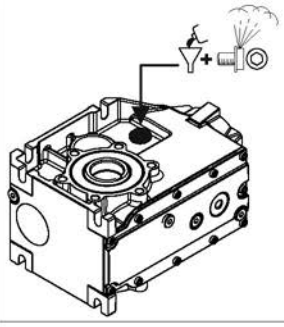	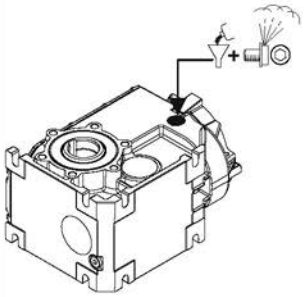
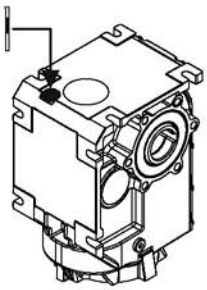	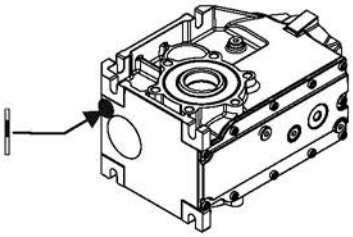	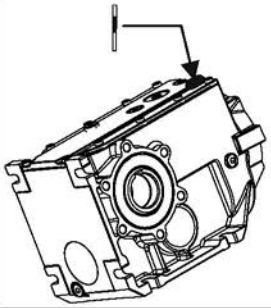
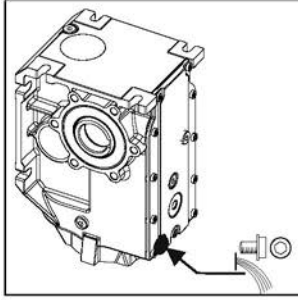	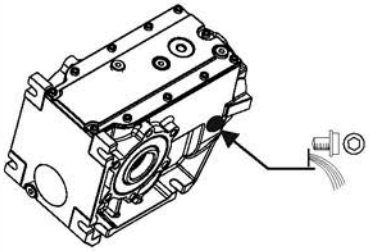	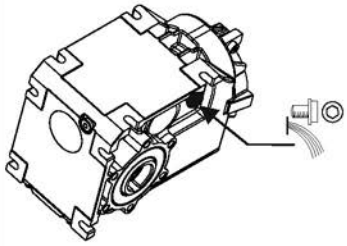

	Filling		Drain
	Breathing		Control

Ventilation

Position of ventilation, sealing elements and oil level check

g500-B600 ... B4300

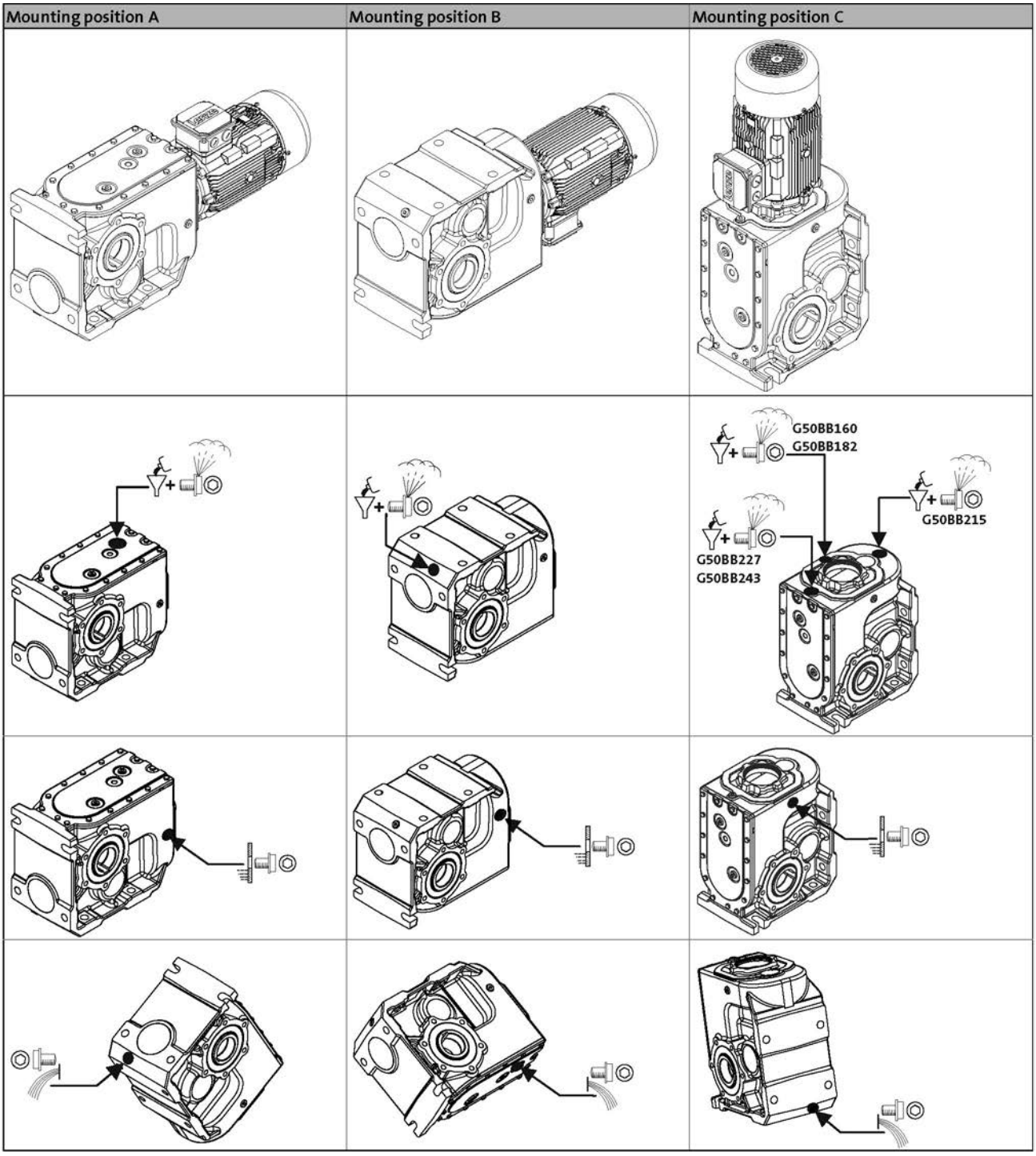

	Filling		Drain
	Breathing		Control

Ventilation

Position of ventilation, sealing elements and oil level check

g500-B600 ... B4300

Mounting position D	Mounting position E	Mounting position F
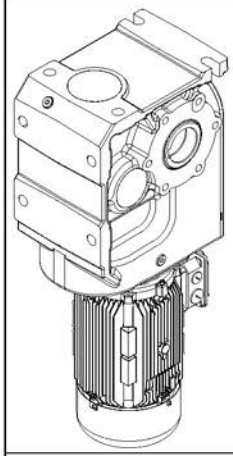	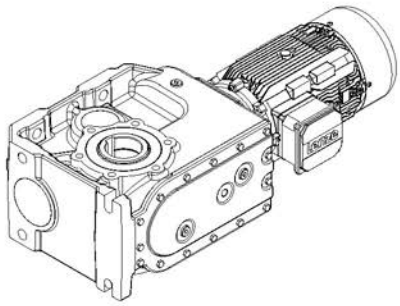	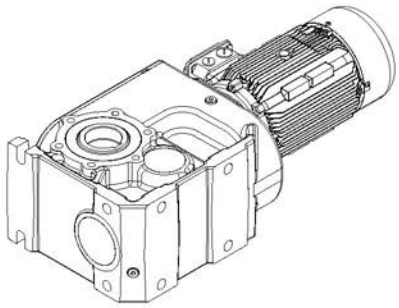
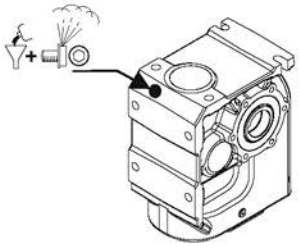	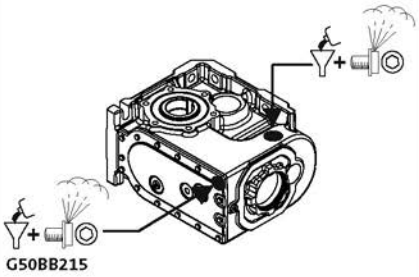	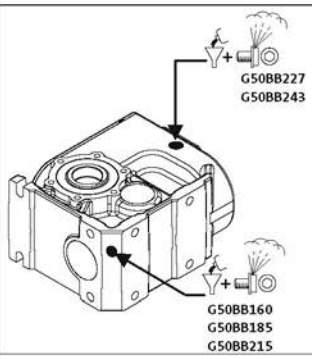
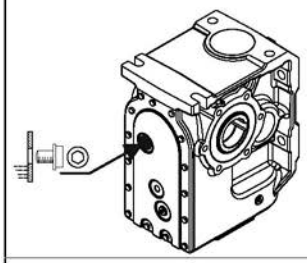	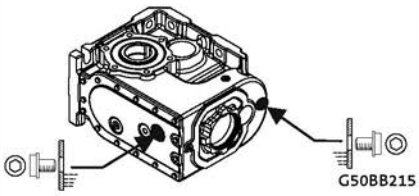	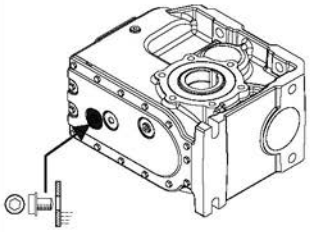
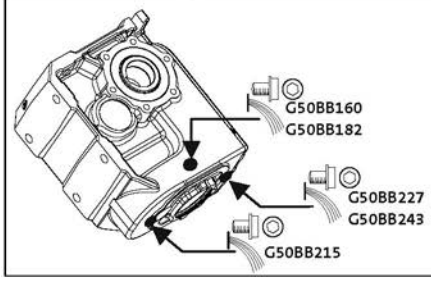	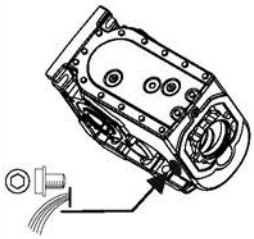	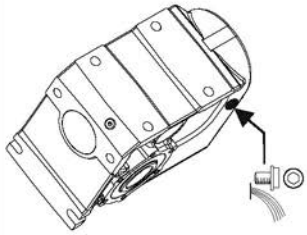

	Filling		Drain
	Breathing		Control

Ventilation

Position of ventilation, sealing elements and oil level check

g500-B8000 ... B20000

Mounting position A	Mounting position B	Mounting position C
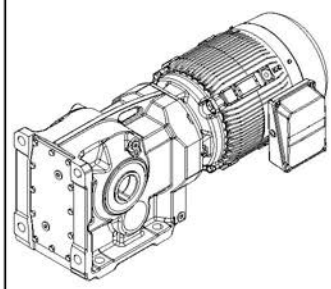	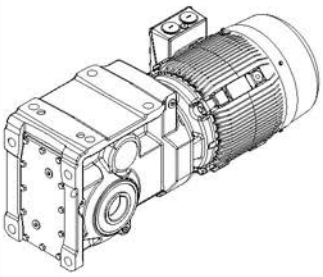	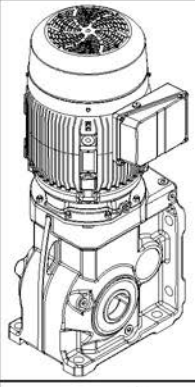
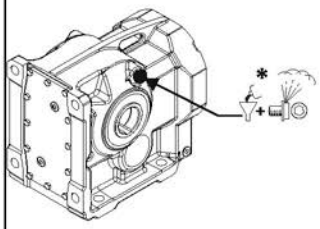	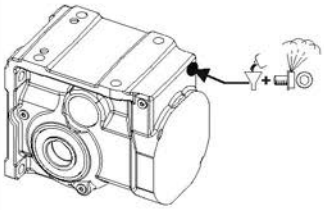	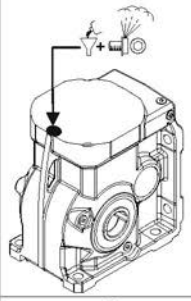
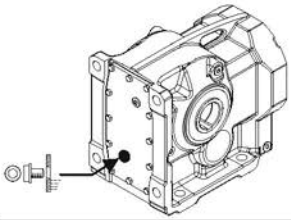	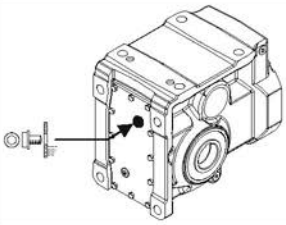	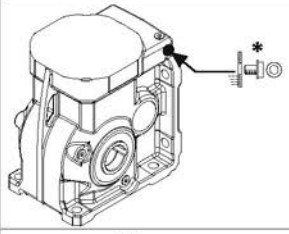
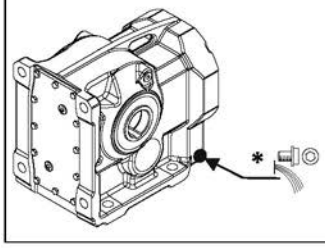	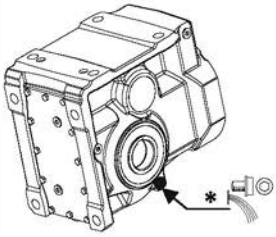	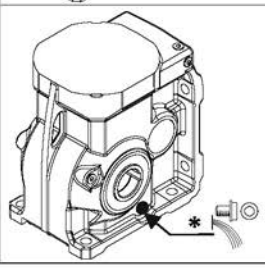

	Filling		Drain
	Breathing		Control
*	Borehole on both sides		

6.5

Ventilation

Position of ventilation, sealing elements and oil level check

g500-B8000 ... B20000

Mounting position D	Mounting position E	Mounting position F
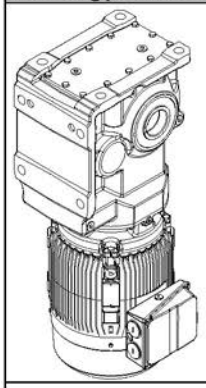	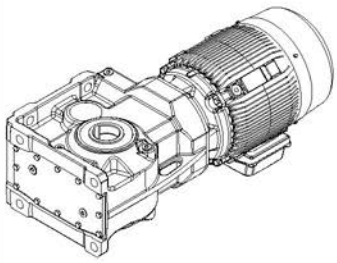	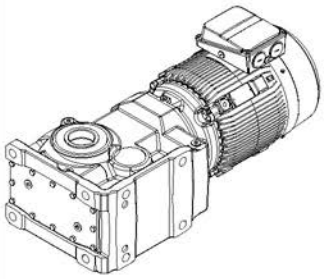
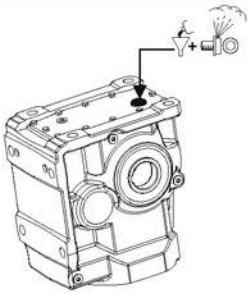	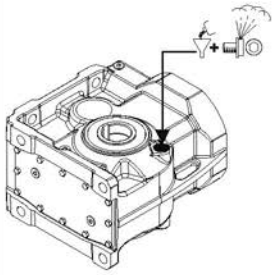	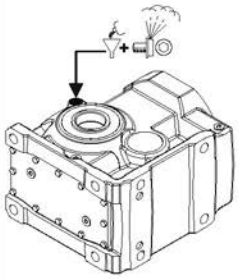
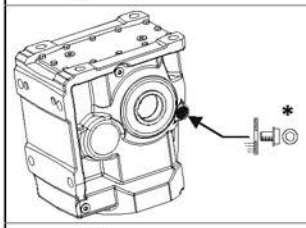	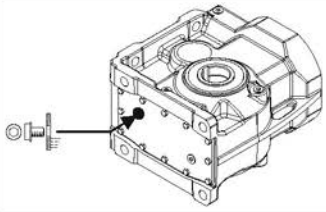	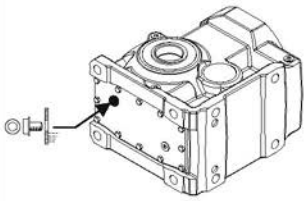
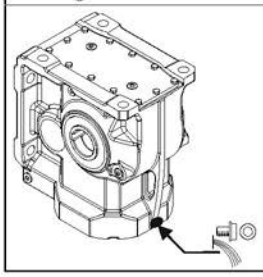	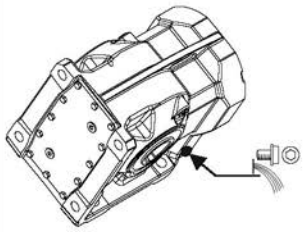	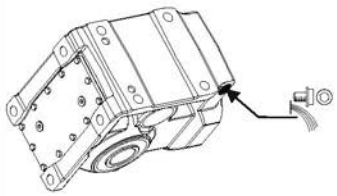

	Filling		Drain
	Breathing		Control
*	Borehole on both sides		

6.5

Standards and operating conditions

Geared motor data

Product					
Motor			MD□MA□□	m550	m540
Degree of protection					
EN 60529			IP55 [1] IP65 [1, 3] IP66 [1, 3]		IP55 [1] IP65 [1]
Energy efficiency class					
IEC 60034-30			IE1	IE3	
IEC 60034-2-1			Methodology for measuring efficiency		
10 CFR Part 431 (U.S. Integral hp Rule)				Table 5 (Premium Efficiency), CC127B	
GB18613-2012 (China Energy Label optional)				Grade 2	
Conformity					
CE			Low-Voltage Directive		
			2006/95/EC	2014/35/EU	
EAC			TP TC 004/2011 (TR CU 004/2011)		
Approval					
CCC			GB Standard 12350-2009		
CSA			CSA 22.2 No. 100		
cURus			UL 1004-1 UL 1004-8 File-No. E210321		UL 1004-1 File-No. E210321
Temperature class					
IEC/EN 60034-1; utilisation			B		
IEC/EN 60034-1; insulation system (enamel-insulated wire)			F		
Min. ambient operating temperature					
	$T_{opr,min}$	[°C]	-20		
Max. ambient temperature for operation					
	$T_{opr,max}$	[°C]	40		
With power reduction	$T_{opr,max}$	[°C]	60 [2]		
Site altitude					
Current derating at over 1000 m		[%/1000 m]	5.00		
Amsl	H_{max}	[m]	4000		

[1] Designs with different degrees of protection:
IP55 with brake (IP54 with manual release lever).
IP54 with resolver RS1.
IP54 with HTL incremental encoder IG128-24V-H.
[2] In case of cURus max. 40 °C are permissible.
[3] m550 on request.

► In the European Union, the ErP Directive stipulates minimum efficiency levels for three-phase AC motors. Geared three-phase AC motors that do not conform with this Directive do not meet CE requirements and must not be marketed in the European Economic Area. For further information about the ErP Directive, the efficiency regulations in other countries and the Lenze products concerned, please refer to the brochure "International efficiency directives for three-phase AC motors".

Permissible radial and axial forces at output

Permissible radial force

$F_{rad,perm} = f_w \times F_{rad,max}$

► If F_{rad} **and** $F_{ax} \neq 0$, please contact Lenze.

Permissible axial force

If there is no radial force, the maximum permissible axial force is 50 % of the table value $F_{rad,max}$

Application of forces

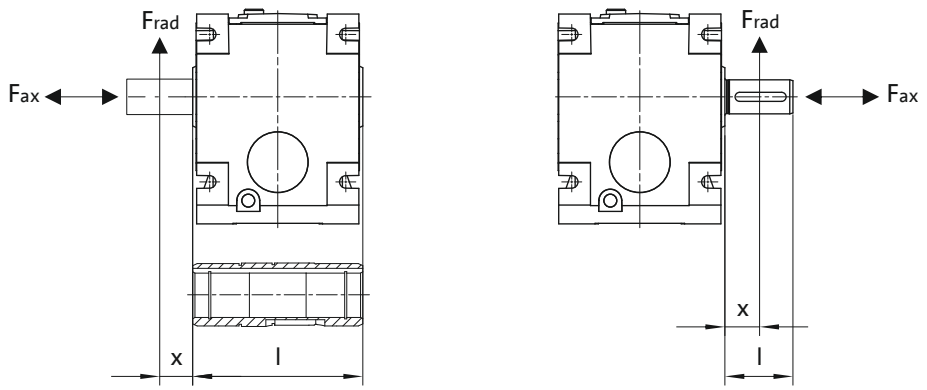

Additional load factor f_w at output shaft

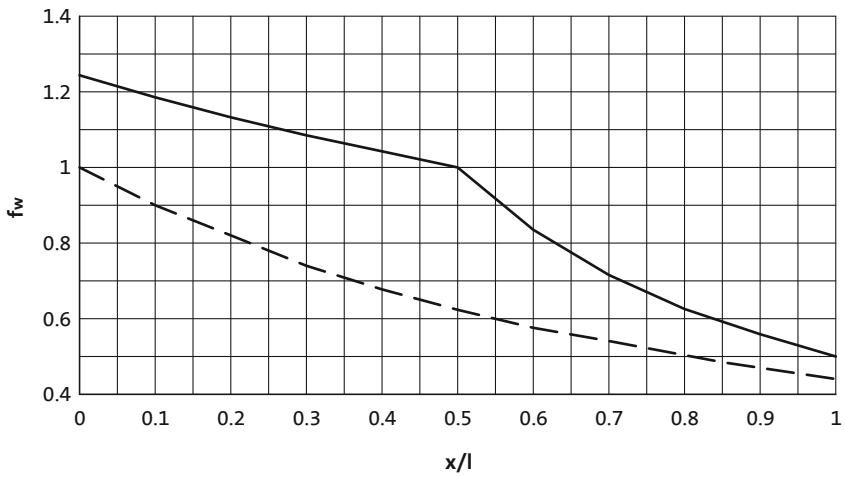

——— Solid shaft
— — — Hollow shaft

Permissible radial and axial forces at output

The values given in the table refer to the center shaft end force application point and are minimum values calculated according to the most unfavourable conditions (force application angle, mounting position, direction of rotation). The values were calculated for the motor/gearbox combination with a load capacity of c= 1.3 and an input speed of 1400 rpm.

In case of different operating conditions, considerably higher forces can be transmitted. Please contact Lenze.

► A hollow shaft with shrink disc requires a check by Lenze.

Product	n_2 [r/min]						
	250	160	100	63	40	25	≤16
	Max. radial force, Hollow shaft						
	$F_{rad,max}$ [N]	$F_{rad,max}$ [N]	$F_{rad,max}$ [N]	$F_{rad,max}$ [N]	$F_{rad,max}$ [N]	$F_{rad,max}$ [N]	$F_{rad,max}$ [N]
g500-B45	2500	2800	3000	3000	3000	3000	3000
g500-B110	3000	3300	3600	3600	3600	3600	3600
g500-B240	4500	5100	6200	7400	7800	7800	7800
g500-B450	5200	5200	5500	7000	9000	9000	9000
g500-B600	5400	5600	6000	8000	9400	9500	9500
g500-B820	5800	6000	7000	9000	9800	10200	10200
g500-B1500	7000	8000	9000	10500	13000	16000	16000
g500-B2700	8200	9400	10600	12200	15000	18000	21900
g500-B4300	9000	10500	12000	15500	21000	27900	35100
g500-B8000		32000	35000	38000	45000	55000	65000
g500-B13000		45000	45000	53000	65000	70000	70000
g500-B20000			76000	90000	104000	104000	104000

	Max. radial force, Solid shaft without flange						
	$F_{rad,max}$ [N]	$F_{rad,max}$ [N]	$F_{rad,max}$ [N]	$F_{rad,max}$ [N]	$F_{rad,max}$ [N]	$F_{rad,max}$ [N]	$F_{rad,max}$ [N]
g500-B45	2100	2400	2800	3000	3000	3000	3000
g500-B110	2500	2700	3000	3000	3000	3000	3000
g500-B240	3600	4500	5000	6000	6500	6500	6500
g500-B450	3900	4300	5000	6000	7600	7800	7800
g500-B600	4700	5400	6700	8300	9000	9000	9000
g500-B820	9800	11000	11000	11000	11000	11000	11000
g500-B1500	11500	13000	16000	16000	16000	16000	16000
g500-B2700	12000	14000	16500	20100	22700	25500	27500
g500-B4300	13300	14900	17300	20800	25700	32200	40000
g500-B8000		34000	36000	42000	50000	59000	65000
g500-B13000		45000	45000	56000	62000	70000	70000
g500-B20000			51000	61000	77000	96000	104000

Permissible radial and axial forces at output

Product	n_2 [r/min]						
	250	160	100	63	40	25	≤16
	Max. radial force, Solid shaft with flange						
	$F_{rad,max}$ [N]	$F_{rad,max}$ [N]	$F_{rad,max}$ [N]	$F_{rad,max}$ [N]	$F_{rad,max}$ [N]	$F_{rad,max}$ [N]	$F_{rad,max}$ [N]
g500-B45	2100	2400	2800	3000	3000	3000	3000
g500-B110	2500	2700	3000	3000	3000	3000	3000
g500-B240	6000	6500	6500	6500	6500	6500	6500
g500-B450	5100	5600	6400	7700	7800	7800	7800
g500-B600	5300	6000	7300	9000	9000	9000	9000
g500-B820	10200	11000	11000	11000	11000	11000	11000
g500-B1500	12000	13000	15000	16000	16000	16000	16000
g500-B2700	14400	15800	17700	20100	22700	25500	27500
g500-B4300	15800	17800	20800	24800	29500	35100	40000
g500-B8000		34000	36000	42000	50000	59000	71500
g500-B13000		45000	45000	56000	62000	73000	77000
g500-B20000			51000	61000	77000	96000	114000

Selection tables, notes

Notes on the selection tables with 4-pole motors

The selection tables show the available combinations of gearbox type, number of stages, ratio and motor. They are used only to provide basic orientation.
The following legend indicates the structure of the selection tables.

Rated power Prated of the drive motor depending on the rated frequency

50 Hz: P_N = 0.75 kW
87 Hz: P_N = 1.35 kW

2-stufige Getriebe ← **Number of the gear stage of the gearbox**

Torque diagram

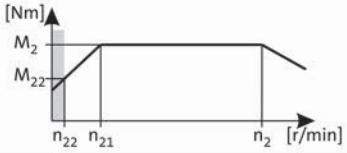

Mains operation 400 V, 50 Hz			Inverter operation 5 Hz -		- 20 Hz		- 50 Hz (1:10)			- 87 Hz (1:17.4)			i	Product		
n_2 [r/min]	M_2 [Nm]	c	n_{22} [r/min]	M_{22} [Nm]	n_{21} [r/min]	M_2 [Nm]	n_2 [r/min]	M_2 [Nm]	c	n_2 [r/min]	M_2 [Nm]	c		g500	m5□□	
407	17	4.9	41	13	168	17	407	17	4.9	718	17	4.0	3.565	-B240	50-P80/M4	
280	24	2.8	28	19	116	24	280	24	2.8	494	25	2.3	5.185	-B110	50-P80/M4	

Product Gearbox **Product Motor** **Ratio i** **Page number for dimensions**

Load capacity c of the gearbox
c is the ratio between the permissible rated torque of the gearbox and the rated torque of the three-phase AC motor (converted to the driven shaft).
c must be always higher than the service factor **k** determined for the application **k**.

$$c = \frac{M_{2,zul}}{M_{1N} \cdot i \cdot \eta_{Getr}} > k$$

Mains operation
Output speed **n2**
Output torque **M2**

Inverter operation
The speed and torque data are valid for self-ventilated and forced ventilated drives. Forced ventilated drives can always output the torque **M2** in the entire setting ranges. In the case of self-ventilated drives, a reduction to **M22** is required in the lower speed range.

Motor voltages

The power values and torques indicated in the selection tables refer to the following motor voltages:
- 50 Hz : Δ 230 V / Y 400 V
- 87 Hz : 400 V

Operation at 87 Hz

In 87 Hz operation, the three-phase AC motor (which is designed for a voltage of Δ 230 V / Y 400 V at 50 Hz) is operated on an inverter with 400 V rated voltage in a delta connection. It is important to note here that the inverter must be configured for 87Hz output.
This offers the following advantages over 50 Hz operation:
- the setting range of the motor is increased by a factor of 1.73.
- the motor can then provide around 1.73 times greater output, which in turn allows a smaller and more affordable motor to be selected for the application.
- the efficiency of the motor is also improved.

Selection tables, 4-pole motors

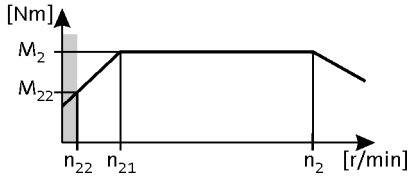

50 Hz: P_N = 0.06 kW
87 Hz: P_N = 0.11 kW

2-stage gearboxes

Mains operation 400 V, 50 Hz			Inverter operation 5 Hz -		- 20 Hz		- 50 Hz (1:10)			- 87 Hz (1:17.4)			i	Product		
n_2 [r/min]	M_2 [Nm]	c	n_{22} [r/min]	M_{22} [Nm]	n_{21} [r/min]	M_2 [Nm]	n_2 [r/min]	M_2 [Nm]	c	n_2 [r/min]	M_2 [Nm]	c		g500	MD□MA□□	
64	9.0	5.3	6.5	8.5	27	9.0	64	9.0	5.3	114	9.0	4.3	22.270	-B45	063-02	
57	10	4.7	5.8	9.6	24	10	57	10	4.7	101	10	4.4	25.051	-B45	063-02	
50	11	4.1	5.0	11	21	11	50	11	4.1	88	11	3.8	28.808	-B45	063-02	
44	12	3.6	4.4	12	18	12	44	12	3.6	78	13	3.4	32.593	-B45	063-02	
38	14	3.1	3.9	14	16	14	38	14	3.1	68	15	2.9	37.481	-B45	063-02	
34	16	2.8	3.4	16	14	16	34	16	2.8	60	17	2.7	42.222	-B45	063-02	
29	19	2.4	3.0	19	12	19	29	19	2.4	52	19	2.4	48.556	-B45	063-02	
26	21	2.2	2.7	21	11	21	26	21	2.2	47	21	2.1	53.889	-B45	063-02	
23	24	1.9	2.3	24	9.7	24	23	24	1.9	41	24	1.8	61.972	-B45	063-02	

Selection tables, 4-pole motors

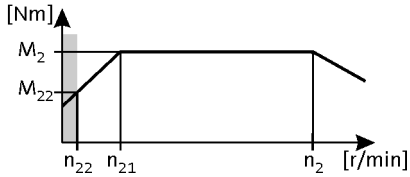

50 Hz: P_N = 0.09 kW
87 Hz: P_N = 0.16 kW

2-stage gearboxes

Mains operation 400 V, 50 Hz			Inverter operation 5 Hz -		- 20 Hz		- 50 Hz (1:10)			- 87 Hz (1:17.4)			i	Product		
n_2 [r/min]	M_2 [Nm]	c	n_{22} [r/min]	M_{22} [Nm]	n_{21} [r/min]	M_2 [Nm]	n_2 [r/min]	M_2 [Nm]	c	n_2 [r/min]	M_2 [Nm]	c		g500	MD□MA□□	
103	8.0	5.7	11	7.8	45	8.0	103	8.0	5.7	186	8.0	4.9	13.386	-B45	063-22	
91	9.0	5.0	9.6	8.8	40	9.0	91	9.0	5.0	164	9.0	4.3	15.111	-B45	063-22	
79	10	4.4	8.3	10	35	10	79	10	4.4	143	10	3.8	17.378	-B45	063-22	
71	11	3.9	7.5	11	31	11	71	11	3.9	128	11	3.4	19.365	-B45	063-22	
62	13	3.4	6.5	13	27	13	62	13	3.4	112	13	2.9	22.270	-B45	063-22	
55	15	3.0	5.8	15	24	15	55	15	3.0	99	15	3.0	25.051	-B45	063-22	
48	17	2.6	5.0	17	21	17	48	17	2.6	86	17	2.6	28.808	-B45	063-22	
42	19	2.3	4.4	19	18	19	42	19	2.3	76	19	2.3	32.593	-B45	063-22	
37	22	2.0	3.9	22	16	22	37	22	2.0	66	22	2.0	37.481	-B45	063-22	
33	25	1.8	3.4	25	14	25	33	25	1.8	59	25	1.8	42.222	-B45	063-22	
28	29	1.6	3.0	28	12	28	28	29	1.6	51	28	1.6	48.556	-B45	063-22	
26	32	1.4	2.7	32	11	31	26	32	1.4	46	31	1.4	53.889	-B45	063-22	
22	37	1.2	2.3	36	9.7	36	22	37	1.2	40	36	1.2	61.972	-B45	063-22	

Selection tables, 4-pole motors

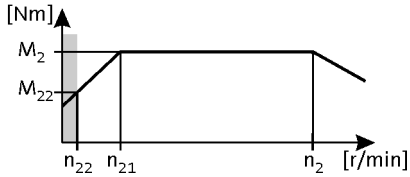

50 Hz: P_N = 0.12 kW
87 Hz: P_N = 0.21 kW

2-stage gearboxes

Mains operation 400 V, 50 Hz			Inverter operation 5 Hz -		- 20 Hz		- 50 Hz (1:10)			- 87 Hz (1:17.4)			i	Product		
n_2 [r/min]	M_2 [Nm]	c	n_{22} [r/min]	M_{22} [Nm]	n_{21} [r/min]	M_2 [Nm]	n_2 [r/min]	M_2 [Nm]	c	n_2 [r/min]	M_2 [Nm]	c		g500	MD□MA□□	
136	8.0	5.6	14	6.2	57	8.0	136	8.0	5.6	242	8.0	4.8	10.466	-B45	063-12	
122	9.0	5.1	13	6.8	52	9.0	122	9.0	5.1	218	9.0	4.3	11.640	-B45	063-12	
107	10	4.4	11	7.9	45	10	107	10	4.4	189	10	3.8	13.386	-B45	063-12	
94	12	3.9	9.6	8.9	40	11	94	12	3.9	168	11	3.3	15.111	-B45	063-12	
82	13	3.4	8.3	10	35	13	82	13	3.4	146	13	2.9	17.378	-B45	063-12	
74	15	3.0	7.5	11	31	15	74	15	3.0	131	15	2.6	19.365	-B45	063-12	
73	15	5.5	7.4	12	31	15	73	15	5.5	130	15	4.7	19.556	-B110	063-12	
64	17	2.6	6.5	13	27	17	64	17	2.6	114	17	2.3	22.270	-B45	063-12	
63	17	5.5	6.4	13	27	17	63	17	5.5	113	17	4.7	22.489	-B110	063-12	
57	19	2.4	5.8	15	24	19	57	19	2.4	101	19	2.3	25.051	-B45	063-12	
57	19	4.6	5.8	15	24	19	57	19	4.6	101	19	3.9	25.185	-B110	063-12	
50	22	2.0	5.0	17	21	22	50	22	2.0	88	22	2.0	28.808	-B45	063-12	
49	22	4.6	5.0	17	21	22	49	22	4.6	88	22	3.9	28.963	-B110	063-12	
45	24	4.0	4.5	19	19	24	45	24	4.0	79	24	3.4	31.919	-B110	063-12	
44	25	1.8	4.4	19	18	24	44	25	1.8	78	24	1.8	32.593	-B45	063-12	
39	28	3.9	4.0	22	16	28	39	28	3.9	69	28	3.4	36.707	-B110	063-12	
38	29	3.7	3.9	22	16	28	38	29	3.7	68	28	3.2	37.400	-B110	063-12	
38	29	1.6	3.9	22	16	28	38	29	1.6	68	28	1.5	37.481	-B45	063-12	
36	31	3.3	3.6	24	15	30	36	31	3.3	63	30	3.2	40.000	-B110	063-12	
34	32	1.4	3.4	25	14	32	34	32	1.4	60	32	1.4	42.222	-B45	063-12	
33	33	4.6	3.4	26	14	33	33	33	4.6	59	33	4.5	43.267	-B240	063-12	
31	35	3.1	3.2	27	13	35	31	35	3.1	55	35	3.0	46.000	-B110	063-12	
30	37	3.0	3.0	28	13	36	30	37	3.0	53	36	2.9	48.167	-B110	063-12	
29	37	1.2	3.0	29	12	36	29	37	1.2	52	36	1.2	48.556	-B45	063-12	
29	38	4.6	3.0	29	12	37	29	38	4.6	52	37	4.5	49.133	-B240	063-12	
27	40	4.0	2.8	31	11	39	27	40	4.0	48	39	3.9	52.510	-B240	063-12	
27	40	1.7	2.8	31	11	40	27	40	1.7	48	40	1.7	52.698	-B110	063-12	
26	41	1.1	2.7	32	11	40	26	41	1.1	47	40	1.1	53.889	-B45	063-12	
24	46	4.0	2.4	35	10	45	24	46	4.0	43	45	3.9	59.630	-B240	063-12	
24	46	1.7	2.4	36	9.9	46	24	46	1.7	42	46	1.7	60.603	-B110	063-12	
23	47	2.4	2.4	36	9.8	46	23	47	2.4	42	46	2.4	61.045	-B110	063-12	
23	47	1.0	2.3	37	9.7	47	23	47	1.0	41	47	1.0	61.972	-B45	063-12	
21	51	3.1	2.2	40	8.9	50	21	51	3.1	38	50	3.2	67.113	-B240	063-12	
19	58	3.1	1.9	45	7.9	57	19	58	3.1	33	57	3.2	76.213	-B240	063-12	
19	58	1.9	1.9	45	7.8	57	19	58	1.9	33	57	1.9	76.500	-B110	063-12	

Selection tables, 4-pole motors

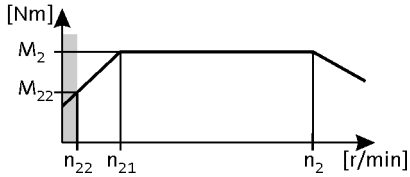

50 Hz: P_N = 0.12 kW
87 Hz: P_N = 0.21 kW

2-stage gearboxes

Mains operation 400 V, 50 Hz			Inverter operation 5 Hz -		- 20 Hz		- 50 Hz (1:10)			- 87 Hz (1:17.4)			i	Product		
n_2 [r/min]	M_2 [Nm]	c	n_{22} [r/min]	M_{22} [Nm]	n_{21} [r/min]	M_2 [Nm]	n_2 [r/min]	M_2 [Nm]	c	n_2 [r/min]	M_2 [Nm]	c		g500	MD□MA□□	
14	77	1.4	1.4	59	6.0	76	14	77	1.4	25	76	1.5	100.786	-B110	063-12	

3-stage gearboxes

Mains operation 400 V, 50 Hz			Inverter operation 5 Hz -		- 20 Hz		- 50 Hz (1:10)			- 87 Hz (1:17.4)			i	Product		
n_2 [r/min]	M_2 [Nm]	c	n_{22} [r/min]	M_{22} [Nm]	n_{21} [r/min]	M_2 [Nm]	n_2 [r/min]	M_2 [Nm]	c	n_2 [r/min]	M_2 [Nm]	c		g500	MD□MA□□	
21	51	4.7	2.1	39	8.8	50	21	51	4.7	37	50	4.6	68.459	-B240	063-12	
18	58	4.2	1.9	45	7.7	57	18	58	4.2	33	57	4.0	77.741	-B240	063-12	
16	65	3.7	1.7	50	6.9	64	16	65	3.7	29	64	3.6	87.563	-B240	063-12	
14	74	3.2	1.5	57	6.0	73	14	74	3.2	26	73	3.1	99.437	-B240	063-12	
13	85	2.8	1.3	65	5.3	83	13	85	2.8	22	83	2.9	113.673	-B240	063-12	
11	96	2.5	1.1	74	4.6	95	11	96	2.5	20	95	2.5	129.087	-B240	063-12	
9.9	110	4.1	1.0	85	4.2	108	9.9	110	4.1	18	108	4.2	144.128	-B450	063-12	
9.8	108	2.2	1.0	84	4.1	107	9.8	108	2.2	17	107	2.3	145.674	-B240	063-12	
8.9	122	3.7	0.9	94	3.8	120	8.9	122	3.7	16	120	3.8	159.807	-B450	063-12	
8.6	123	2.0	0.9	95	3.6	121	8.6	123	2.0	15	121	2.0	165.426	-B240	063-12	
8.1	134	3.4	0.8	103	3.4	131	8.1	134	3.4	15	131	3.4	174.919	-B450	063-12	
7.6	140	1.7	0.8	108	3.2	138	7.6	140	1.7	14	138	1.7	188.442	-B240	063-12	
7.3	148	3.0	0.7	114	3.1	146	7.3	148	3.0	13	146	3.1	193.948	-B450	063-12	
6.7	159	1.5	0.7	123	2.8	157	6.7	159	1.5	12	157	1.5	213.994	-B240	063-12	
6.4	171	2.6	0.6	132	2.7	168	6.4	171	2.6	11	168	2.7	223.563	-B450	063-12	
5.8	183	1.3	0.6	141	2.4	180	5.8	183	1.3	10	180	1.3	245.178	-B240	063-12	
5.7	189	2.4	0.6	146	2.4	186	5.7	189	2.4	10	186	2.4	247.882	-B450	063-12	
5.1	207	1.2	0.5	160	2.2	204	5.1	207	1.2	9.1	204	1.2	278.422	-B240	063-12	
4.5	237	1.0	0.5	182	1.9	233	4.5	237	1.0	8.0	233	1.0	317.617	-B240	063-12	
4.0	269	0.9	0.4	207	1.7	264	4.0	269	0.9	7.0	264	0.9	360.683	-B240	063-12	

Selection tables, 4-pole motors

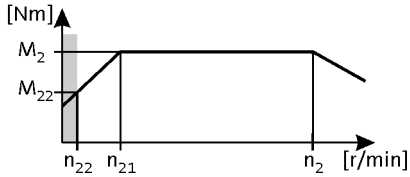

50 Hz: P_N = 0.18 kW
87 Hz: P_N = 0.33 kW

2-stage gearboxes

Mains operation 400 V, 50 Hz			Inverter operation 5 Hz -		- 20 Hz		- 50 Hz (1:10)			- 87 Hz (1:17.4)			i	Product		
n_2 [r/min]	M_2 [Nm]	c	n_{22} [r/min]	M_{22} [Nm]	n_{21} [r/min]	M_2 [Nm]	n_2 [r/min]	M_2 [Nm]	c	n_2 [r/min]	M_2 [Nm]	c		g500	MD□MA□□	
252	6.0	4.7	27	5.0	111	6.0	252	6.0	4.7	457	7.0	3.9	5.411	-B45	063-32	
219	7.0	4.7	23	5.7	96	7.0	219	7.0	4.7	398	8.0	3.9	6.222	-B45	063-32	
192	9.0	4.5	20	6.6	84	9.0	192	9.0	4.5	348	9.0	3.7	7.111	-B45	063-32	
167	10	4.5	18	7.5	73	10	167	10	4.5	303	10	3.7	8.178	-B45	063-32	
150	11	4.1	16	8.4	66	11	150	11	4.1	272	11	3.5	9.101	-B45	063-32	
130	13	3.6	14	9.6	57	13	130	13	3.6	237	13	3.0	10.466	-B45	063-32	
119	14	4.5	13	11	52	14	119	14	4.5	216	14	3.7	11.449	-B110	063-32	
117	14	3.2	13	11	52	14	117	14	3.2	213	14	2.7	11.640	-B45	063-32	
108	15	4.1	11	12	47	15	108	15	4.1	195	15	3.5	12.698	-B110	063-32	
102	16	2.8	11	12	45	16	102	16	2.8	185	16	2.4	13.386	-B45	063-32	
94	17	4.1	9.9	14	41	17	94	17	4.1	170	18	3.5	14.603	-B110	063-32	
90	18	2.5	9.6	14	40	18	90	18	2.5	164	18	2.1	15.111	-B45	063-32	
79	21	2.2	8.3	16	35	21	79	21	2.2	142	21	1.8	17.378	-B45	063-32	
71	23	1.9	7.5	18	31	23	71	23	1.9	128	23	1.6	19.365	-B45	063-32	
70	23	3.5	7.4	18	31	23	70	23	3.5	127	24	2.9	19.556	-B110	063-32	
61	27	1.7	6.5	21	27	27	61	27	1.7	111	27	1.4	22.270	-B45	063-32	
61	27	3.5	6.4	21	27	27	61	27	3.5	110	27	2.9	22.489	-B110	063-32	
55	30	1.5	5.8	23	24	30	55	30	1.5	99	30	1.4	25.051	-B45	063-32	
54	30	2.9	5.8	23	24	30	54	30	2.9	98	30	2.5	25.185	-B110	063-32	
47	34	1.3	5.0	27	21	34	47	34	1.3	86	35	1.2	28.808	-B45	063-32	
47	35	2.9	5.0	27	21	35	47	35	2.9	86	35	2.5	28.963	-B110	063-32	
43	38	2.6	4.5	29	19	38	43	38	2.6	78	39	2.2	31.919	-B110	063-32	
42	39	1.2	4.4	30	18	39	42	39	1.2	76	39	1.1	32.593	-B45	063-32	
37	44	2.5	4.0	34	16	44	37	44	2.5	67	44	2.1	36.707	-B110	063-32	
37	45	2.4	3.9	35	16	45	37	45	2.4	66	45	2.0	37.400	-B110	063-32	
36	45	1.0	3.9	35	16	45	36	45	1.0	66	45	1.0	37.481	-B45	063-32	
34	48	2.1	3.6	37	15	48	34	48	2.1	62	48	2.0	40.000	-B110	063-32	
32	51	0.9	3.4	39	14	51	32	51	0.9	59	51	0.9	42.222	-B45	063-32	
32	52	2.9	3.4	40	14	52	32	52	2.9	57	52	2.8	43.267	-B240	063-32	
30	55	2.0	3.2	42	13	55	30	55	2.0	54	56	1.9	46.000	-B110	063-32	
28	58	1.9	3.0	44	13	58	28	58	1.9	51	58	1.8	48.167	-B110	063-32	
28	59	2.9	3.0	45	12	59	28	59	2.9	50	59	2.8	49.133	-B240	063-32	
26	63	2.6	2.8	48	11	63	26	63	2.6	47	64	2.4	52.510	-B240	063-32	
26	63	1.1	2.8	49	11	63	26	63	1.1	47	64	1.0	52.698	-B110	063-32	
23	71	2.6	2.4	55	10	71	23	71	2.6	42	72	2.4	59.630	-B240	063-32	

Selection tables, 4-pole motors

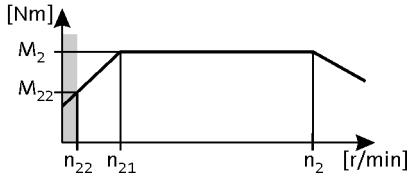

50 Hz: P_N = 0.18 kW
87 Hz: P_N = 0.33 kW

2-stage gearboxes

Mains operation 400 V, 50 Hz			Inverter operation 5 Hz -		- 20 Hz		- 50 Hz (1:10)			- 87 Hz (1:17.4)			i	Product		
n_2 [r/min]	M_2 [Nm]	c	n_{22} [r/min]	M_{22} [Nm]	n_{21} [r/min]	M_2 [Nm]	n_2 [r/min]	M_2 [Nm]	c	n_2 [r/min]	M_2 [Nm]	c		g500	MD□MA□□	
23	73	1.1	2.4	56	9.9	73	23	73	1.1	41	73	1.1	60.603	-B110	063-32	
22	73	1.5	2.4	56	9.8	73	22	73	1.5	41	74	1.5	61.045	-B110	063-32	
20	80	2.0	2.2	62	8.9	80	20	80	2.0	37	81	2.0	67.113	-B240	063-32	
18	91	2.0	1.9	70	7.9	91	18	91	2.0	33	92	2.0	76.213	-B240	063-32	
18	92	1.2	1.9	71	7.8	92	18	92	1.2	32	93	1.2	76.500	-B110	063-32	
14	121	0.9	1.4	93	6.0	121	14	121	0.9	25	122	0.9	100.786	-B110	063-32	

3-stage gearboxes

Mains operation 400 V, 50 Hz			Inverter operation 5 Hz -		- 20 Hz		- 50 Hz (1:10)			- 87 Hz (1:17.4)			i	Product		
n_2 [r/min]	M_2 [Nm]	c	n_{22} [r/min]	M_{22} [Nm]	n_{21} [r/min]	M_2 [Nm]	n_2 [r/min]	M_2 [Nm]	c	n_2 [r/min]	M_2 [Nm]	c		g500	MD□MA□□	
20	80	3.0	2.1	62	8.8	80	20	80	3.0	36	81	2.9	68.459	-B240	063-32	
18	91	2.7	1.9	70	7.7	91	18	91	2.7	32	92	2.5	77.741	-B240	063-32	
16	102	2.4	1.7	79	6.9	102	16	102	2.4	28	103	2.2	87.563	-B240	063-32	
14	116	2.1	1.5	89	6.0	116	14	116	2.1	25	117	2.0	99.437	-B240	063-32	
12	133	1.8	1.3	102	5.3	133	12	133	1.8	22	134	1.8	113.673	-B240	063-32	
11	151	1.6	1.1	116	4.6	151	11	151	1.6	19	152	1.6	129.087	-B240	063-32	
9.5	172	2.6	1.0	133	4.2	172	9.5	172	2.6	17	174	2.6	144.128	-B450	063-32	
9.4	170	1.4	1.0	131	4.1	170	9.4	170	1.4	17	172	1.4	145.674	-B240	063-32	
8.5	191	2.4	0.9	147	3.8	191	8.5	191	2.4	16	193	2.3	159.807	-B450	063-32	
8.3	193	1.2	0.9	149	3.6	193	8.3	193	1.2	15	195	1.2	165.426	-B240	063-32	
7.8	209	2.2	0.8	161	3.4	209	7.8	209	2.2	14	212	2.1	174.919	-B450	063-32	
7.2	220	1.1	0.8	169	3.2	220	7.2	220	1.1	13	222	1.1	188.442	-B240	063-32	
7.0	232	1.9	0.7	179	3.1	232	7.0	232	1.9	13	235	1.9	193.948	-B450	063-32	
6.4	250	1.0	0.7	192	2.8	250	6.4	250	1.0	12	252	1.0	213.994	-B240	063-32	
6.1	267	1.7	0.6	206	2.7	267	6.1	267	1.7	11	270	1.7	223.563	-B450	063-32	
5.6	286	0.8	0.6	220	2.4	286	5.6	286	0.8	10	289	0.8	245.178	-B240	063-32	
5.5	296	1.5	0.6	228	2.4	296	5.5	296	1.5	10	300	1.5	247.882	-B450	063-32	

Selection tables, 4-pole motors

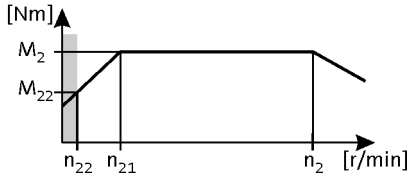

50 Hz: P_N = 0.25 kW
87 Hz: P_N = 0.45 kW

2-stage gearboxes

Mains operation 400 V, 50 Hz			Inverter operation 5 Hz -		- 20 Hz		- 50 Hz (1:10)			- 87 Hz (1:17.4)			i	Product		
n_2 [r/min]	M_2 [Nm]	c	n_{22} [r/min]	M_{22} [Nm]	n_{21} [r/min]	M_2 [Nm]	n_2 [r/min]	M_2 [Nm]	c	n_2 [r/min]	M_2 [Nm]	c		g500	MD□MA□□	
264	9.0	5.6	28	6.6	116	9.0	264	9.0	5.6	478	9.0	4.8	5.185	-B110	063-42	
253	9.0	4.4	27	6.9	111	9.0	253	9.0	4.4	458	9.0	3.7	5.411	-B45	063-42	
230	10	5.6	24	7.6	101	10	230	10	5.6	416	10	4.8	5.963	-B110	063-42	
220	10	3.9	23	7.9	96	10	220	10	3.9	399	10	3.3	6.222	-B45	063-42	
193	12	3.7	20	9.1	84	12	193	12	3.7	349	12	3.1	7.111	-B45	063-42	
193	12	5.6	20	9.1	84	12	193	12	5.6	349	12	4.8	7.111	-B110	063-42	
168	14	3.3	18	10	73	13	168	14	3.3	303	13	2.8	8.178	-B45	063-42	
168	14	5.6	18	10	73	13	168	14	5.6	303	13	4.8	8.178	-B110	063-42	
151	15	3.0	16	12	66	15	151	15	3.0	273	15	2.5	9.101	-B45	063-42	
151	15	5.2	16	12	66	15	151	15	5.2	273	15	4.4	9.101	-B110	063-42	
131	17	2.6	14	13	57	17	131	17	2.6	237	17	2.2	10.466	-B45	063-42	
131	17	5.1	14	13	57	17	131	17	5.1	237	17	4.4	10.466	-B110	063-42	
120	19	4.8	13	15	52	19	120	19	4.8	217	19	4.0	11.449	-B110	063-42	
118	19	2.3	13	15	52	19	118	19	2.3	213	19	2.0	11.640	-B45	063-42	
108	21	4.3	11	16	47	21	108	21	4.3	195	21	3.6	12.698	-B110	063-42	
102	22	2.0	11	17	45	22	102	22	2.0	185	22	1.7	13.386	-B45	063-42	
94	24	3.7	9.9	19	41	24	94	24	3.7	170	24	3.2	14.603	-B110	063-42	
91	25	5.6	9.7	19	40	25	91	25	5.6	165	25	4.8	15.008	-B240	063-42	
91	25	1.8	9.6	19	40	25	91	25	1.8	164	25	1.5	15.111	-B45	063-42	
88	26	3.6	9.3	20	39	26	88	26	3.6	159	26	3.0	15.556	-B110	063-42	
81	28	5.2	8.6	22	36	28	81	28	5.2	147	28	4.4	16.857	-B240	063-42	
79	29	1.6	8.3	22	35	29	79	29	1.6	143	29	1.3	17.378	-B45	063-42	
77	30	3.2	8.1	23	34	29	77	30	3.2	139	29	2.8	17.889	-B110	063-42	
72	32	5.2	7.6	24	31	32	72	32	5.2	130	32	4.4	19.143	-B240	063-42	
71	32	1.4	7.5	25	31	32	71	32	1.4	128	32	1.2	19.365	-B45	063-42	
70	32	3.1	7.4	25	31	32	70	32	3.1	127	32	2.6	19.556	-B110	063-42	
62	37	1.2	6.5	28	27	37	62	37	1.2	111	37	1.0	22.270	-B45	063-42	
61	37	2.8	6.4	29	27	37	61	37	2.8	110	37	2.4	22.489	-B110	063-42	
55	41	1.1	5.8	32	24	41	55	41	1.1	99	41	1.1	25.051	-B45	063-42	
54	42	2.6	5.8	32	24	41	54	42	2.6	99	41	2.2	25.185	-B110	063-42	
51	44	4.3	5.4	34	22	44	51	44	4.3	92	44	3.7	26.878	-B240	063-42	
48	48	0.9	5.0	37	21	47	48	48	0.9	86	47	0.9	28.808	-B45	063-42	
47	48	2.3	5.0	37	21	48	47	48	2.3	86	48	2.0	28.963	-B110	063-42	
45	51	4.3	4.8	39	20	50	45	51	4.3	81	50	3.7	30.522	-B240	063-42	
43	53	2.0	4.5	41	19	53	43	53	2.0	78	53	1.7	31.919	-B110	063-42	

Selection tables, 4-pole motors

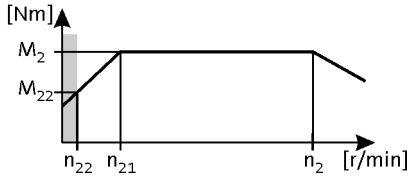

50 Hz: P_N = 0.25 kW
87 Hz: P_N = 0.45 kW

2-stage gearboxes

Mains operation 400 V, 50 Hz			Inverter operation 5 Hz -		- 20 Hz		- 50 Hz (1:10)			- 87 Hz (1:17.4)			i	Product		
n_2 [r/min]	M_2 [Nm]	c	n_{22} [r/min]	M_{22} [Nm]	n_{21} [r/min]	M_2 [Nm]	n_2 [r/min]	M_2 [Nm]	c	n_2 [r/min]	M_2 [Nm]	c		g500	MD□MA□□	
42	54	0.8	4.4	42	18	54	42	54	0.8	76	54	0.8	32.593	-B45	063-42	
41	55	3.7	4.3	43	18	55	41	55	3.7	74	55	3.1	33.433	-B240	063-42	
37	61	1.8	4.0	47	16	60	37	61	1.8	68	60	1.5	36.707	-B110	063-42	
37	62	1.7	3.9	48	16	62	37	62	1.7	66	62	1.5	37.400	-B110	063-42	
36	63	3.7	3.8	48	16	62	36	63	3.7	65	62	3.1	37.967	-B240	063-42	
34	66	1.2	3.6	51	15	66	34	66	1.2	62	66	1.2	40.000	-B110	063-42	
32	72	3.3	3.4	55	14	71	32	72	3.3	57	71	3.2	43.267	-B240	063-42	
30	76	1.2	3.2	59	13	76	30	76	1.2	54	76	1.2	46.000	-B110	063-42	
28	80	1.4	3.0	61	13	79	28	80	1.4	52	79	1.3	48.167	-B110	063-42	
28	81	3.0	3.0	63	12	81	28	81	3.0	51	81	2.9	49.133	-B240	063-42	
26	87	2.7	2.8	67	11	86	26	87	2.7	47	86	2.6	52.510	-B240	063-42	
23	99	2.4	2.4	76	10	98	23	99	2.4	42	98	2.4	59.630	-B240	063-42	
22	101	1.1	2.4	78	9.8	100	22	101	1.1	41	100	1.1	61.045	-B110	063-42	
20	111	1.4	2.2	86	8.9	110	20	111	1.4	37	110	1.4	67.113	-B240	063-42	
18	126	1.4	1.9	97	7.9	125	18	126	1.4	33	125	1.4	76.213	-B240	063-42	
18	127	0.9	1.9	98	7.8	126	18	127	0.9	32	126	0.9	76.500	-B110	063-42	

3-stage gearboxes

Mains operation 400 V, 50 Hz			Inverter operation 5 Hz -		- 20 Hz		- 50 Hz (1:10)			- 87 Hz (1:17.4)			i	Product		
n_2 [r/min]	M_2 [Nm]	c	n_{22} [r/min]	M_{22} [Nm]	n_{21} [r/min]	M_2 [Nm]	n_2 [r/min]	M_2 [Nm]	c	n_2 [r/min]	M_2 [Nm]	c		g500	MD□MA□□	
77	30	5.6	8.1	23	34	29	77	30	5.6	139	29	4.8	17.885	-B450	063-42	
69	33	5.6	7.3	25	30	33	69	33	5.6	125	33	4.8	19.831	-B450	063-42	
60	38	5.2	6.4	29	26	38	60	38	5.2	109	38	4.4	22.813	-B450	063-42	
54	42	5.2	5.7	32	24	42	54	42	5.2	98	42	4.4	25.294	-B450	063-42	
38	60	4.3	4.0	46	17	60	38	60	4.3	68	60	3.7	36.373	-B450	063-42	
34	67	4.3	3.6	51	15	66	34	67	4.3	62	66	4.2	40.330	-B450	063-42	
30	75	3.7	3.2	58	13	74	30	75	3.7	55	74	3.5	45.245	-B450	063-42	
27	83	3.7	2.9	64	12	83	27	83	3.7	49	83	3.5	50.167	-B450	063-42	
24	93	4.8	2.6	72	11	92	24	93	4.8	44	92	4.7	56.154	-B450	063-42	
22	103	4.4	2.3	79	9.6	102	22	103	4.4	40	102	4.2	62.262	-B450	063-42	
20	112	3.7	2.1	86	8.9	111	20	112	3.7	37	111	3.5	67.513	-B600	063-42	
20	110	2.2	2.1	85	8.8	110	20	110	2.2	36	110	2.1	68.459	-B240	063-42	
18	125	1.9	1.9	97	7.7	125	18	125	1.9	32	125	1.9	77.741	-B240	063-42	
17	136	3.2	1.8	104	7.3	135	17	136	3.2	30	135	3.1	81.937	-B600	063-42	
16	141	1.7	1.7	109	6.9	140	16	141	1.7	28	140	1.6	87.563	-B240	063-42	
15	148	3.0	1.6	114	6.7	147	15	148	3.0	28	147	2.9	89.534	-B450	063-42	
14	164	2.7	1.5	127	6.0	163	14	164	2.7	25	163	2.7	99.274	-B450	063-42	
14	160	1.5	1.5	124	6.0	160	14	160	1.5	25	160	1.5	99.437	-B240	063-42	
12	184	2.4	1.3	142	5.4	183	12	184	2.4	22	183	2.5	111.372	-B450	063-42	

Selection tables, 4-pole motors

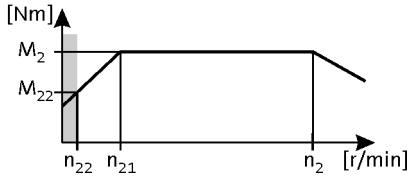

50 Hz: P_N = 0.25 kW
87 Hz: P_N = 0.45 kW

3-stage gearboxes

Mains operation 400 V, 50 Hz			Inverter operation 5 Hz -		- 20 Hz		- 50 Hz (1:10)			- 87 Hz (1:17.4)			i	Product		
n_2 [r/min]	M_2 [Nm]	c	n_{22} [r/min]	M_{22} [Nm]	n_{21} [r/min]	M_2 [Nm]	n_2 [r/min]	M_2 [Nm]	c	n_2 [r/min]	M_2 [Nm]	c		g500	MD□MA□□	
12	183	1.3	1.3	141	5.3	182	12	183	1.3	22	182	1.3	113.673	-B240	063-42	
12	192	3.1	1.2	148	5.2	191	12	192	3.1	21	191	3.1	116.175	-B600	063-42	
11	204	2.2	1.2	157	4.9	203	11	204	2.2	20	203	2.2	123.487	-B450	063-42	
11	208	1.2	1.1	160	4.6	207	11	208	1.2	19	207	1.2	129.087	-B240	063-42	
9.7	233	2.6	1.0	180	4.3	232	9.7	233	2.6	18	232	2.6	140.995	-B600	063-42	
9.5	239	1.9	1.0	184	4.2	237	9.5	239	1.9	17	237	1.9	144.128	-B450	063-42	
9.4	235	1.0	1.0	181	4.1	234	9.4	235	1.0	17	234	1.0	145.674	-B240	063-42	
9.3	245	3.4	1.0	189	4.1	244	9.3	245	3.4	17	244	3.4	148.000	-B820	063-42	
8.6	265	1.7	0.9	204	3.8	263	8.6	265	1.7	16	263	1.7	159.807	-B450	063-42	
8.4	271	2.2	0.9	209	3.7	270	8.4	271	2.2	15	270	2.2	163.810	-B600	063-42	
8.3	267	0.9	0.9	206	3.6	265	8.3	267	0.9	15	265	0.9	165.426	-B240	063-42	
8.3	274	3.0	0.9	211	3.6	272	8.3	274	3.0	15	272	3.0	165.467	-B820	063-42	
7.8	290	1.6	0.8	223	3.4	288	7.8	290	1.6	14	288	1.6	174.919	-B450	063-42	
7.7	295	2.0	0.8	227	3.4	293	7.7	295	2.0	14	293	2.1	178.224	-B600	063-42	
7.6	297	2.8	0.8	229	3.3	296	7.6	297	2.8	14	296	2.8	179.618	-B820	063-42	
7.1	321	1.4	0.7	247	3.1	319	7.1	321	1.4	13	319	1.4	193.948	-B450	063-42	
6.9	329	1.8	0.7	253	3.0	327	6.9	329	1.8	13	327	1.8	198.805	-B600	063-42	
6.8	332	2.5	0.7	256	3.0	331	6.8	332	2.5	12	331	2.5	200.816	-B820	063-42	
6.1	370	1.2	0.6	285	2.7	368	6.1	370	1.2	11	368	1.2	223.563	-B450	063-42	
6.0	376	2.2	0.6	289	2.6	374	6.0	376	2.2	11	374	2.2	227.045	-B820	063-42	
5.5	410	1.1	0.6	316	2.4	408	5.5	410	1.1	10	408	1.1	247.882	-B450	063-42	
5.5	416	1.4	0.6	320	2.4	414	5.5	416	1.4	9.9	414	1.5	251.299	-B600	063-42	
5.4	420	2.0	0.6	324	2.4	418	5.4	420	2.0	9.8	418	2.0	253.841	-B820	063-42	

Selection tables, 4-pole motors

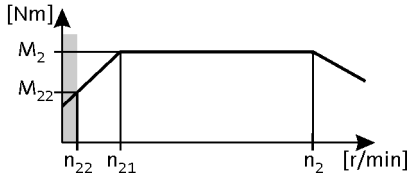

50 Hz: P_N = 0.37 kW
87 Hz: P_N = 0.66 kW

2-stage gearboxes

Mains operation 400 V, 50 Hz			Inverter operation 5 Hz -		- 20 Hz		- 50 Hz (1:10)			- 87 Hz (1:17.4)			i	Product		
n_2 [r/min]	M_2 [Nm]	c	n_{22} [r/min]	M_{22} [Nm]	n_{21} [r/min]	M_2 [Nm]	n_2 [r/min]	M_2 [Nm]	c	n_2 [r/min]	M_2 [Nm]	c		g500	MD□MA□□	
272	12	4.9	28	9.5	116	12	272	12	4.9	486	12	4.1	5.185	-B110	071-32	
261	13	3.0	27	9.9	111	13	261	13	3.0	466	13	2.6	5.411	-B45	071-32	
237	14	4.9	24	11	101	14	237	14	4.9	423	14	4.1	5.963	-B110	071-32	
227	15	2.7	23	11	96	15	227	15	2.7	405	15	2.3	6.222	-B45	071-32	
198	17	2.5	20	13	84	17	198	17	2.5	354	17	2.1	7.111	-B45	071-32	
198	17	4.6	20	13	84	17	198	17	4.6	354	17	3.8	7.111	-B110	071-32	
172	19	2.3	18	15	73	19	172	19	2.3	308	19	1.9	8.178	-B45	071-32	
172	19	4.2	18	15	73	19	172	19	4.2	308	19	3.5	8.178	-B110	071-32	
155	22	2.1	16	17	66	22	155	22	2.1	277	22	1.8	9.101	-B45	071-32	
155	22	3.9	16	17	66	22	155	22	3.9	277	22	3.3	9.101	-B110	071-32	
135	25	1.8	14	19	57	25	135	25	1.8	241	25	1.5	10.466	-B45	071-32	
135	25	3.6	14	19	57	25	135	25	3.6	241	25	3.0	10.466	-B110	071-32	
123	27	3.3	13	21	52	27	123	27	3.3	220	27	2.8	11.449	-B110	071-32	
121	28	1.6	13	21	52	28	121	28	1.6	217	28	1.4	11.640	-B45	071-32	
111	30	3.0	11	23	47	30	111	30	3.0	198	30	2.5	12.698	-B110	071-32	
105	32	1.4	11	25	45	32	105	32	1.4	188	32	1.2	13.386	-B45	071-32	
97	35	2.6	9.9	27	41	35	97	35	2.6	173	35	2.2	14.603	-B110	071-32	
94	36	4.9	9.7	28	40	36	94	36	4.9	168	36	4.1	15.008	-B240	071-32	
93	36	1.3	9.6	28	40	36	93	36	1.3	167	36	1.1	15.111	-B45	071-32	
91	37	2.5	9.3	29	39	37	91	37	2.5	162	37	2.1	15.556	-B110	071-32	
84	40	4.5	8.6	31	36	40	84	40	4.5	150	40	3.8	16.857	-B240	071-32	
81	41	1.1	8.3	32	35	41	81	41	1.1	145	41	0.9	17.378	-B45	071-32	
79	43	2.3	8.1	33	34	43	79	43	2.3	141	43	1.9	17.889	-B110	071-32	
74	46	4.5	7.6	35	31	45	74	46	4.5	132	45	3.8	19.143	-B240	071-32	
73	46	1.0	7.5	36	31	46	73	46	1.0	130	46	0.8	19.365	-B45	071-32	
72	47	2.2	7.4	36	31	46	72	47	2.2	129	46	1.8	19.556	-B110	071-32	
63	53	0.9	6.5	41	27	53	63	53	0.9				22.270	-B45	071-32	
63	54	1.9	6.4	41	27	53	63	54	1.9	112	53	1.6	22.489	-B110	071-32	
56	60	1.8	5.8	46	24	60	56	60	1.8	100	60	1.5	25.185	-B110	071-32	
53	64	3.7	5.4	49	22	64	53	64	3.7	94	64	3.2	26.878	-B240	071-32	
49	69	1.6	5.0	53	21	69	49	69	1.6	87	69	1.3	28.963	-B110	071-32	
46	73	3.3	4.8	56	20	73	46	73	3.3	83	73	2.8	30.522	-B240	071-32	
44	76	1.4	4.5	59	19	76	44	76	1.4	79	76	1.2	31.919	-B110	071-32	
42	80	3.0	4.3	61	18	79	42	80	3.0	75	79	2.5	33.433	-B240	071-32	
38	87	1.3	4.0	67	16	87	38	87	1.3	69	87	1.1	36.707	-B110	071-32	

Selection tables, 4-pole motors

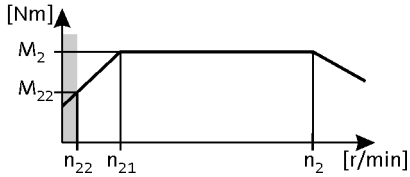

50 Hz: P_N = 0.37 kW
87 Hz: P_N = 0.66 kW

2-stage gearboxes

Mains operation 400 V, 50 Hz			Inverter operation 5 Hz -		- 20 Hz		- 50 Hz (1:10)			- 87 Hz (1:17.4)			i	Product		
n_2 [r/min]	M_2 [Nm]	c	n_{22} [r/min]	M_{22} [Nm]	n_{21} [r/min]	M_2 [Nm]	n_2 [r/min]	M_2 [Nm]	c	n_2 [r/min]	M_2 [Nm]	c		g500	MD□MA□□	
38	89	1.2	3.9	69	16	89	38	89	1.2	67	89	1.0	37.400	-B110	071-32	
37	90	2.7	3.8	70	16	90	37	90	2.7	66	90	2.2	37.967	-B240	071-32	
35	95	1.1	3.6	73	15	95	35	95	1.1	63	95	1.0	40.000	-B110	071-32	
33	103	2.3	3.4	79	14	103	33	103	2.3	58	103	2.2	43.267	-B240	071-32	
31	110	1.0	3.2	84	13	109	31	110	1.0	55	109	1.0	46.000	-B110	071-32	
29	115	1.0	3.0	88	13	114	29	115	1.0	52	114	0.9	48.167	-B110	071-32	
29	117	2.1	3.0	90	12	117	29	117	2.1	51	117	2.0	49.133	-B240	071-32	
27	125	1.9	2.8	96	11	125	27	125	1.9	48	125	1.8	52.510	-B240	071-32	
24	142	1.7	2.4	109	10	142	24	142	1.7	42	142	1.6	59.630	-B240	071-32	
21	160	1.1	2.2	123	8.9	159	21	160	1.1	38	159	1.1	67.113	-B240	071-32	
19	181	1.1	1.9	140	7.9	181	19	181	1.1	33	181	1.1	76.213	-B240	071-32	

3-stage gearboxes

Mains operation 400 V, 50 Hz			Inverter operation 5 Hz -		- 20 Hz		- 50 Hz (1:10)			- 87 Hz (1:17.4)			i	Product		
n_2 [r/min]	M_2 [Nm]	c	n_{22} [r/min]	M_{22} [Nm]	n_{21} [r/min]	M_2 [Nm]	n_2 [r/min]	M_2 [Nm]	c	n_2 [r/min]	M_2 [Nm]	c		g500	MD□MA□□	
79	43	4.9	8.1	33	34	42	79	43	4.9	141	42	4.1	17.885	-B450	071-32	
71	47	4.9	7.3	36	30	47	71	47	4.9	127	47	4.1	19.831	-B450	071-32	
62	54	4.5	6.4	42	26	54	62	54	4.5	111	54	3.8	22.813	-B450	071-32	
56	60	4.5	5.7	46	24	60	56	60	4.5	100	60	3.8	25.294	-B450	071-32	
39	87	3.7	4.0	67	17	86	39	87	3.7	69	86	3.2	36.373	-B450	071-32	
35	96	3.7	3.6	74	15	96	35	96	3.7	63	96	3.6	40.330	-B450	071-32	
31	108	3.2	3.2	83	13	107	31	108	3.2	56	107	3.0	45.245	-B450	071-32	
28	119	3.2	2.9	92	12	119	28	119	3.2	50	119	3.0	50.167	-B450	071-32	
25	134	3.4	2.6	103	11	133	25	134	3.4	45	133	3.2	56.154	-B450	071-32	
23	148	3.0	2.3	114	9.6	148	23	148	3.0	41	148	2.9	62.262	-B450	071-32	
21	161	3.2	2.1	124	8.9	160	21	161	3.2	37	160	3.0	67.513	-B600	071-32	
21	159	1.5	2.1	122	8.8	159	21	159	1.5	37	159	1.5	68.459	-B240	071-32	
18	180	1.3	1.9	139	7.7	180	18	180	1.3	32	180	1.3	77.741	-B240	071-32	
17	195	2.8	1.8	150	7.3	195	17	195	2.8	31	195	2.7	81.937	-B600	071-32	
16	203	1.2	1.7	157	6.9	203	16	203	1.2	29	203	1.1	87.563	-B240	071-32	
16	213	2.1	1.6	164	6.7	213	16	213	2.1	28	213	2.0	89.534	-B450	071-32	
14	236	1.9	1.5	182	6.0	236	14	236	1.9	25	236	1.8	99.274	-B450	071-32	
14	231	1.0	1.5	178	6.0	230	14	231	1.0	25	230	1.0	99.437	-B240	071-32	
13	265	1.7	1.3	204	5.4	265	13	265	1.7	23	265	1.7	111.372	-B450	071-32	
12	264	0.9	1.3	203	5.3	263	12	264	0.9	22	263	0.9	113.673	-B240	071-32	
12	277	2.2	1.2	213	5.2	276	12	277	2.2	22	276	2.2	116.175	-B600	071-32	
11	294	1.5	1.2	226	4.9	293	11	294	1.5	20	293	1.5	123.487	-B450	071-32	
10	336	1.8	1.0	258	4.3	335	10	336	1.8	18	335	1.8	140.995	-B600	071-32	
9.8	343	1.3	1.0	264	4.2	342	9.8	343	1.3	18	342	1.3	144.128	-B450	071-32	

Selection tables, 4-pole motors

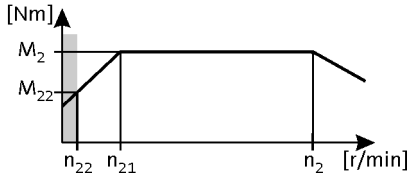

50 Hz: P_N = 0.37 kW
87 Hz: P_N = 0.66 kW

3-stage gearboxes

Mains operation 400 V, 50 Hz			Inverter operation 5 Hz -		- 20 Hz		- 50 Hz (1:10)			- 87 Hz (1:17.4)			i	Product		
n_2 [r/min]	M_2 [Nm]	c	n_{22} [r/min]	M_{22} [Nm]	n_{21} [r/min]	M_2 [Nm]	n_2 [r/min]	M_2 [Nm]	c	n_2 [r/min]	M_2 [Nm]	c		g500	MD□MA□□	
9.5	352	2.3	1.0	271	4.1	352	9.5	352	2.3	17	352	2.3	148.000	-B820	071-32	
8.8	380	1.2	0.9	293	3.8	380	8.8	380	1.2	16	380	1.2	159.807	-B450	071-32	
8.6	390	1.5	0.9	300	3.7	389	8.6	390	1.5	15	389	1.5	163.810	-B600	071-32	
8.5	394	2.1	0.9	303	3.6	393	8.5	394	2.1	15	393	2.1	165.467	-B820	071-32	
8.1	416	1.1	0.8	321	3.4	416	8.1	416	1.1	14	416	1.1	174.919	-B450	071-32	
7.9	424	1.4	0.8	327	3.4	423	7.9	424	1.4	14	423	1.4	178.224	-B600	071-32	
7.8	428	1.9	0.8	329	3.3	427	7.8	428	1.9	14	427	1.9	179.618	-B820	071-32	
7.3	462	1.0	0.7	356	3.1	461	7.3	462	1.0	13	461	1.0	193.948	-B450	071-32	
7.1	473	1.3	0.7	364	3.0	472	7.1	473	1.3	13	472	1.3	198.805	-B600	071-32	
7.0	478	1.7	0.7	368	3.0	477	7.0	478	1.7	13	477	1.7	200.816	-B820	071-32	
6.3	532	0.9	0.6	410	2.7	531	6.3	532	0.9	11	531	0.9	223.563	-B450	071-32	
6.2	540	1.5	0.6	416	2.6	539	6.2	540	1.5	11	539	1.5	227.045	-B820	071-32	
5.6	598	1.0	0.6	461	2.4	597	5.6	598	1.0	10	597	1.0	251.299	-B600	071-32	
5.6	604	1.4	0.6	465	2.4	603	5.6	604	1.4	9.9	603	1.4	253.841	-B820	071-32	

Selection tables, 4-pole motors

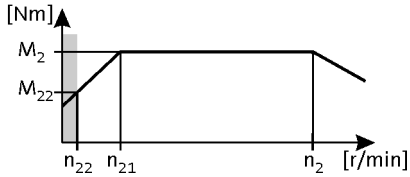

50 Hz: P_N = 0.55 kW
87 Hz: P_N = 1.0 kW

2-stage gearboxes

Mains operation 400 V, 50 Hz			Inverter operation 5 Hz -		- 20 Hz		- 50 Hz (1:10)			- 87 Hz (1:17.4)			i	Product		
n_2 [r/min]	M_2 [Nm]	c	n_{22} [r/min]	M_{22} [Nm]	n_{21} [r/min]	M_2 [Nm]	n_2 [r/min]	M_2 [Nm]	c	n_2 [r/min]	M_2 [Nm]	c		g500	MD□MA□□	
394	13	5.1	41	9.7	168	13	394	13	5.1	706	13	4.3	3.565	-B240	071-42	
271	18	3.8	28	14	116	18	271	18	3.8	485	19	3.1	5.185	-B110	071-42	
260	19	2.0	27	15	111	19	260	19	2.0	465	20	1.7	5.411	-B45	071-42	
236	21	3.4	24	16	101	21	236	21	3.4	422	22	2.8	5.963	-B110	071-42	
226	22	1.8	23	17	96	22	226	22	1.8	404	22	1.5	6.222	-B45	071-42	
225	22	4.5	23	17	96	22	225	22	4.5	402	23	3.7	6.257	-B240	071-42	
204	24	5.1	21	19	87	24	204	24	5.1	365	25	4.3	6.883	-B240	071-42	
198	25	1.7	20	19	84	25	198	25	1.7	354	26	1.4	7.111	-B45	071-42	
198	25	3.1	20	19	84	25	198	25	3.1	354	26	2.5	7.111	-B110	071-42	
180	28	5.1	19	21	77	28	180	28	5.1	322	28	4.3	7.817	-B240	071-42	
172	29	1.5	18	22	73	29	172	29	1.5	308	29	1.3	8.178	-B45	071-42	
172	29	2.8	18	22	73	29	172	29	2.8	308	29	2.3	8.178	-B110	071-42	
154	32	1.4	16	25	66	32	154	32	1.4	276	33	1.2	9.101	-B45	071-42	
154	32	2.6	16	25	66	32	154	32	2.6	276	33	2.2	9.101	-B110	071-42	
134	37	1.2	14	29	57	37	134	37	1.2	240	38	1.0	10.466	-B45	071-42	
134	37	2.4	14	29	57	37	134	37	2.4	240	38	2.0	10.466	-B110	071-42	
123	41	2.2	13	31	52	41	123	41	2.2	220	41	1.8	11.449	-B110	071-42	
121	41	1.1	13	32	52	41	121	41	1.1	216	42	0.9	11.640	-B45	071-42	
116	43	4.5	12	33	50	43	116	43	4.5	208	44	3.7	12.081	-B240	071-42	
111	45	2.0	11	35	47	45	111	45	2.0	198	46	1.7	12.698	-B110	071-42	
105	48	1.0	11	37	45	48	105	48	1.0				13.386	-B45	071-42	
102	49	4.5	11	38	44	49	102	49	4.5	183	49	3.7	13.719	-B240	071-42	
96	52	1.7	9.9	40	41	52	96	52	1.7	172	53	1.4	14.603	-B110	071-42	
94	53	4.2	9.7	41	40	53	94	53	4.2	168	54	3.5	15.008	-B240	071-42	
93	54	0.8	9.6	41	40	54	93	54	0.8				15.111	-B45	071-42	
90	55	1.7	9.3	43	39	55	90	55	1.7	162	56	1.4	15.556	-B110	071-42	
83	60	4.0	8.6	46	36	60	83	60	4.0	149	61	3.3	16.857	-B240	071-42	
79	64	1.5	8.1	49	34	64	79	64	1.5	141	65	1.3	17.889	-B110	071-42	
73	68	3.5	7.6	52	31	68	73	68	3.5	131	69	2.9	19.143	-B240	071-42	
72	69	1.4	7.4	54	31	69	72	69	1.4	129	71	1.2	19.556	-B110	071-42	
68	73	3.3	7.0	57	29	73	68	73	3.3	122	74	2.7	20.650	-B240	071-42	
63	80	1.3	6.4	62	27	80	63	80	1.3	112	81	1.1	22.489	-B110	071-42	
60	83	2.9	6.2	64	26	83	60	83	2.9	107	85	2.4	23.450	-B240	071-42	
56	89	1.2	5.8	69	24	89	56	89	1.2	100	91	1.0	25.185	-B110	071-42	
52	95	2.5	5.4	74	22	95	52	95	2.5	94	97	2.1	26.878	-B240	071-42	

Selection tables, 4-pole motors

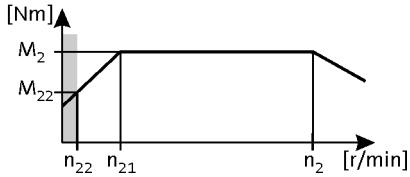

50 Hz: P_N = 0.55 kW
87 Hz: P_N = 1.0 kW

2-stage gearboxes

Mains operation 400 V, 50 Hz			Inverter operation 5 Hz -		- 20 Hz		- 50 Hz (1:10)			- 87 Hz (1:17.4)			i	Product		
n_2 [r/min]	M_2 [Nm]	c	n_{22} [r/min]	M_{22} [Nm]	n_{21} [r/min]	M_2 [Nm]	n_2 [r/min]	M_2 [Nm]	c	n_2 [r/min]	M_2 [Nm]	c		g500	MD□MA□□	
49	103	1.1	5.0	79	21	103	49	103	1.1	87	104	0.9	28.963	-B110	071-42	
46	108	2.2	4.8	84	20	108	46	108	2.2	82	110	1.8	30.522	-B240	071-42	
42	119	2.0	4.3	91	18	119	42	119	2.0	75	121	1.7	33.433	-B240	071-42	
37	135	1.8	3.8	104	16	135	37	135	1.8	66	137	1.5	37.967	-B240	071-42	
33	154	1.6	3.4	118	14	154	33	154	1.6	58	156	1.5	43.267	-B240	071-42	
29	174	1.4	3.0	134	12	174	29	174	1.4	51	177	1.3	49.133	-B240	071-42	
27	186	1.3	2.8	144	11	186	27	186	1.3	48	189	1.2	52.510	-B240	071-42	
24	212	1.1	2.4	163	10	212	24	212	1.1	42	215	1.1	59.630	-B240	071-42	

3-stage gearboxes

Mains operation 400 V, 50 Hz			Inverter operation 5 Hz -		- 20 Hz		- 50 Hz (1:10)			- 87 Hz (1:17.4)			i	Product		
n_2 [r/min]	M_2 [Nm]	c	n_{22} [r/min]	M_{22} [Nm]	n_{21} [r/min]	M_2 [Nm]	n_2 [r/min]	M_2 [Nm]	c	n_2 [r/min]	M_2 [Nm]	c		g500	MD□MA□□	
281	18	5.1	29	14	120	18	281	18	5.1	503	18	4.3	5.002	-B450	071-42	
151	33	5.1	16	26	64	33	151	33	5.1	270	34	4.3	9.315	-B450	071-42	
136	37	5.1	14	28	58	37	136	37	5.1	244	37	4.3	10.328	-B450	071-42	
116	43	4.5	12	33	49	43	116	43	4.5	207	44	3.7	12.143	-B820	071-42	
86	58	4.5	8.9	45	37	58	86	58	4.5	154	59	3.7	16.349	-B450	071-42	
79	64	4.5	8.1	49	34	64	79	64	4.5	141	65	3.8	17.885	-B450	071-42	
75	66	4.5	7.8	51	32	66	75	66	4.5	135	67	3.7	18.655	-B820	071-42	
71	70	4.5	7.3	54	30	70	71	70	4.5	127	72	3.8	19.831	-B450	071-42	
67	74	4.5	7.0	57	29	74	67	74	4.5	121	75	3.7	20.857	-B820	071-42	
62	81	4.2	6.4	62	26	81	62	81	4.2	110	82	3.5	22.813	-B450	071-42	
56	90	4.2	5.7	69	24	90	56	90	4.2	99	91	3.5	25.294	-B450	071-42	
50	99	3.7	5.2	76	22	101	50	99	3.7	90	101	3.1	27.945	-B450	071-42	
47	106	3.7	4.9	81	20	106	47	106	3.7	85	107	3.1	29.744	-B600	071-42	
47	106	3.7	4.9	81	20	106	47	106	3.7	85	107	3.1	29.745	-B820	071-42	
45	110	3.7	4.7	85	19	110	45	110	3.7	81	112	3.1	30.985	-B450	071-42	
39	129	3.4	4.0	99	17	129	39	129	3.4	69	131	2.8	36.373	-B450	071-42	
38	131	3.2	3.9	101	16	131	38	131	3.2	68	133	2.6	36.999	-B600	071-42	
38	131	3.2	3.9	101	16	131	38	131	3.2	68	133	2.6	37.000	-B820	071-42	
35	143	3.1	3.6	110	15	143	35	143	3.1	62	145	3.0	40.330	-B450	071-42	
34	149	3.7	3.5	115	14	149	34	149	3.7	60	151	3.5	41.940	-B600	071-42	
31	161	2.8	3.2	124	13	161	31	161	2.8	56	163	2.6	45.245	-B450	071-42	
28	178	2.5	2.9	137	12	178	28	178	2.5	50	181	2.4	50.167	-B450	071-42	
25	199	2.3	2.6	154	11	199	25	199	2.3	45	203	2.1	56.154	-B450	071-42	
24	205	4.0	2.5	158	10	205	24	205	4.0	44	208	3.8	57.662	-B820	071-42	
23	221	2.0	2.3	170	9.6	221	23	221	2.0	40	225	1.9	62.262	-B450	071-42	
22	227	2.7	2.3	175	9.4	227	22	227	2.7	39	230	2.5	63.822	-B600	071-42	
22	229	3.6	2.2	176	9.3	229	22	229	3.6	39	233	3.4	64.468	-B820	071-42	

Selection tables, 4-pole motors

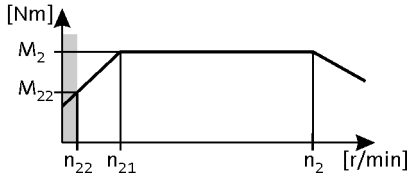

50 Hz: P_N = 0.55 kW
87 Hz: P_N = 1.0 kW

3-stage gearboxes

Mains operation 400 V, 50 Hz			Inverter operation 5 Hz -		- 20 Hz		- 50 Hz (1:10)			- 87 Hz (1:17.4)			i	Product		
n_2 [r/min]	M_2 [Nm]	c	n_{22} [r/min]	M_{22} [Nm]	n_{21} [r/min]	M_2 [Nm]	n_2 [r/min]	M_2 [Nm]	c	n_2 [r/min]	M_2 [Nm]	c		g500	MD□MA□□	
21	240	2.5	2.1	185	8.9	240	21	240	2.5	37	243	2.4	67.513	-B600	071-42	
21	237	1.0	2.1	183	8.8	237	21	237	1.0	37	241	1.0	68.459	-B240	071-42	
20	244	1.8	2.1	188	8.7	244	20	244	1.8	37	248	1.7	68.788	-B450	071-42	
20	256	2.3	2.0	197	8.3	256	20	256	2.3	35	260	2.2	72.170	-B600	071-42	
19	266	3.2	1.9	205	8.0	266	19	266	3.2	34	270	3.0	74.963	-B1500	071-42	
18	271	1.7	1.9	209	7.9	271	18	271	1.7	33	275	1.6	76.271	-B450	071-42	
18	269	0.9	1.9	207	7.7	269	18	269	0.9	32	273	0.8	77.741	-B240	071-42	
17	291	2.1	1.8	224	7.3	291	17	291	2.1	31	296	1.9	81.937	-B600	071-42	
17	294	2.8	1.8	226	7.2	294	17	294	2.8	30	298	2.6	82.762	-B1500	071-42	
16	318	1.4	1.6	245	6.7	318	16	318	1.4	28	323	1.3	89.534	-B450	071-42	
16	319	1.9	1.6	245	6.7	319	16	319	1.9	28	324	1.8	89.772	-B600	071-42	
15	323	2.8	1.6	249	6.6	323	15	323	2.8	28	328	2.6	90.978	-B1500	071-42	
15	326	2.5	1.6	251	6.5	326	15	326	2.5	27	332	2.4	91.939	-B820	071-42	
14	352	1.3	1.5	271	6.0	352	14	352	1.3	25	358	1.2	99.274	-B450	071-42	
14	361	1.7	1.4	278	5.9	361	14	361	1.7	25	367	1.6	101.760	-B600	071-42	
14	365	2.3	1.4	281	5.8	365	14	365	2.3	25	371	2.1	102.790	-B820	071-42	
13	395	1.1	1.3	305	5.4	395	13	395	1.1	23	402	1.1	111.372	-B450	071-42	
12	406	2.0	1.3	313	5.2	406	12	406	2.0	22	412	2.0	114.364	-B820	071-42	
12	413	1.5	1.2	318	5.2	413	12	413	1.5	22	419	1.4	116.175	-B600	071-42	
11	438	1.0	1.2	338	4.9	438	11	438	1.0	20	445	1.0	123.487	-B450	071-42	
11	449	1.3	1.1	346	4.7	449	11	449	1.3	20	457	1.3	126.580	-B600	071-42	
11	454	1.8	1.1	350	4.7	454	11	454	1.8	20	461	1.8	127.861	-B820	071-42	
10	501	1.2	1.0	386	4.3	501	10	501	1.2	18	509	1.2	140.995	-B600	071-42	
9.7	512	0.9	1.0	394	4.2	512	9.7	512	0.9	17	520	0.9	144.128	-B450	071-42	
9.5	526	1.6	1.0	405	4.1	526	9.5	526	1.6	17	534	1.5	148.000	-B820	071-42	
9.4	532	2.8	1.0	410	4.0	532	9.4	532	2.8	17	541	2.8	149.949	-B1500	071-42	
8.6	582	1.0	0.9	448	3.7	582	8.6	582	1.0	15	591	1.0	163.810	-B600	071-42	
8.5	585	2.6	0.9	451	3.6	585	8.5	585	2.6	15	594	2.5	164.833	-B1500	071-42	
8.5	588	1.4	0.9	452	3.6	588	8.5	588	1.4	15	597	1.4	165.467	-B820	071-42	
7.9	633	1.0	0.8	487	3.4	633	7.9	633	1.0	14	643	0.9	178.224	-B600	071-42	
7.8	638	1.3	0.8	491	3.3	638	7.8	638	1.3	14	648	1.3	179.618	-B820	071-42	
7.7	646	2.3	0.8	498	3.3	646	7.7	646	2.3	14	656	2.3	181.983	-B1500	071-42	
7.1	706	0.9	0.7	544	3.0	706	7.1	706	0.9	13	717	0.8	198.805	-B600	071-42	
7.0	710	2.1	0.7	547	3.0	710	7.0	710	2.1	13	721	2.1	200.048	-B1500	071-42	
7.0	713	1.2	0.7	549	3.0	713	7.0	713	1.2	13	724	1.1	200.816	-B820	071-42	

Selection tables, 4-pole motors

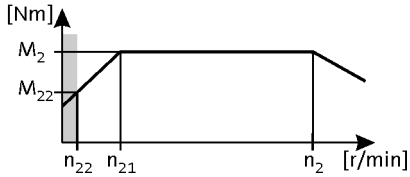

50 Hz: P_N = 0.55 kW
87 Hz: P_N = 1.0 kW

3-stage gearboxes

Mains operation 400 V, 50 Hz			Inverter operation 5 Hz -		- 20 Hz		- 50 Hz (1:10)			- 87 Hz (1:17.4)			i	Product		
n_2 [r/min]	M_2 [Nm]	c	n_{22} [r/min]	M_{22} [Nm]	n_{21} [r/min]	M_2 [Nm]	n_2 [r/min]	M_2 [Nm]	c	n_2 [r/min]	M_2 [Nm]	c		g500	MD□MA□□	
6.2	806	1.0	0.6	621	2.6	806	6.2	806	1.0	11	819	1.0	227.045	-B820	071-42	
6.1	817	1.8	0.6	629	2.6	817	6.1	817	1.8	11	830	1.8	230.035	-B1500	071-42	
5.6	898	1.7	0.6	691	2.4	898	5.6	898	1.7	9.9	912	1.6	252.869	-B1500	071-42	
5.5	901	0.9	0.6	694	2.4	901	5.5	901	0.9	9.9	915	0.9	253.841	-B820	071-42	

Selection tables, 4-pole motors

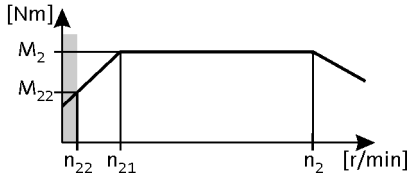

50 Hz: P_N = 0.75 kW
87 Hz: P_N = 1.35 kW

2-stage gearboxes

Mains operation 400 V, 50 Hz			Inverter operation 5 Hz -		- 20 Hz		- 50 Hz (1:10)			- 87 Hz (1:17.4)			i	Product		
n_2 [r/min]	M_2 [Nm]	c	n_{22} [r/min]	M_{22} [Nm]	n_{21} [r/min]	M_2 [Nm]	n_2 [r/min]	M_2 [Nm]	c	n_2 [r/min]	M_2 [Nm]	c		g500	m5□□	
407	17	4.9	41	13	168	17	407	17	4.9	718	17	4.0	3.565	-B240	50-P80/M4	
280	24	2.8	28	19	116	24	280	24	2.8	494	25	2.3	5.185	-B110	50-P80/M4	
243	28	2.6	24	22	101	28	243	28	2.6	429	29	2.1	5.963	-B110	50-P80/M4	
232	29	4.3	23	23	96	29	232	29	4.3	409	30	3.5	6.257	-B240	50-P80/M4	
211	32	4.9	21	25	87	32	211	32	4.9	372	33	4.0	6.883	-B240	50-P80/M4	
204	33	2.3	20	26	84	33	204	33	2.3	360	34	1.9	7.111	-B110	50-P80/M4	
186	37	4.9	19	28	77	37	186	37	4.9	328	37	4.0	7.817	-B240	50-P80/M4	
177	38	2.1	18	30	73	38	177	38	2.1	313	39	1.7	8.178	-B110	50-P80/M4	
159	43	2.0	16	33	66	43	159	43	2.0	281	44	1.6	9.101	-B110	50-P80/M4	
139	49	1.8	14	38	57	49	139	49	1.8	245	50	1.5	10.466	-B110	50-P80/M4	
127	54	1.7	13	41	52	54	127	54	1.7	224	55	1.4	11.449	-B110	50-P80/M4	
120	57	3.7	12	44	50	57	120	57	3.7	212	58	3.0	12.081	-B240	50-P80/M4	
114	60	1.5	11	46	47	60	114	60	1.5	202	61	1.2	12.698	-B110	50-P80/M4	
106	64	3.4	11	50	44	64	106	64	3.4	187	66	2.8	13.719	-B240	50-P80/M4	
99	69	1.3	9.9	53	41	69	99	69	1.3	175	70	1.1	14.603	-B110	50-P80/M4	
97	70	3.2	9.7	54	40	70	97	70	3.2	171	72	2.6	15.008	-B240	50-P80/M4	
93	73	1.3	9.3	56	39	73	93	73	1.3	165	74	1.0	15.556	-B110	50-P80/M4	
86	79	3.0	8.6	61	36	79	86	79	3.0	152	81	2.5	16.857	-B240	50-P80/M4	
81	84	1.1	8.1	65	34	84	81	84	1.1	143	86	0.9	17.889	-B110	50-P80/M4	
76	90	2.7	7.6	69	31	90	76	90	2.7	134	92	2.2	19.143	-B240	50-P80/M4	
74	92	1.1	7.4	71	31	92	74	92	1.1	131	94	0.9	19.556	-B110	50-P80/M4	
70	97	2.5	7.0	75	29	97	70	97	2.5	124	99	2.0	20.650	-B240	50-P80/M4	
65	106	1.0	6.4	81	27	106	65	106	1.0	114	108	0.8	22.489	-B110	50-P80/M4	
62	110	2.2	6.2	85	26	110	62	110	2.2	109	112	1.8	23.450	-B240	50-P80/M4	
58	118	0.9	5.8	91	24	118	58	118	0.9				25.185	-B110	50-P80/M4	
54	126	1.9	5.4	97	22	126	54	126	1.9	95	129	1.6	26.878	-B240	50-P80/M4	
50	136	0.8	5.0	105	21	136	50	136	0.8				28.963	-B110	50-P80/M4	
48	143	1.7	4.8	110	20	143	48	143	1.7	84	146	1.4	30.522	-B240	50-P80/M4	
43	157	1.5	4.3	121	18	157	43	157	1.5	77	160	1.3	33.433	-B240	50-P80/M4	
38	178	1.4	3.8	137	16	178	38	178	1.4	67	182	1.1	37.967	-B240	50-P80/M4	
34	203	1.2	3.4	156	14	203	34	203	1.2	59	207	1.1	43.267	-B240	50-P80/M4	
30	231	1.0	3.0	177	12	231	30	231	1.0	52	235	1.0	49.133	-B240	50-P80/M4	
28	246	1.0	2.8	190	11	246	28	246	1.0	49	251	0.9	52.510	-B240	50-P80/M4	
24	280	0.9	2.4	215	10	280	24	280	0.9				59.630	-B240	50-P80/M4	

Selection tables, 4-pole motors

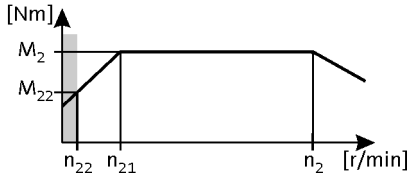

50 Hz: P_N = 0.75 kW
87 Hz: P_N = 1.35 kW

3-stage gearboxes

Mains operation 400 V, 50 Hz			Inverter operation 5 Hz -		- 20 Hz		- 50 Hz (1:10)			- 87 Hz (1:17.4)			i	Product		
n_2 [r/min]	M_2 [Nm]	c	n_{22} [r/min]	M_{22} [Nm]	n_{21} [r/min]	M_2 [Nm]	n_2 [r/min]	M_2 [Nm]	c	n_2 [r/min]	M_2 [Nm]	c		g500	m5□□	
290	23	4.9	29	18	120	23	290	23	4.9	512	24	4.0	5.002	-B450	50-P80/M4	
156	44	4.9	16	34	64	44	156	44	4.9	275	45	4.0	9.315	-B450	50-P80/M4	
140	48	4.9	14	37	58	48	140	48	4.9	248	49	4.0	10.328	-B450	50-P80/M4	
119	57	4.3	12	44	49	57	119	57	4.3	211	58	3.5	12.143	-B820	50-P80/M4	
89	77	4.3	8.9	59	37	77	89	77	4.3	157	78	3.5	16.349	-B450	50-P80/M4	
81	84	4.3	8.1	65	34	84	81	84	4.3	143	86	3.5	17.885	-B450	50-P80/M4	
78	88	4.3	7.8	67	32	88	78	88	4.3	137	89	3.5	18.655	-B820	50-P80/M4	
73	93	4.3	7.3	72	30	93	73	93	4.3	129	95	3.5	19.831	-B450	50-P80/M4	
70	98	4.3	7.0	75	29	100	70	98	4.3	123	100	3.5	20.857	-B820	50-P80/M4	
64	107	4.0	6.4	82	26	107	64	107	4.0	112	109	3.3	22.813	-B450	50-P80/M4	
57	119	3.8	5.7	91	24	119	57	119	3.8	101	121	3.1	25.294	-B450	50-P80/M4	
52	131	3.4	5.2	101	22	131	52	131	3.4	92	134	2.8	27.945	-B450	50-P80/M4	
49	140	3.5	4.9	107	20	140	49	140	3.5	86	142	2.9	29.744	-B600	50-P80/M4	
49	140	3.5	4.9	107	20	140	49	140	3.5	86	142	2.9	29.745	-B820	50-P80/M4	
47	145	3.1	4.7	112	19	145	47	145	3.1	83	148	2.5	30.985	-B450	50-P80/M4	
40	171	2.6	4.0	131	17	171	40	171	2.6	70	174	2.2	36.373	-B450	50-P80/M4	
39	174	3.0	3.9	134	16	174	39	174	3.0	69	177	2.5	36.999	-B600	50-P80/M4	
39	174	3.0	3.9	134	16	174	39	174	3.0	69	177	2.5	37.000	-B820	50-P80/M4	
36	189	2.4	3.6	146	15	189	36	189	2.4	64	193	2.2	40.330	-B450	50-P80/M4	
35	197	3.1	3.5	151	14	197	35	197	3.1	61	201	2.8	41.940	-B600	50-P80/M4	
32	212	2.1	3.2	163	13	212	32	212	2.1	57	216	2.0	45.245	-B450	50-P80/M4	
29	235	1.9	2.9	181	12	235	29	235	1.9	51	240	1.8	50.167	-B450	50-P80/M4	
26	263	1.7	2.6	203	11	263	26	263	1.7	46	269	1.6	56.154	-B450	50-P80/M4	
25	271	3.0	2.5	208	10	271	25	271	3.0	44	276	2.8	57.662	-B820	50-P80/M4	
23	292	1.5	2.3	225	9.6	292	23	292	1.5	41	298	1.4	62.262	-B450	50-P80/M4	
23	299	2.0	2.3	230	9.4	299	23	299	2.0	40	305	1.9	63.822	-B600	50-P80/M4	
23	302	2.7	2.2	233	9.3	302	23	302	2.7	40	308	2.5	64.468	-B820	50-P80/M4	
22	317	1.9	2.1	244	8.9	317	22	317	1.9	38	323	1.8	67.513	-B600	50-P80/M4	
21	323	1.4	2.1	248	8.7	323	21	323	1.4	37	329	1.3	68.788	-B450	50-P80/M4	
20	339	1.8	2.0	261	8.3	339	20	339	1.8	36	345	1.7	72.170	-B600	50-P80/M4	
19	352	3.0	1.9	271	8.0	352	19	352	3.0	34	359	2.8	74.963	-B1500	50-P80/M4	
19	358	1.3	1.9	275	7.9	358	19	358	1.3	34	365	1.2	76.271	-B450	50-P80/M4	
18	384	1.6	1.8	296	7.3	384	18	384	1.6	31	392	1.5	81.937	-B600	50-P80/M4	
18	388	2.6	1.8	299	7.2	388	18	388	2.6	31	396	2.4	82.762	-B1500	50-P80/M4	
16	420	1.1	1.6	323	6.7	420	16	420	1.1	29	428	1.0	89.534	-B450	50-P80/M4	

Selection tables, 4-pole motors

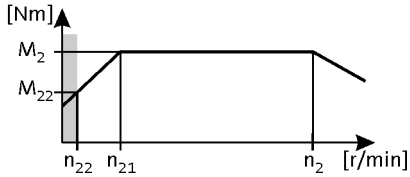

50 Hz: P_N = 0.75 kW
87 Hz: P_N = 1.35 kW

3-stage gearboxes

Mains operation 400 V, 50 Hz			Inverter operation 5 Hz -		- 20 Hz		- 50 Hz (1:10)			- 87 Hz (1:17.4)			i	Product		
n_2 [r/min]	M_2 [Nm]	c	n_{22} [r/min]	M_{22} [Nm]	n_{21} [r/min]	M_2 [Nm]	n_2 [r/min]	M_2 [Nm]	c	n_2 [r/min]	M_2 [Nm]	c		g500	m5□□	
16	421	1.4	1.6	324	6.7	421	16	421	1.4	29	429	1.3	89.772	-B600	50-P80/M4	
16	427	2.6	1.6	328	6.6	427	16	427	2.6	28	435	2.4	90.978	-B1500	50-P80/M4	
16	431	1.9	1.6	332	6.5	431	16	431	1.9	28	440	1.8	91.939	-B820	50-P80/M4	
15	466	1.0	1.5	358	6.0	466	15	466	1.0	26	475	0.9	99.274	-B450	50-P80/M4	
14	477	1.3	1.4	367	5.9	477	14	477	1.3	25	487	1.2	101.760	-B600	50-P80/M4	
14	482	1.7	1.4	371	5.8	482	14	482	1.7	25	492	1.6	102.790	-B820	50-P80/M4	
13	523	0.9	1.3	402	5.4	523	13	523	0.9	23	533	0.8	111.372	-B450	50-P80/M4	
13	537	1.5	1.3	413	5.2	537	13	537	1.5	22	547	1.5	114.364	-B820	50-P80/M4	
13	545	1.1	1.2	419	5.2	545	13	545	1.1	22	556	1.1	116.175	-B600	50-P80/M4	
12	594	1.0	1.1	457	4.7	594	12	594	1.0	20	605	1.0	126.580	-B600	50-P80/M4	
11	600	1.4	1.1	462	4.7	600	11	600	1.4	20	612	1.3	127.861	-B820	50-P80/M4	
10	661	0.9	1.0	509	4.3	661	10	661	0.9	18	674	0.9	140.995	-B600	50-P80/M4	
9.8	694	1.2	1.0	534	4.1	694	9.8	694	1.2	17	708	1.2	148.000	-B820	50-P80/M4	
9.7	704	2.1	1.0	541	4.0	704	9.7	704	2.1	17	717	2.1	149.949	-B1500	50-P80/M4	
8.8	773	1.9	0.9	595	3.6	773	8.8	773	1.9	16	788	1.9	164.833	-B1500	50-P80/M4	
8.8	776	1.1	0.9	597	3.6	776	8.8	776	1.1	16	791	1.0	165.467	-B820	50-P80/M4	
8.1	843	1.0	0.8	648	3.3	843	8.1	843	1.0	14	859	1.0	179.618	-B820	50-P80/M4	
8.0	854	1.8	0.8	657	3.3	854	8.0	854	1.8	14	870	1.7	181.983	-B1500	50-P80/M4	
7.2	939	1.6	0.7	722	3.0	939	7.2	939	1.6	13	957	1.6	200.048	-B1500	50-P80/M4	
7.2	942	0.9	0.7	725	3.0	942	7.2	942	0.9	13	961	0.9	200.816	-B820	50-P80/M4	
6.3	1079	1.4	0.6	830	2.6	1079	6.3	1079	1.4	11	1100	1.4	230.035	-B1500	50-P80/M4	
5.7	1186	1.3	0.6	913	2.4	1186	5.7	1186	1.3	10	1210	1.2	252.869	-B1500	50-P80/M4	

Selection tables, 4-pole motors

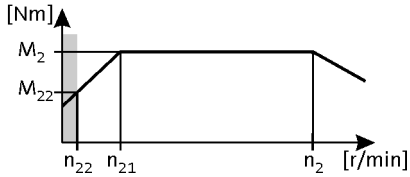

50 Hz: P_N = 1.1 kW
87 Hz: P_N = 1.9 kW

2-stage gearboxes

Mains operation 400 V, 50 Hz			Inverter operation 5 Hz -		- 20 ... 25 Hz		- 50 Hz (1:10)			- 87 Hz (1:17.4)			i	Product		
n_2 [r/min]	M_2 [Nm]	c	n_{22} [r/min]	M_{22} [Nm]	n_{21} [r/min]	M_2 [Nm]	n_2 [r/min]	M_2 [Nm]	c	n_2 [r/min]	M_2 [Nm]	c		g500	m5□□	
405	25	5.6	41	17	168	24	405	25	5.6	715	24	4.8	3.565	-B240	50-P90/M4	
295	34	4.4	30	24	123	33	295	34	4.4	522	33	3.7	4.889	-B240	50-P90/M4	
279	36	1.9	28	25	116	35	279	36	1.9	492	35	1.7	5.185	-B110	50-P90/M4	
242	41	1.8	24	29	101	40	242	41	1.8	428	40	1.5	5.963	-B110	50-P90/M4	
231	43	3.6	23	30	96	42	231	43	3.6	408	42	3.1	6.257	-B240	50-P90/M4	
210	48	3.8	21	33	87	47	210	48	3.8	371	47	3.2	6.883	-B240	50-P90/M4	
203	49	1.6	20	35	84	48	203	49	1.6	359	48	1.3	7.111	-B110	50-P90/M4	
185	54	3.5	19	38	77	53	185	54	3.5	326	53	3.0	7.817	-B240	50-P90/M4	
177	57	1.4	18	40	73	55	177	57	1.4	312	55	1.2	8.178	-B110	50-P90/M4	
159	63	1.3	16	44	66	62	159	63	1.3	280	62	1.1	9.101	-B110	50-P90/M4	
153	65	2.9	15	46	64	64	153	65	2.9	270	64	2.5	9.440	-B240	50-P90/M4	
138	72	1.2	14	51	57	71	138	72	1.2	244	71	1.1	10.466	-B110	50-P90/M4	
135	74	2.8	14	52	56	72	135	74	2.8	238	72	2.4	10.720	-B240	50-P90/M4	
126	79	1.1	13	56	52	77	126	79	1.1	223	77	1.0	11.449	-B110	50-P90/M4	
120	83	2.5	12	59	50	82	120	83	2.5	211	82	2.1	12.081	-B240	50-P90/M4	
114	88	1.0	11	62	47	86	114	88	1.0	201	86	0.9	12.698	-B110	50-P90/M4	
105	95	2.3	11	67	44	93	105	95	2.3	186	93	2.0	13.719	-B240	50-P90/M4	
99	101	0.9	9.9	71	41	101	99	101	0.9				14.603	-B110	50-P90/M4	
96	104	2.2	9.7	73	40	101	96	104	2.2	170	101	1.8	15.008	-B240	50-P90/M4	
93	108	0.9	9.3	75	39	108	93	108	0.9				15.556	-B110	50-P90/M4	
86	116	2.1	8.6	82	36	114	86	116	2.1	151	114	1.8	16.857	-B240	50-P90/M4	
75	132	1.8	7.6	93	31	129	75	132	1.8	133	129	1.6	19.143	-B240	50-P90/M4	
70	143	1.7	7.0	100	29	140	70	143	1.7	124	140	1.4	20.650	-B240	50-P90/M4	
62	162	1.5	6.2	114	26	159	62	162	1.5	109	159	1.3	23.450	-B240	50-P90/M4	
54	186	1.3	5.4	130	22	182	54	186	1.3	95	182	1.1	26.878	-B240	50-P90/M4	
47	211	1.1	4.8	148	20	206	47	211	1.1	84	206	1.0	30.522	-B240	50-P90/M4	
43	231	1.0	4.3	162	18	226	43	231	1.0	76	226	0.9	33.433	-B240	50-P90/M4	
38	262	0.9	3.8	184	16	262	38	262	0.9				37.967	-B240	50-P90/M4	

3-stage gearboxes

Mains operation 400 V, 50 Hz			Inverter operation 5 Hz -		- 20 ... 25 Hz		- 50 Hz (1:10)			- 87 Hz (1:17.4)			i	Product		
n_2 [r/min]	M_2 [Nm]	c	n_{22} [r/min]	M_{22} [Nm]	n_{21} [r/min]	M_2 [Nm]	n_2 [r/min]	M_2 [Nm]	c	n_2 [r/min]	M_2 [Nm]	c		g500	m5□□	
289	35	5.9	29	24	120	34	289	35	5.9	510	34	5.0	5.002	-B450	50-P90/M4	
211	47	5.9	21	33	88	46	211	47	5.9	372	46	5.0	6.860	-B450	50-P90/M4	
155	64	5.7	16	45	64	63	155	64	5.7	274	63	4.9	9.315	-B450	50-P90/M4	
152	66	5.9	15	46	63	64	152	66	5.9	268	64	5.0	9.520	-B820	50-P90/M4	
140	71	5.4	14	50	58	70	140	71	5.4	247	70	4.6	10.328	-B450	50-P90/M4	
119	84	5.5	12	59	49	82	119	84	5.5	210	82	4.7	12.143	-B820	50-P90/M4	
113	88	4.6	11	62	47	86	113	88	4.6	200	86	3.9	12.775	-B450	50-P90/M4	

Selection tables, 4-pole motors

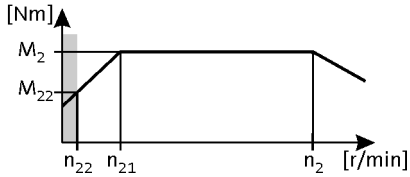

50 Hz: P_N = 1.1 kW
87 Hz: P_N = 1.9 kW

3-stage gearboxes

Mains operation 400 V, 50 Hz			Inverter operation 5 Hz -		- 20 ... 25 Hz		- 50 Hz (1:10)			- 87 Hz (1:17.4)			i	Product		
n_2 [r/min]	M_2 [Nm]	c	n_{22} [r/min]	M_{22} [Nm]	n_{21} [r/min]	M_2 [Nm]	n_2 [r/min]	M_2 [Nm]	c	n_2 [r/min]	M_2 [Nm]	c		g500	m5□□	
108	92	5.8	11	65	45	90	108	92	5.8	191	90	5.0	13.369	-B600	50-P90/M4	
108	92	5.8	11	65	45	90	108	92	5.8	191	90	5.0	13.370	-B820	50-P90/M4	
102	98	4.3	10	69	42	96	102	98	4.3	180	96	3.7	14.165	-B450	50-P90/M4	
99	101	5.9	9.9	71	41	101	99	101	5.9	174	99	5.0	14.626	-B820	50-P90/M4	
88	113	3.8	8.9	79	37	110	88	113	3.8	156	110	3.3	16.349	-B450	50-P90/M4	
88	113	5.9	8.9	79	37	111	88	113	5.9	156	111	5.0	16.352	-B820	50-P90/M4	
81	124	3.6	8.1	87	34	121	81	124	3.6	143	121	3.1	17.885	-B450	50-P90/M4	
77	129	5.5	7.8	90	32	126	77	129	5.5	137	126	4.7	18.655	-B820	50-P90/M4	
77	130	4.6	7.7	91	32	127	77	130	4.6	135	127	4.0	18.851	-B600	50-P90/M4	
73	137	3.3	7.3	96	30	134	73	137	3.3	129	134	2.8	19.831	-B450	50-P90/M4	
70	142	4.2	7.0	100	29	139	70	142	4.2	124	139	3.6	20.622	-B600	50-P90/M4	
69	144	5.5	7.0	101	29	141	69	144	5.5	122	141	4.7	20.857	-B820	50-P90/M4	
63	158	2.9	6.4	111	26	154	63	158	2.9	112	154	2.5	22.813	-B450	50-P90/M4	
63	158	3.8	6.3	111	26	154	63	158	3.8	112	154	3.3	22.852	-B600	50-P90/M4	
63	158	4.8	6.3	111	26	154	63	158	4.8	112	154	4.1	22.853	-B820	50-P90/M4	
57	175	2.6	5.7	123	24	171	57	175	2.6	101	171	2.2	25.294	-B450	50-P90/M4	
57	177	4.6	5.7	124	24	173	57	177	4.6	100	173	4.0	25.550	-B820	50-P90/M4	
52	193	2.3	5.2	135	22	189	52	193	2.3	91	189	2.0	27.945	-B450	50-P90/M4	
49	202	5.8	5.0	142	21	197	49	202	5.8	87	197	5.0	29.206	-B1500	50-P90/M4	
49	206	2.9	4.9	144	20	201	49	206	2.9	86	201	2.5	29.744	-B600	50-P90/M4	
49	206	4.0	4.9	144	20	201	49	206	4.0	86	201	3.4	29.745	-B820	50-P90/M4	
47	214	2.1	4.7	150	19	209	47	214	2.1	82	209	1.8	30.985	-B450	50-P90/M4	
45	224	2.7	4.5	157	19	219	45	224	2.7	79	219	2.3	32.439	-B600	50-P90/M4	
40	251	1.8	4.0	176	17	246	40	251	1.8	70	246	1.5	36.373	-B450	50-P90/M4	
39	256	2.4	3.9	179	16	250	39	256	2.4	69	250	2.0	36.999	-B600	50-P90/M4	
39	256	3.2	3.9	179	16	250	39	256	3.2	69	250	2.8	37.000	-B820	50-P90/M4	
36	279	1.6	3.6	195	15	273	36	279	1.6	63	273	1.6	40.330	-B450	50-P90/M4	
35	286	2.9	3.5	200	15	279	35	286	2.9	62	279	2.8	41.325	-B820	50-P90/M4	
34	290	2.1	3.5	203	14	283	34	290	2.1	61	283	2.0	41.940	-B600	50-P90/M4	
32	312	2.6	3.2	219	13	306	32	312	2.6	56	306	2.6	45.207	-B820	50-P90/M4	
32	313	1.4	3.2	219	13	306	32	313	1.4	56	306	1.4	45.245	-B450	50-P90/M4	
32	316	1.9	3.2	222	13	309	32	316	1.9	56	309	1.9	45.739	-B600	50-P90/M4	
31	322	4.7	3.1	226	13	315	31	322	4.7	55	315	4.5	46.568	-B1500	50-P90/M4	
29	346	1.7	2.9	242	12	338	29	346	1.7	51	338	1.7	50.036	-B600	50-P90/M4	
29	347	1.3	2.9	243	12	339	29	347	1.3	51	339	1.3	50.167	-B450	50-P90/M4	

Selection tables, 4-pole motors

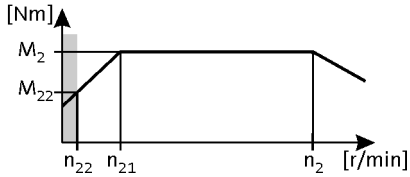

50 Hz: P_N = 1.1 kW
87 Hz: P_N = 1.9 kW

3-stage gearboxes

Mains operation 400 V, 50 Hz			Inverter operation 5 Hz -		- 20 ... 25 Hz		- 50 Hz (1:10)			- 87 Hz (1:17.4)			i	Product		
n_2 [r/min]	M_2 [Nm]	c	n_{22} [r/min]	M_{22} [Nm]	n_{21} [r/min]	M_2 [Nm]	n_2 [r/min]	M_2 [Nm]	c	n_2 [r/min]	M_2 [Nm]	c		g500	m5□□	
29	349	2.4	2.9	245	12	342	29	349	2.4	51	342	2.3	50.543	-B820	50-P90/M4	
28	359	4.0	2.8	252	12	351	28	359	4.0	49	351	3.9	51.920	-B1500	50-P90/M4	
26	383	1.6	2.6	269	11	375	26	383	1.6	46	375	1.5	55.447	-B600	50-P90/M4	
26	388	1.2	2.6	272	11	380	26	388	1.2	45	380	1.1	56.154	-B450	50-P90/M4	
25	394	3.8	2.5	277	11	386	25	394	3.8	45	386	3.7	57.074	-B1500	50-P90/M4	
25	398	2.1	2.5	279	10	390	25	398	2.1	44	390	2.0	57.662	-B820	50-P90/M4	
25	404	3.7	2.5	283	10	395	25	404	3.7	44	395	3.6	58.422	-B1500	50-P90/M4	
23	430	1.1	2.3	302	9.6	421	23	430	1.1	41	421	1.0	62.262	-B450	50-P90/M4	
23	441	1.4	2.3	309	9.4	431	23	441	1.4	40	431	1.3	63.822	-B600	50-P90/M4	
23	444	3.4	2.3	311	9.3	434	23	444	3.4	40	434	3.3	64.221	-B1500	50-P90/M4	
22	445	1.8	2.2	312	9.3	436	22	445	1.8	40	436	1.8	64.468	-B820	50-P90/M4	
21	466	1.3	2.1	327	8.9	456	21	466	1.3	38	456	1.3	67.513	-B600	50-P90/M4	
21	475	1.0	2.1	333	8.7	465	21	475	1.0	37	465	0.9	68.788	-B450	50-P90/M4	
20	488	1.7	2.1	342	8.5	477	20	488	1.7	36	477	1.6	70.636	-B820	50-P90/M4	
20	499	1.2	2.0	350	8.3	488	20	499	1.2	35	488	1.2	72.170	-B600	50-P90/M4	
19	518	2.9	1.9	363	8.0	507	19	518	2.9	34	507	2.8	74.963	-B1500	50-P90/M4	
19	527	0.9	1.9	370	7.9	515	19	527	0.9	33	515	0.8	76.271	-B450	50-P90/M4	
19	531	4.0	1.9	372	7.8	519	19	531	4.0	33	519	3.9	76.862	-B2700	50-P90/M4	
19	540	1.1	1.9	379	7.7	528	19	540	1.1	33	528	1.1	78.182	-B600	50-P90/M4	
18	546	1.5	1.8	383	7.6	534	18	546	1.5	32	534	1.5	78.973	-B820	50-P90/M4	
18	566	1.1	1.8	397	7.3	554	18	566	1.1	31	554	1.0	81.937	-B600	50-P90/M4	
17	572	2.6	1.8	401	7.2	559	17	572	2.6	31	559	2.6	82.762	-B1500	50-P90/M4	
17	587	3.5	1.7	412	7.1	574	17	587	3.5	30	574	3.4	84.940	-B2700	50-P90/M4	
16	620	1.0	1.6	435	6.7	607	16	620	1.0	28	607	0.9	89.772	-B600	50-P90/M4	
16	629	2.4	1.6	441	6.6	615	16	629	2.4	28	615	2.3	90.978	-B1500	50-P90/M4	
16	635	1.3	1.6	445	6.5	621	16	635	1.3	28	621	1.3	91.939	-B820	50-P90/M4	
16	644	2.3	1.6	451	6.4	630	16	644	2.3	27	630	2.3	93.150	-B1500	50-P90/M4	
16	645	3.5	1.6	452	6.4	630	16	645	3.5	27	630	3.4	93.283	-B2700	50-P90/M4	
14	703	0.9	1.4	493	5.9	688	14	703	0.9	25	688	0.8	101.760	-B600	50-P90/M4	
14	708	2.1	1.4	496	5.9	692	14	708	2.1	25	692	2.1	102.396	-B1500	50-P90/M4	
14	710	1.2	1.4	498	5.8	695	14	710	1.2	25	695	1.1	102.790	-B820	50-P90/M4	
13	789	1.9	1.3	553	5.3	772	13	789	1.9	22	772	1.9	114.166	-B1500	50-P90/M4	
13	790	1.0	1.3	554	5.2	773	13	790	1.0	22	773	1.1	114.364	-B820	50-P90/M4	
12	867	1.7	1.2	608	4.8	848	12	867	1.7	20	848	1.8	125.498	-B1500	50-P90/M4	
11	883	0.9	1.1	619	4.7	864	11	883	0.9	20	864	1.0	127.861	-B820	50-P90/M4	

Selection tables, 4-pole motors

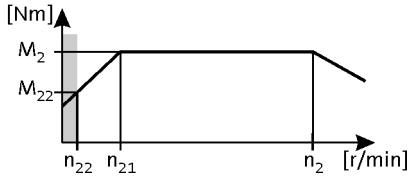

50 Hz: P_N = 1.1 kW
87 Hz: P_N = 1.9 kW

3-stage gearboxes

Mains operation 400 V, 50 Hz			Inverter operation 5 Hz -		- 20 ... 25 Hz		- 50 Hz (1:10)			- 87 Hz (1:17.4)			i	Product		
n_2 [r/min]	M_2 [Nm]	c	n_{22} [r/min]	M_{22} [Nm]	n_{21} [r/min]	M_2 [Nm]	n_2 [r/min]	M_2 [Nm]	c	n_2 [r/min]	M_2 [Nm]	c		g500	m5□□	
9.6	1036	1.5	1.0	726	4.0	1013	9.6	1036	1.5	17	1013	1.5	149.949	-B1500	50-P90/M4	
9.4	1058	4.0	0.9	742	3.9	1035	9.4	1058	4.0	17	1035	4.1	153.141	-B4300	50-P90/M4	
9.4	1058	2.6	0.9	742	3.9	1035	9.4	1058	2.6	17	1035	2.6	153.185	-B2700	50-P90/M4	
8.8	1139	1.3	0.9	799	3.6	1114	8.8	1139	1.3	16	1114	1.4	164.833	-B1500	50-P90/M4	
8.6	1157	3.7	0.9	811	3.6	1131	8.6	1157	3.7	15	1131	3.8	167.383	-B4300	50-P90/M4	
8.6	1162	2.3	0.9	815	3.6	1137	8.6	1162	2.3	15	1137	2.4	168.230	-B2700	50-P90/M4	
7.9	1257	1.2	0.8	882	3.3	1230	7.9	1257	1.2	14	1230	1.2	181.983	-B1500	50-P90/M4	
7.8	1284	3.4	0.8	900	3.2	1256	7.8	1284	3.4	14	1256	3.4	185.857	-B4300	50-P90/M4	
7.8	1285	2.1	0.8	901	3.2	1256	7.8	1285	2.1	14	1256	2.2	185.911	-B2700	50-P90/M4	
7.2	1382	1.1	0.7	969	3.0	1352	7.2	1382	1.1	13	1352	1.1	200.048	-B1500	50-P90/M4	
7.1	1404	3.1	0.7	984	3.0	1373	7.1	1404	3.1	13	1373	3.1	203.143	-B4300	50-P90/M4	
7.1	1411	1.9	0.7	989	2.9	1380	7.1	1411	1.9	13	1380	2.0	204.170	-B2700	50-P90/M4	
6.3	1589	0.9	0.6	1114	2.6	1555	6.3	1589	0.9	11	1555	1.0	230.035	-B1500	50-P90/M4	
6.1	1623	2.7	0.6	1138	2.6	1588	6.1	1623	2.7	11	1588	2.7	234.932	-B4300	50-P90/M4	
6.1	1624	1.7	0.6	1138	2.6	1588	6.1	1624	1.7	11	1588	1.7	235.000	-B2700	50-P90/M4	
5.7	1747	0.9	0.6	1225	2.4	1709	5.7	1747	0.9	10	1709	0.9	252.869	-B1500	50-P90/M4	
5.6	1774	2.4	0.6	1244	2.3	1735	5.6	1774	2.4	9.9	1735	2.5	256.781	-B4300	50-P90/M4	
5.6	1783	1.5	0.6	1250	2.3	1744	5.6	1783	1.5	9.9	1744	1.6	258.080	-B2700	50-P90/M4	

Selection tables, 4-pole motors

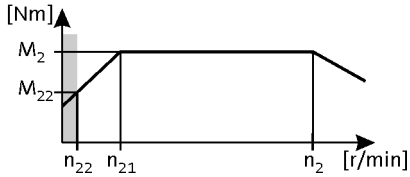

50 Hz: P_N = 1.5 kW
87 Hz: P_N = 2.6 kW

2-stage gearboxes

Mains operation 400 V, 50 Hz			Inverter operation 5 Hz -		- 20 ... 25 Hz		- 50 Hz (1:10)			- 87 Hz (1:17.4)			i	Product		
n_2 [r/min]	M_2 [Nm]	c	n_{22} [r/min]	M_{22} [Nm]	n_{21} [r/min]	M_2 [Nm]	n_2 [r/min]	M_2 [Nm]	c	n_2 [r/min]	M_2 [Nm]	c		g500	m5□□	
405	34	4.1	41	24	168	33	405	34	4.1	716	33	3.5	3.565	-B240	50-P90/L4	
295	46	3.2	30	33	123	45	295	46	3.2	522	45	2.7	4.889	-B240	50-P90/L4	
278	49	1.4	28	35	116	49	278	49	1.4				5.185	-B110	50-P90/L4	
242	56	1.3	24	40	101	56	242	56	1.3				5.963	-B110	50-P90/L4	
231	59	2.6	23	42	96	58	231	59	2.6	408	58	2.3	6.257	-B240	50-P90/L4	
210	65	2.8	21	46	87	64	210	65	2.8	371	64	2.4	6.883	-B240	50-P90/L4	
203	67	1.2	20	47	84	67	203	67	1.2				7.111	-B110	50-P90/L4	
185	74	2.5	19	52	77	74	185	74	2.5				7.817	-B240	50-P90/L4	
176	77	1.1	18	54	73	77	176	77	1.1				8.178	-B110	50-P90/L4	
159	86	1.0	16	61	66	86	159	86	1.0				9.101	-B110	50-P90/L4	
153	89	2.1	15	63	64	87	153	89	2.1	270	87	1.8	9.440	-B240	50-P90/L4	
138	99	0.9	14	70	57	99	138	99	0.9				10.466	-B110	50-P90/L4	
135	101	2.0	14	71	56	101	135	101	2.0	238	99	1.7	10.720	-B240	50-P90/L4	
126	108	0.8	13	76	52	108	126	108	0.8				11.449	-B110	50-P90/L4	
119	114	1.8	12	80	50	112	119	114	1.8	211	112	1.6	12.081	-B240	50-P90/L4	
105	129	1.7	11	91	44	127	105	129	1.7	186	127	1.4	13.719	-B240	50-P90/L4	
96	142	1.6	9.7	100	40	139	96	142	1.6	170	139	1.4	15.008	-B240	50-P90/L4	
86	159	1.5	8.6	112	36	156	86	159	1.5	151	156	1.3	16.857	-B240	50-P90/L4	
75	181	1.3	7.6	127	31	177	75	181	1.3	133	177	1.1	19.143	-B240	50-P90/L4	
70	195	1.2	7.0	137	29	191	70	195	1.2	124	191	1.1	20.650	-B240	50-P90/L4	
62	221	1.1	6.2	156	26	217	62	221	1.1	109	217	0.9	23.450	-B240	50-P90/L4	
54	254	1.0	5.4	179	22	248	54	254	1.0	95	248	0.8	26.878	-B240	50-P90/L4	
47	288	0.8	4.8	203	20	288	47	288	0.8				30.522	-B240	50-P90/L4	

3-stage gearboxes

Mains operation 400 V, 50 Hz			Inverter operation 5 Hz -		- 20 ... 25 Hz		- 50 Hz (1:10)			- 87 Hz (1:17.4)			i	Product		
n_2 [r/min]	M_2 [Nm]	c	n_{22} [r/min]	M_{22} [Nm]	n_{21} [r/min]	M_2 [Nm]	n_2 [r/min]	M_2 [Nm]	c	n_2 [r/min]	M_2 [Nm]	c		g500	m5□□	
288	47	4.3	29	33	120	46	288	47	4.3	510	46	3.7	5.002	-B450	50-P90/L4	
210	65	4.3	21	46	88	63	210	65	4.3	372	63	3.7	6.860	-B450	50-P90/L4	
155	88	4.2	16	62	64	86	155	88	4.2	274	86	3.6	9.315	-B450	50-P90/L4	
152	90	4.3	15	63	63	88	152	90	4.3	268	88	3.7	9.520	-B820	50-P90/L4	
140	97	3.9	14	69	58	95	140	97	3.9	247	95	3.4	10.328	-B450	50-P90/L4	
119	115	4.0	12	81	49	112	119	115	4.0	210	112	3.4	12.143	-B820	50-P90/L4	
113	121	3.4	11	85	47	118	113	121	3.4	200	118	2.9	12.775	-B450	50-P90/L4	
108	126	4.2	11	89	45	124	108	126	4.2	191	124	3.6	13.369	-B600	50-P90/L4	
108	126	4.2	11	89	45	124	108	126	4.2	191	124	3.6	13.370	-B820	50-P90/L4	
102	134	3.2	10	94	42	131	102	134	3.2	180	131	2.7	14.165	-B450	50-P90/L4	
99	138	4.3	9.9	97	41	135	99	138	4.3	175	135	3.7	14.626	-B820	50-P90/L4	
88	154	2.8	8.9	109	37	151	88	154	2.8	156	151	2.4	16.349	-B450	50-P90/L4	

Selection tables, 4-pole motors

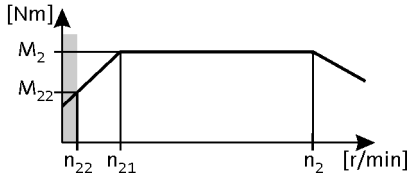

50 Hz: P_N = 1.5 kW
87 Hz: P_N = 2.6 kW

3-stage gearboxes

Mains operation 400 V, 50 Hz			Inverter operation 5 Hz -		- 20 ... 25 Hz		- 50 Hz (1:10)			- 87 Hz (1:17.4)			i	Product		
n_2 [r/min]	M_2 [Nm]	c	n_{22} [r/min]	M_{22} [Nm]	n_{21} [r/min]	M_2 [Nm]	n_2 [r/min]	M_2 [Nm]	c	n_2 [r/min]	M_2 [Nm]	c		g500	m5□□	
88	154	4.3	8.9	109	37	151	88	154	4.3	156	151	3.7	16.352	-B820	50-P90/L4	
81	169	2.6	8.1	119	34	165	81	169	2.6	143	165	2.3	17.885	-B450	50-P90/L4	
77	176	4.0	7.8	124	32	172	77	176	4.0	137	172	3.4	18.655	-B820	50-P90/L4	
77	178	3.4	7.7	125	32	174	77	178	3.4	135	174	2.9	18.851	-B600	50-P90/L4	
73	187	2.4	7.3	132	30	183	73	187	2.4	129	183	2.1	19.831	-B450	50-P90/L4	
70	195	3.1	7.0	137	29	191	70	195	3.1	124	191	2.6	20.622	-B600	50-P90/L4	
69	197	4.0	7.0	139	29	193	69	197	4.0	122	193	3.4	20.857	-B820	50-P90/L4	
63	215	2.1	6.4	152	26	211	63	215	2.1	112	211	1.8	22.813	-B450	50-P90/L4	
63	216	2.8	6.3	152	26	211	63	216	2.8	112	211	2.4	22.852	-B600	50-P90/L4	
63	216	3.5	6.3	152	26	211	63	216	3.5	112	211	3.0	22.853	-B820	50-P90/L4	
57	239	1.9	5.7	168	24	234	57	239	1.9	101	234	1.6	25.294	-B450	50-P90/L4	
56	241	3.4	5.7	170	24	236	56	241	3.4	100	236	2.9	25.550	-B820	50-P90/L4	
52	264	1.7	5.2	186	22	258	52	264	1.7	91	258	1.5	27.945	-B450	50-P90/L4	
49	276	4.2	5.0	194	21	270	49	276	4.2	87	270	3.6	29.206	-B1500	50-P90/L4	
49	281	2.1	4.9	198	20	275	49	281	2.1	86	275	1.8	29.744	-B600	50-P90/L4	
49	281	2.9	4.9	198	20	275	49	281	2.9	86	275	2.5	29.745	-B820	50-P90/L4	
47	292	1.5	4.7	206	19	286	47	292	1.5	82	286	1.3	30.985	-B450	50-P90/L4	
45	306	2.0	4.5	216	19	300	45	306	2.0	79	300	1.7	32.439	-B600	50-P90/L4	
40	343	1.3	4.0	242	17	336	40	343	1.3	70	336	1.1	36.373	-B450	50-P90/L4	
39	349	1.7	3.9	246	16	342	39	349	1.7	69	342	1.5	36.999	-B600	50-P90/L4	
39	349	2.4	3.9	246	16	342	39	349	2.4	69	342	2.0	37.000	-B820	50-P90/L4	
36	381	1.2	3.6	268	15	373	36	381	1.2	63	373	1.2	40.330	-B450	50-P90/L4	
35	390	2.1	3.5	275	15	382	35	390	2.1	62	382	2.0	41.325	-B820	50-P90/L4	
34	396	1.5	3.5	279	14	388	34	396	1.5	61	388	1.5	41.940	-B600	50-P90/L4	
32	427	1.9	3.2	301	13	418	32	427	1.9	57	418	1.9	45.207	-B820	50-P90/L4	
32	427	1.1	3.2	301	13	418	32	427	1.1	56	418	1.0	45.245	-B450	50-P90/L4	
32	432	1.4	3.2	304	13	432	32	432	1.4				45.739	-B600	50-P90/L4	
31	439	3.4	3.1	310	13	430	31	439	3.4	55	430	3.3	46.568	-B1500	50-P90/L4	
29	472	1.3	2.9	333	12	472	29	472	1.3				50.036	-B600	50-P90/L4	
29	473	1.0	2.9	334	12	464	29	473	1.0	51	464	0.9	50.167	-B450	50-P90/L4	
29	477	1.7	2.9	336	12	467	29	477	1.7	51	467	1.7	50.543	-B820	50-P90/L4	
28	490	2.9	2.8	345	12	480	28	490	2.9	49	480	2.9	51.920	-B1500	50-P90/L4	
26	523	1.2	2.6	369	11	512	26	523	1.2	46	512	1.1	55.447	-B600	50-P90/L4	
26	530	0.9	2.6	373	11	530	26	530	0.9				56.154	-B450	50-P90/L4	
25	539	2.8	2.5	380	11	527	25	539	2.8	45	527	2.7	57.074	-B1500	50-P90/L4	

Selection tables, 4-pole motors

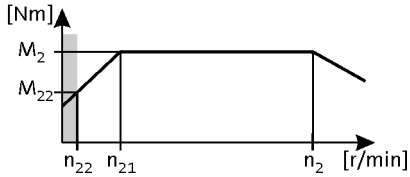

50 Hz: P_N = 1.5 kW
87 Hz: P_N = 2.6 kW

3-stage gearboxes

Mains operation 400 V, 50 Hz			Inverter operation 5 Hz -		- 20 ... 25 Hz		- 50 Hz (1:10)			- 87 Hz (1:17.4)			i	Product		
n_2 [r/min]	M_2 [Nm]	c	n_{22} [r/min]	M_{22} [Nm]	n_{21} [r/min]	M_2 [Nm]	n_2 [r/min]	M_2 [Nm]	c	n_2 [r/min]	M_2 [Nm]	c		g500	m5□□	
25	544	1.5	2.5	383	10	533	25	544	1.5	44	533	1.5	57.662	-B820	50-P90/L4	
25	551	2.7	2.5	388	10	540	25	551	2.7	44	540	2.6	58.422	-B1500	50-P90/L4	
23	602	1.0	2.3	424	9.4	602	23	602	1.0				63.822	-B600	50-P90/L4	
23	606	2.5	2.3	427	9.3	593	23	606	2.5	40	593	2.4	64.221	-B1500	50-P90/L4	
22	608	1.4	2.2	429	9.3	596	22	608	1.4	40	596	1.3	64.468	-B820	50-P90/L4	
21	637	0.9	2.1	449	8.9	624	21	637	0.9	38	624	0.9	67.513	-B600	50-P90/L4	
20	666	1.2	2.1	470	8.5	653	20	666	1.2	36	653	1.2	70.636	-B820	50-P90/L4	
20	681	0.9	2.0	480	8.3	667	20	681	0.9	35	667	0.9	72.170	-B600	50-P90/L4	
19	707	2.1	1.9	498	8.0	693	19	707	2.1	34	693	2.1	74.963	-B1500	50-P90/L4	
19	725	2.9	1.9	511	7.8	710	19	725	2.9	33	710	2.9	76.862	-B2700	50-P90/L4	
18	738	0.8	1.9	520	7.7	738	18	738	0.8				78.182	-B600	50-P90/L4	
18	745	1.1	1.8	525	7.6	730	18	745	1.1	32	730	1.1	78.973	-B820	50-P90/L4	
17	781	1.9	1.8	550	7.2	765	17	781	1.9	31	765	1.9	82.762	-B1500	50-P90/L4	
17	801	2.6	1.7	565	7.1	785	17	801	2.6	30	785	2.5	84.940	-B2700	50-P90/L4	
16	858	1.8	1.6	605	6.6	841	16	858	1.8	28	841	1.7	90.978	-B1500	50-P90/L4	
16	867	1.0	1.6	611	6.5	850	16	867	1.0	28	850	0.9	91.939	-B820	50-P90/L4	
16	879	1.7	1.6	619	6.4	861	16	879	1.7	27	861	1.7	93.150	-B1500	50-P90/L4	
16	880	2.6	1.6	620	6.4	862	16	880	2.6	27	862	2.5	93.283	-B2700	50-P90/L4	
14	966	1.6	1.4	681	5.9	946	14	966	1.6	25	946	1.5	102.396	-B1500	50-P90/L4	
14	970	0.9	1.4	684	5.8	950	14	970	0.9	25	950	0.8	102.790	-B820	50-P90/L4	
13	1077	1.4	1.3	759	5.3	1055	13	1077	1.4	22	1055	1.4	114.166	-B1500	50-P90/L4	
12	1184	1.3	1.2	834	4.8	1160	12	1184	1.3	20	1160	1.3	125.498	-B1500	50-P90/L4	
10	1336	6.0	1.0	735	5.1	1336	10	1336	6.0				140.930	-B8000	40-P90/L4	
9.6	1415	1.1	1.0	997	4.0	1386	9.6	1415	1.1	17	1386	1.1	149.949	-B1500	50-P90/L4	
9.4	1445	2.9	0.9	1018	3.9	1415	9.4	1445	2.9	17	1415	3.0	153.141	-B4300	50-P90/L4	
9.4	1445	1.9	0.9	1019	3.9	1416	9.4	1445	1.9	17	1416	1.9	153.185	-B2700	50-P90/L4	
9.1	1503	5.3	0.9	827	4.6	1474	9.1	1503	5.3	16	1474	5.4	158.650	-B8000	40-P90/L4	
8.7	1555	1.0	0.9	1096	3.6	1523	8.7	1555	1.0	16	1523	1.0	164.833	-B1500	50-P90/L4	
8.6	1579	2.7	0.9	1113	3.6	1547	8.6	1579	2.7	15	1547	2.8	167.383	-B4300	50-P90/L4	
8.6	1587	1.7	0.9	1119	3.6	1555	8.6	1587	1.7	15	1555	1.7	168.230	-B2700	50-P90/L4	
8.1	1696	4.7	0.8	933	4.1	1663	8.1	1696	4.7	14	1663	4.8	178.970	-B8000	40-P90/L4	
7.9	1717	0.9	0.8	1210	3.3	1682	7.9	1717	0.9	14	1682	0.9	181.983	-B1500	50-P90/L4	
7.8	1754	2.5	0.8	1236	3.2	1718	7.8	1754	2.5	14	1718	2.5	185.857	-B4300	50-P90/L4	
7.8	1754	1.5	0.8	1236	3.2	1718	7.8	1754	1.5	14	1718	1.6	185.911	-B2700	50-P90/L4	
7.6	1809	4.4	0.8	995	3.8	1774	7.6	1809	4.4	13	1774	4.5	190.920	-B8000	40-P90/L4	

Selection tables, 4-pole motors

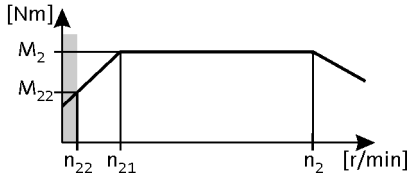

50 Hz: P_N = 1.5 kW
87 Hz: P_N = 2.6 kW

3-stage gearboxes

Mains operation 400 V, 50 Hz			Inverter operation 5 Hz -		- 20 ... 25 Hz		- 50 Hz (1:10)			- 87 Hz (1:17.4)			i	Product		
n_2 [r/min]	M_2 [Nm]	c	n_{22} [r/min]	M_{22} [Nm]	n_{21} [r/min]	M_2 [Nm]	n_2 [r/min]	M_2 [Nm]	c	n_2 [r/min]	M_2 [Nm]	c		g500	m5□□	
7.1	1922	4.2	0.7	1057	3.6	1885	7.1	1922	4.2	13	1885	4.3	202.860	-B8000	40-P90/L4	
7.1	1917	2.2	0.7	1351	3.0	1877	7.1	1917	2.2	13	1877	2.3	203.143	-B4300	50-P90/L4	
7.1	1926	1.4	0.7	1358	2.9	1887	7.1	1926	1.4	13	1887	1.4	204.170	-B2700	50-P90/L4	
6.1	2217	1.9	0.6	1562	2.6	2171	6.1	2217	1.9	11	2171	2.0	234.932	-B4300	50-P90/L4	
6.1	2217	1.2	0.6	1563	2.6	2172	6.1	2217	1.2	11	2172	1.2	235.000	-B2700	50-P90/L4	
6.1	2246	3.6	0.6	1236	3.1	2202	6.1	2246	3.6	11	2202	3.6	237.030	-B8000	40-P90/L4	
5.6	2423	1.8	0.6	1707	2.3	2373	5.6	2423	1.8	9.9	2373	1.8	256.781	-B4300	50-P90/L4	
5.6	2435	1.1	0.6	1716	2.3	2385	5.6	2435	1.1	9.9	2385	1.1	258.080	-B2700	50-P90/L4	

Selection tables, 4-pole motors

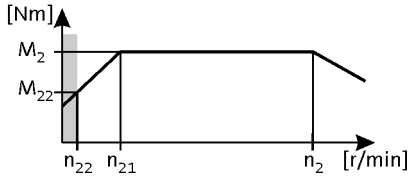

50 Hz: P_N = 2.2 kW
87 Hz: P_N = 3.9 kW

2-stage gearboxes

Mains operation 400 V, 50 Hz			Inverter operation 5 Hz -		- 20 ... 25 Hz		- 50 Hz (1:10)			- 87 Hz (1:17.4)			i	Product g500	Product m5□□	
n_2 [r/min]	M_2 [Nm]	c	n_{22} [r/min]	M_{22} [Nm]	n_{21} [r/min]	M_2 [Nm]	n_2 [r/min]	M_2 [Nm]	c	n_2 [r/min]	M_2 [Nm]	c				
407	49	2.8	41	34	168	49	407	49	2.8	719	49	2.4	3.565	-B240	50-P100/M4	
297	67	2.2	30	47	123	67	297	67	2.2	524	68	1.8	4.889	-B240	50-P100/M4	
232	86	1.8	23	60	96	86	232	86	1.8	410	86	1.5	6.257	-B240	50-P100/M4	
211	95	1.9	21	66	87	95	211	95	1.9				6.883	-B240	50-P100/M4	
186	107	1.7	19	75	77	107	186	107	1.7				7.817	-B240	50-P100/M4	
154	130	1.5	15	91	64	130	154	130	1.5				9.440	-B240	50-P100/M4	
135	147	1.4	14	103	56	147	135	147	1.4				10.720	-B240	50-P100/M4	
120	166	1.3	12	116	50	166	120	166	1.3				12.081	-B240	50-P100/M4	
106	189	1.2	11	132	44	189	106	189	1.2				13.719	-B240	50-P100/M4	
97	206	1.1	9.7	144	40	206	97	206	1.1				15.008	-B240	50-P100/M4	
86	232	1.0	8.6	162	36	232	86	232	1.0				16.857	-B240	50-P100/M4	
76	263	0.9	7.6	184	31	263	76	263	0.9				19.143	-B240	50-P100/M4	
70	284	0.9	7.0	198	29	284	70	284	0.9				20.650	-B240	50-P100/M4	

3-stage gearboxes

Mains operation 400 V, 50 Hz			Inverter operation 5 Hz -		- 20 ... 25 Hz		- 50 Hz (1:10)			- 87 Hz (1:17.4)			i	Product g500	Product m5□□	
n_2 [r/min]	M_2 [Nm]	c	n_{22} [r/min]	M_{22} [Nm]	n_{21} [r/min]	M_2 [Nm]	n_2 [r/min]	M_2 [Nm]	c	n_2 [r/min]	M_2 [Nm]	c				
293	68	4.6	29	48	121	68	293	68	4.6				4.958	-B820	50-P100/M4	
290	69	4.1	29	48	120	69	290	69	4.1	512	69	3.4	5.002	-B450	50-P100/M4	
287	70	5.4	29	49	118	70	287	70	5.4				5.067	-B600	50-P100/M4	
214	93	4.2	21	65	88	93	214	93	4.2	377	94	3.5	6.800	-B820	50-P100/M4	
212	94	3.3	21	66	88	94	212	94	3.3	374	95	2.7	6.860	-B450	50-P100/M4	
209	95	4.2	21	67	86	95	209	95	4.2	369	96	3.5	6.949	-B600	50-P100/M4	
191	105	4.4	19	73	79	105	191	105	4.4				7.617	-B600	50-P100/M4	
191	105	4.1	19	73	79	105	191	105	4.1				7.618	-B820	50-P100/M4	
171	117	3.9	17	82	71	117	171	117	3.9				8.517	-B820	50-P100/M4	
156	128	2.9	16	89	64	128	156	128	2.9	275	129	2.4	9.315	-B450	50-P100/M4	
153	131	3.8	15	91	63	131	153	131	3.8	269	131	3.2	9.520	-B820	50-P100/M4	
141	142	2.7	14	99	58	142	141	142	2.7	248	143	2.3	10.328	-B450	50-P100/M4	
139	144	3.7	14	100	57	144	139	144	3.7	245	144	3.1	10.447	-B820	50-P100/M4	
135	148	3.7	14	103	56	148	135	148	3.7				10.741	-B600	50-P100/M4	
124	161	3.5	12	112	51	161	124	161	3.5	219	161	3.0	11.680	-B820	50-P100/M4	
120	167	3.3	12	117	49	167	120	167	3.3	211	168	2.7	12.143	-B820	50-P100/M4	
114	176	2.3	11	123	47	176	114	176	2.3	201	176	1.9	12.775	-B450	50-P100/M4	
111	180	5.6	11	126	46	180	111	180	5.6	195	181	4.7	13.118	-B1500	50-P100/M4	
109	184	3.0	11	128	45	184	109	184	3.0	192	185	2.5	13.369	-B600	50-P100/M4	
109	184	3.4	11	128	45	184	109	184	3.4	192	185	2.8	13.370	-B820	50-P100/M4	
103	195	2.2	10	136	42	195	103	195	2.2	181	196	1.8	14.165	-B450	50-P100/M4	
99	201	3.3	9.9	140	41	201	99	201	3.3	175	202	2.7	14.626	-B820	50-P100/M4	

Selection tables, 4-pole motors

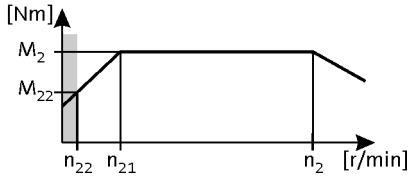

50 Hz: P_N = 2.2 kW
87 Hz: P_N = 3.9 kW

3-stage gearboxes

Mains operation 400 V, 50 Hz			Inverter operation 5 Hz -		- 20 ... 25 Hz		- 50 Hz (1:10)			- 87 Hz (1:17.4)			i	Product		
n_2 [r/min]	M_2 [Nm]	c	n_{22} [r/min]	M_{22} [Nm]	n_{21} [r/min]	M_2 [Nm]	n_2 [r/min]	M_2 [Nm]	c	n_2 [r/min]	M_2 [Nm]	c		g500	m5□□	
99	202	3.0	9.8	141	41	202	99	202	3.0				14.730	-B600	50-P100/M4	
89	225	1.9	8.9	157	37	225	89	225	1.9	157	226	1.6	16.349	-B450	50-P100/M4	
89	225	3.2	8.9	157	37	225	89	225	3.2	157	226	2.6	16.352	-B820	50-P100/M4	
81	246	1.8	8.1	172	34	246	81	246	1.8	143	247	1.5	17.885	-B450	50-P100/M4	
78	256	5.7	7.8	178	32	256	78	256	5.7	138	257	4.8	18.598	-B1500	50-P100/M4	
78	256	2.9	7.8	179	32	256	78	256	2.9	137	258	2.4	18.655	-B820	50-P100/M4	
77	259	2.3	7.7	181	32	259	77	259	2.3	136	260	1.9	18.851	-B600	50-P100/M4	
73	273	1.7	7.3	190	30	273	73	273	1.7	129	274	1.4	19.831	-B450	50-P100/M4	
71	281	5.3	7.1	196	29	281	71	281	5.3	125	282	4.5	20.444	-B1500	50-P100/M4	
70	283	2.1	7.0	198	29	283	70	283	2.1	124	285	1.8	20.622	-B600	50-P100/M4	
70	287	2.9	7.0	200	29	287	70	287	2.9	123	288	2.4	20.857	-B820	50-P100/M4	
64	314	1.4	6.4	219	26	314	64	314	1.4	112	315	1.2	22.813	-B450	50-P100/M4	
64	314	1.9	6.3	219	26	314	64	314	1.9	112	316	1.6	22.852	-B600	50-P100/M4	
64	314	2.6	6.3	219	26	314	64	314	2.6	112	316	2.2	22.853	-B820	50-P100/M4	
63	315	4.8	6.3	220	26	315	63	315	4.8	112	316	4.0	22.898	-B1500	50-P100/M4	
63	319	5.7	6.2	223	26	319	63	319	5.7	110	320	4.8	23.206	-B4300	50-P100/M4	
57	348	1.3	5.7	243	24	348	57	348	1.3	101	349	1.1	25.294	-B450	50-P100/M4	
57	348	1.7	5.7	243	24	348	57	348	1.7				25.347	-B600	50-P100/M4	
57	349	5.7	5.7	243	24	349	57	349	5.7	101	350	4.8	25.365	-B4300	50-P100/M4	
57	351	2.3	5.7	245	24	351	57	351	2.3	100	353	1.9	25.550	-B820	50-P100/M4	
56	358	1.7	5.6	250	23	358	56	358	1.7				26.061	-B600	50-P100/M4	
55	362	2.3	5.5	253	23	362	55	362	2.3				26.324	-B820	50-P100/M4	
54	369	5.7	5.4	257	22	369	54	369	5.7	96	370	4.8	26.814	-B2700	50-P100/M4	
52	384	1.2	5.2	268	22	384	52	384	1.2	92	386	1.0	27.945	-B450	50-P100/M4	
50	401	3.7	5.0	280	21	401	50	401	3.7	88	403	3.1	29.206	-B1500	50-P100/M4	
49	405	5.7	4.9	283	20	405	49	405	5.7	87	407	4.8	29.447	-B2700	50-P100/M4	
49	409	1.5	4.9	285	20	409	49	409	1.5	86	411	1.2	29.744	-B600	50-P100/M4	
49	409	2.0	4.9	285	20	409	49	409	2.0	86	411	1.7	29.745	-B820	50-P100/M4	
47	426	1.1	4.7	297	19	426	47	426	1.1	83	428	0.9	30.985	-B450	50-P100/M4	
45	444	1.9	4.5	310	19	444	45	444	1.9				32.291	-B820	50-P100/M4	
45	446	1.4	4.5	311	19	446	45	446	1.4				32.439	-B600	50-P100/M4	
45	447	3.4	4.5	312	18	447	45	447	3.4	79	449	2.8	32.547	-B1500	50-P100/M4	
41	491	1.2	4.1	343	17	491	41	491	1.2				35.740	-B600	50-P100/M4	
41	492	3.1	4.1	343	17	492	41	492	3.1	72	494	2.5	35.778	-B1500	50-P100/M4	
40	496	1.7	4.0	346	17	496	40	496	1.7				36.102	-B820	50-P100/M4	

Selection tables, 4-pole motors

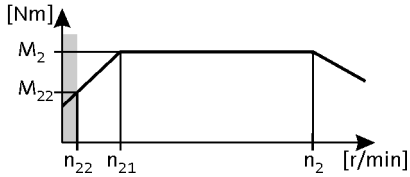

50 Hz: P_N = 2.2 kW
87 Hz: P_N = 3.9 kW

3-stage gearboxes

Mains operation 400 V, 50 Hz			Inverter operation 5 Hz -		- 20 ... 25 Hz		- 50 Hz (1:10)			- 87 Hz (1:17.4)			i	Product		
n_2 [r/min]	M_2 [Nm]	c	n_{22} [r/min]	M_{22} [Nm]	n_{21} [r/min]	M_2 [Nm]	n_2 [r/min]	M_2 [Nm]	c	n_2 [r/min]	M_2 [Nm]	c		g500	m5□□	
39	508	1.2	3.9	355	16	508	39	508	1.2	69	511	1.0	36.999	-B600	50-P100/M4	
39	508	1.6	3.9	355	16	508	39	508	1.6	69	511	1.3	37.000	-B820	50-P100/M4	
38	530	4.1	3.8	370	16	530	38	530	4.1	67	532	3.4	38.546	-B4300	50-P100/M4	
36	562	2.7	3.5	392	15	562	36	562	2.7				40.895	-B1500	50-P100/M4	
35	568	1.4	3.5	397	15	568	35	568	1.4				41.325	-B820	50-P100/M4	
35	576	1.0	3.5	402	14	576	35	576	1.0	61	579	1.0	41.940	-B600	50-P100/M4	
32	618	2.4	3.2	431	13	618	32	618	2.4				44.955	-B1500	50-P100/M4	
32	621	1.3	3.2	434	13	621	32	621	1.3				45.207	-B820	50-P100/M4	
32	629	1.0	3.2	439	13	629	32	629	1.0				45.739	-B600	50-P100/M4	
31	640	2.3	3.1	447	13	640	31	640	2.3	55	643	2.2	46.568	-B1500	50-P100/M4	
30	672	4.0	3.0	469	12	672	30	672	4.0	52	675	3.8	48.912	-B2700	50-P100/M4	
29	688	0.9	2.9	480	12	688	29	688	0.9				50.036	-B600	50-P100/M4	
29	695	1.2	2.9	485	12	695	29	695	1.2				50.543	-B820	50-P100/M4	
28	714	2.1	2.8	498	12	714	28	714	2.1	49	717	2.0	51.920	-B1500	50-P100/M4	
27	743	3.5	2.7	519	11	743	27	743	3.5	47	747	3.3	54.082	-B2700	50-P100/M4	
25	784	1.9	2.5	548	11	784	25	784	1.9	45	788	1.8	57.074	-B1500	50-P100/M4	
25	792	1.0	2.5	553	10	792	25	792	1.0				57.662	-B820	50-P100/M4	
25	803	1.9	2.5	561	10	803	25	803	1.9	44	807	1.8	58.422	-B1500	50-P100/M4	
25	806	5.3	2.5	563	10	806	25	806	5.3	44	810	5.1	58.671	-B4300	50-P100/M4	
24	816	3.3	2.4	570	10	816	24	816	3.3	43	820	3.1	59.393	-B2700	50-P100/M4	
23	881	4.9	2.3	615	9.4	881	23	881	4.9	40	885	4.6	64.127	-B4300	50-P100/M4	
23	883	1.7	2.3	616	9.3	883	23	883	1.7				64.221	-B1500	50-P100/M4	
23	886	3.1	2.2	618	9.3	886	23	886	3.1				64.452	-B2700	50-P100/M4	
23	886	0.9	2.2	619	9.3	886	23	886	0.9				64.468	-B820	50-P100/M4	
21	971	0.8	2.1	678	8.5	971	21	971	0.8				70.636	-B820	50-P100/M4	
20	984	1.5	2.0	687	8.4	984	20	984	1.5	36	988	1.4	71.566	-B1500	50-P100/M4	
19	1030	1.5	1.9	719	8.0	1030	19	1030	1.5	34	1035	1.4	74.963	-B1500	50-P100/M4	
19	1056	2.6	1.9	737	7.8	1056	19	1056	2.6	33	1061	2.4	76.862	-B2700	50-P100/M4	
18	1137	1.3	1.8	794	7.2	1137	18	1137	1.3	31	1143	1.3	82.762	-B1500	50-P100/M4	
17	1167	2.3	1.7	815	7.1	1167	17	1167	2.3	30	1173	2.2	84.940	-B2700	50-P100/M4	
16	1250	1.2	1.6	873	6.6	1250	16	1250	1.2	28	1256	1.1	90.978	-B1500	50-P100/M4	
16	1280	1.2	1.6	894	6.4	1280	16	1280	1.2	28	1286	1.1	93.150	-B1500	50-P100/M4	
16	1282	2.1	1.6	895	6.4	1282	16	1282	2.1	28	1288	2.0	93.283	-B2700	50-P100/M4	
15	1339	3.2	1.5	935	6.2	1339	15	1339	3.2	26	1346	3.0	97.453	-B4300	50-P100/M4	
15	1340	2.0	1.5	935	6.2	1340	15	1340	2.0	26	1346	1.9	97.481	-B2700	50-P100/M4	

Selection tables, 4-pole motors

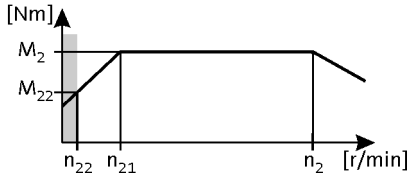

50 Hz: P_N = 2.2 kW
87 Hz: P_N = 3.9 kW

3-stage gearboxes

Mains operation 400 V, 50 Hz			Inverter operation 5 Hz -		- 20 ... 25 Hz		- 50 Hz (1:10)			- 87 Hz (1:17.4)			i	Product		
n_2 [r/min]	M_2 [Nm]	c	n_{22} [r/min]	M_{22} [Nm]	n_{21} [r/min]	M_2 [Nm]	n_2 [r/min]	M_2 [Nm]	c	n_2 [r/min]	M_2 [Nm]	c		g500	m5□□	
15	1368	5.9	1.5	753	7.4	1368	15	1368	5.9	26	1380	5.5	99.790	-B8000	40-P100/M4	
14	1407	1.1	1.4	982	5.9	1407	14	1407	1.1	25	1414	1.0	102.396	-B1500	50-P100/M4	
14	1464	2.9	1.4	1022	5.6	1464	14	1464	2.9	24	1471	2.8	106.517	-B4300	50-P100/M4	
14	1471	1.8	1.4	1027	5.6	1471	14	1471	1.8	24	1478	1.7	107.056	-B2700	50-P100/M4	
13	1545	5.2	1.3	850	6.5	1545	13	1545	5.2	23	1558	5.1	112.680	-B8000	40-P100/M4	
13	1569	1.0	1.3	1095	5.3	1569	13	1569	1.0	22	1576	1.0	114.166	-B1500	50-P100/M4	
12	1626	2.6	1.2	1135	5.1	1626	12	1626	2.6	22	1634	2.6	118.336	-B4300	50-P100/M4	
12	1627	1.7	1.2	1136	5.1	1627	12	1627	1.7	22	1634	1.7	118.370	-B2700	50-P100/M4	
12	1725	0.9	1.2	1204	4.8	1725	12	1725	0.9	20	1733	0.9	125.498	-B1500	50-P100/M4	
12	1743	4.6	1.1	959	5.8	1743	12	1743	4.6	20	1758	4.6	127.160	-B8000	40-P100/M4	
11	1778	2.4	1.1	1241	4.6	1778	11	1778	2.4	20	1786	2.4	129.342	-B4300	50-P100/M4	
11	1787	1.5	1.1	1247	4.6	1787	11	1787	1.5	20	1795	1.5	129.996	-B2700	50-P100/M4	
10	1932	4.1	1.0	1063	5.2	1932	10	1932	4.1	18	1949	4.1	140.930	-B8000	40-P100/M4	
9.5	2105	2.0	0.9	1469	3.9	2105	9.5	2105	2.0	17	2115	2.0	153.141	-B4300	50-P100/M4	
9.5	2105	1.3	0.9	1470	3.9	2105	9.5	2105	1.3	17	2115	1.3	153.185	-B2700	50-P100/M4	
9.2	2175	3.7	0.9	1196	4.6	2175	9.2	2175	3.7	16	2194	3.7	158.650	-B8000	40-P100/M4	
8.8	2280	5.7	0.9	1254	4.4	2280	8.8	2280	5.7	16	2300	5.7	166.310	-B13000	40-P100/M4	
8.7	2300	1.9	0.9	1606	3.6	2300	8.7	2300	1.9	15	2311	1.9	167.383	-B4300	50-P100/M4	
8.6	2312	1.2	0.9	1614	3.6	2312	8.6	2312	1.2	15	2323	1.2	168.230	-B2700	50-P100/M4	
8.2	2454	3.3	0.8	1350	4.1	2454	8.2	2454	3.3	14	2475	3.2	178.970	-B8000	40-P100/M4	
7.9	2539	5.1	0.8	1397	4.0	2539	7.9	2539	5.1	14	2561	5.1	185.230	-B13000	40-P100/M4	
7.8	2554	1.7	0.8	1783	3.2	2554	7.8	2554	1.7	14	2566	1.7	185.857	-B4300	50-P100/M4	
7.8	2555	1.1	0.8	1784	3.2	2555	7.8	2555	1.1	14	2567	1.1	185.911	-B2700	50-P100/M4	
7.7	2617	3.1	0.8	1440	3.8	2617	7.7	2617	3.1	14	2640	3.0	190.920	-B8000	40-P100/M4	
7.2	2781	2.9	0.7	1530	3.6	2781	7.2	2781	2.9	13	2805	2.9	202.860	-B8000	40-P100/M4	
7.1	2792	1.5	0.7	1949	3.0	2792	7.1	2792	1.5	13	2805	1.5	203.143	-B4300	50-P100/M4	
7.1	2806	1.0	0.7	1959	2.9	2806	7.1	2806	1.0	13	2819	1.0	204.170	-B2700	50-P100/M4	
7.0	2856	4.6	0.7	1571	3.5	2856	7.0	2856	4.6	12	2881	4.5	208.350	-B13000	40-P100/M4	
6.6	3061	4.3	0.6	1684	3.3	3061	6.6	3061	4.3	12	3087	4.2	223.300	-B13000	40-P100/M4	
6.2	3229	1.3	0.6	2254	2.6	3229	6.2	3229	1.3	11	3244	1.3	234.932	-B4300	50-P100/M4	
6.2	3230	0.8	0.6	2255	2.6	3230	6.2	3230	0.8	11	3245	0.8	235.000	-B2700	50-P100/M4	
6.2	3250	2.5	0.6	1787	3.1	3250	6.2	3250	2.5	11	3277	2.4	237.030	-B8000	40-P100/M4	
5.7	3529	1.2	0.6	2464	2.3	3529	5.7	3529	1.2	10	3546	1.2	256.781	-B4300	50-P100/M4	

Selection tables, 4-pole motors

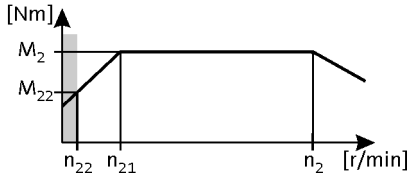

50 Hz: P_N = 3.0 kW
87 Hz: P_N = 5.2 kW

2-stage gearboxes

Mains operation 400 V, 50 Hz			Inverter operation 5 Hz -		- 20 ... 25 Hz		- 50 Hz (1:10)			- 87 Hz (1:17.4)			i	Product		
n_2 [r/min]	M_2 [Nm]	c	n_{22} [r/min]	M_{22} [Nm]	n_{21} [r/min]	M_2 [Nm]	n_2 [r/min]	M_2 [Nm]	c	n_2 [r/min]	M_2 [Nm]	c		g500	m5□□	
407	67	2.1	41	47	168	67	407	67	2.1				3.565	-B240	50-P100/L4	
296	92	1.6	30	64	123	92	296	92	1.6				4.889	-B240	50-P100/L4	
232	118	1.3	23	82	96	118	232	118	1.3				6.257	-B240	50-P100/L4	
211	129	1.4	21	90	87	129	211	129	1.4				6.883	-B240	50-P100/L4	
185	147	1.3	19	103	77	147	185	147	1.3				7.817	-B240	50-P100/L4	
154	177	1.1	15	124	64	177	154	177	1.1				9.440	-B240	50-P100/L4	
135	201	1.0	14	141	56	201	135	201	1.0				10.720	-B240	50-P100/L4	
120	227	0.9	12	158	50	227	120	227	0.9				12.081	-B240	50-P100/L4	
106	258	0.8	11	180	44	258	106	258	0.8				13.719	-B240	50-P100/L4	

3-stage gearboxes

Mains operation 400 V, 50 Hz			Inverter operation 5 Hz -		- 20 ... 25 Hz		- 50 Hz (1:10)			- 87 Hz (1:17.4)			i	Product		
n_2 [r/min]	M_2 [Nm]	c	n_{22} [r/min]	M_{22} [Nm]	n_{21} [r/min]	M_2 [Nm]	n_2 [r/min]	M_2 [Nm]	c	n_2 [r/min]	M_2 [Nm]	c		g500	m5□□	
292	93	3.4	29	65	121	93	292	93	3.4				4.958	-B820	50-P100/L4	
290	94	3.0	29	66	120	92	290	94	3.0	512	92	2.5	5.002	-B450	50-P100/L4	
286	95	4.0	29	66	118	95	286	95	4.0				5.067	-B600	50-P100/L4	
213	128	3.1	21	89	88	125	213	128	3.1	376	125	2.6	6.800	-B820	50-P100/L4	
211	129	2.4	21	90	88	126	211	129	2.4	373	126	2.0	6.860	-B450	50-P100/L4	
209	130	3.1	21	91	86	128	209	130	3.1	368	128	2.6	6.949	-B600	50-P100/L4	
190	143	3.2	19	100	79	143	190	143	3.2				7.617	-B600	50-P100/L4	
190	143	3.0	19	100	79	143	190	143	3.0				7.618	-B820	50-P100/L4	
170	160	2.9	17	112	71	160	170	160	2.9				8.517	-B820	50-P100/L4	
156	175	2.1	16	122	64	175	156	175	2.1				9.315	-B450	50-P100/L4	
152	179	2.8	15	125	63	175	152	179	2.8	269	175	2.4	9.520	-B820	50-P100/L4	
140	194	2.0	14	135	58	194	140	194	2.0				10.328	-B450	50-P100/L4	
139	196	2.7	14	137	57	196	139	196	2.7				10.447	-B820	50-P100/L4	
135	202	2.7	14	141	56	202	135	202	2.7				10.741	-B600	50-P100/L4	
124	219	2.6	12	153	51	219	124	219	2.6				11.680	-B820	50-P100/L4	
119	228	2.4	12	159	49	224	119	228	2.4	211	224	2.0	12.143	-B820	50-P100/L4	
113	240	1.7	11	168	47	240	113	240	1.7				12.775	-B450	50-P100/L4	
111	246	4.1	11	172	46	242	111	246	4.1	195	242	3.5	13.118	-B1500	50-P100/L4	
108	251	2.2	11	175	45	246	108	251	2.2	191	246	1.9	13.369	-B600	50-P100/L4	
108	251	2.5	11	175	45	246	108	251	2.5	191	246	2.1	13.370	-B820	50-P100/L4	
102	266	1.6	10	186	42	266	102	266	1.6				14.165	-B450	50-P100/L4	
99	275	2.4	9.9	192	41	270	99	275	2.4	175	270	2.0	14.626	-B820	50-P100/L4	
98	277	2.2	9.8	193	41	277	98	277	2.2				14.730	-B600	50-P100/L4	
89	307	1.4	8.9	214	37	301	89	307	1.4	157	301	1.2	16.349	-B450	50-P100/L4	
89	307	2.3	8.9	214	37	301	89	307	2.3	157	301	2.0	16.352	-B820	50-P100/L4	
81	336	1.3	8.1	234	34	330	81	336	1.3	143	330	1.1	17.885	-B450	50-P100/L4	

Selection tables, 4-pole motors

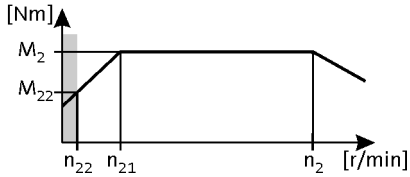

50 Hz: P_N = 3.0 kW
87 Hz: P_N = 5.2 kW

3-stage gearboxes

Mains operation 400 V, 50 Hz			Inverter operation 5 Hz -		- 20 ... 25 Hz		- 50 Hz (1:10)			- 87 Hz (1:17.4)			i	Product		
n_2 [r/min]	M_2 [Nm]	c	n_{22} [r/min]	M_{22} [Nm]	n_{21} [r/min]	M_2 [Nm]	n_2 [r/min]	M_2 [Nm]	c	n_2 [r/min]	M_2 [Nm]	c		g500	m5□□	
78	349	4.2	7.8	244	32	343	78	349	4.2	138	343	3.6	18.598	-B1500	50-P100/L4	
78	350	2.1	7.8	245	32	344	78	350	2.1	137	344	1.8	18.655	-B820	50-P100/L4	
77	354	1.7	7.7	247	32	354	77	354	1.7				18.851	-B600	50-P100/L4	
73	372	1.2	7.3	260	30	372	73	372	1.2				19.831	-B450	50-P100/L4	
71	384	3.9	7.1	268	29	377	71	384	3.9	125	377	3.3	20.444	-B1500	50-P100/L4	
70	387	1.6	7.0	270	29	387	70	387	1.6				20.622	-B600	50-P100/L4	
70	392	2.1	7.0	273	29	384	70	392	2.1	123	384	1.8	20.857	-B820	50-P100/L4	
64	428	1.1	6.4	299	26	420	64	428	1.1	112	420	0.9	22.813	-B450	50-P100/L4	
63	429	1.4	6.3	300	26	421	63	429	1.4	112	421	1.2	22.852	-B600	50-P100/L4	
63	429	1.9	6.3	300	26	421	63	429	1.9	112	421	1.6	22.853	-B820	50-P100/L4	
63	430	3.5	6.3	300	26	422	63	430	3.5	112	422	3.0	22.898	-B1500	50-P100/L4	
62	436	4.2	6.2	304	26	428	62	436	4.2	110	428	3.6	23.206	-B4300	50-P100/L4	
57	475	1.0	5.7	332	24	475	57	475	1.0				25.294	-B450	50-P100/L4	
57	476	1.3	5.7	332	24	476	57	476	1.3				25.347	-B600	50-P100/L4	
57	476	4.2	5.7	333	24	468	57	476	4.2	101	468	3.6	25.365	-B4300	50-P100/L4	
57	480	1.7	5.7	335	24	471	57	480	1.7	100	471	1.5	25.550	-B820	50-P100/L4	
56	489	1.2	5.6	342	23	489	56	489	1.2				26.061	-B600	50-P100/L4	
55	494	1.7	5.5	345	23	494	55	494	1.7				26.324	-B820	50-P100/L4	
54	504	4.2	5.4	352	22	494	54	504	4.2	95	494	3.6	26.814	-B2700	50-P100/L4	
52	525	0.9	5.2	366	22	525	52	525	0.9				27.945	-B450	50-P100/L4	
50	548	2.7	5.0	383	21	538	50	548	2.7	88	538	2.3	29.206	-B1500	50-P100/L4	
49	553	4.2	4.9	386	20	543	49	553	4.2	87	543	3.6	29.447	-B2700	50-P100/L4	
49	559	1.1	4.9	390	20	548	49	559	1.1	86	548	0.9	29.744	-B600	50-P100/L4	
49	559	1.5	4.9	390	20	548	49	559	1.5	86	548	1.3	29.745	-B820	50-P100/L4	
45	606	1.4	4.5	423	19	606	45	606	1.4				32.291	-B820	50-P100/L4	
45	609	1.0	4.5	425	19	609	45	609	1.0				32.439	-B600	50-P100/L4	
45	611	2.5	4.5	427	18	600	45	611	2.5	79	600	2.1	32.547	-B1500	50-P100/L4	
41	671	0.9	4.1	469	17	671	41	671	0.9				35.740	-B600	50-P100/L4	
41	672	2.2	4.1	469	17	659	41	672	2.2	72	659	1.9	35.778	-B1500	50-P100/L4	
40	678	1.2	4.0	473	17	678	40	678	1.2				36.102	-B820	50-P100/L4	
39	695	0.9	3.9	485	16	695	39	695	0.9				36.999	-B600	50-P100/L4	
39	695	1.2	3.9	485	16	682	39	695	1.2	69	682	1.0	37.000	-B820	50-P100/L4	
38	724	3.0	3.8	505	16	710	38	724	3.0	66	710	2.6	38.546	-B4300	50-P100/L4	
35	768	2.0	3.5	536	15	768	35	768	2.0				40.895	-B1500	50-P100/L4	
35	776	1.1	3.5	542	15	776	35	776	1.1				41.325	-B820	50-P100/L4	

Selection tables, 4-pole motors

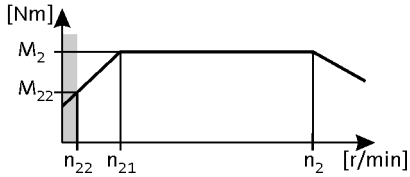

50 Hz: P_N = 3.0 kW
87 Hz: P_N = 5.2 kW

3-stage gearboxes

Mains operation 400 V, 50 Hz			Inverter operation 5 Hz -		- 20 ... 25 Hz		- 50 Hz (1:10)			- 87 Hz (1:17.4)			i	Product		
n_2 [r/min]	M_2 [Nm]	c	n_{22} [r/min]	M_{22} [Nm]	n_{21} [r/min]	M_2 [Nm]	n_2 [r/min]	M_2 [Nm]	c	n_2 [r/min]	M_2 [Nm]	c		g500	m5□□	
32	844	1.8	3.2	589	13	844	32	844	1.8				44.955	-B1500	50-P100/L4	
32	849	1.0	3.2	593	13	849	32	849	1.0				45.207	-B820	50-P100/L4	
31	875	1.7	3.1	610	13	858	31	875	1.7	55	858	1.7	46.568	-B1500	50-P100/L4	
30	919	2.9	3.0	641	12	902	30	919	2.9	52	902	2.9	48.912	-B2700	50-P100/L4	
29	949	0.9	2.9	663	12	949	29	949	0.9				50.543	-B820	50-P100/L4	
28	975	1.5	2.8	681	12	957	28	975	1.5	49	957	1.5	51.920	-B1500	50-P100/L4	
27	1016	2.6	2.7	709	11	1016	27	1016	2.6	47	997	2.5	54.082	-B2700	50-P100/L4	
25	1072	1.4	2.5	748	11	1052	25	1072	1.4	45	1052	1.4	57.074	-B1500	50-P100/L4	
25	1097	1.4	2.5	766	10	1097	25	1097	1.4				58.422	-B1500	50-P100/L4	
25	1102	3.9	2.5	769	10	1081	25	1102	3.9	44	1081	3.8	58.671	-B4300	50-P100/L4	
24	1115	2.4	2.4	779	10	1095	24	1115	2.4	43	1095	2.4	59.393	-B2700	50-P100/L4	
23	1204	3.6	2.3	841	9.4	1182	23	1204	3.6	40	1182	3.5	64.127	-B4300	50-P100/L4	
23	1206	1.2	2.3	842	9.3	1206	23	1206	1.2				64.221	-B1500	50-P100/L4	
23	1210	2.2	2.2	845	9.3	1210	23	1210	2.2				64.452	-B2700	50-P100/L4	
20	1344	1.1	2.0	938	8.4	1344	20	1344	1.1				71.566	-B1500	50-P100/L4	
19	1408	1.1	1.9	983	8.0	1382	19	1408	1.1	34	1382	1.0	74.963	-B1500	50-P100/L4	
19	1443	1.9	1.9	1008	7.8	1417	19	1443	1.9	33	1417	1.8	76.862	-B2700	50-P100/L4	
18	1493	5.4	1.8	821	9.2	1470	18	1493	5.4	32	1470	5.2	79.590	-B8000	40-P100/L4	
18	1554	1.0	1.8	1085	7.2	1525	18	1554	1.0	31	1525	0.9	82.762	-B1500	50-P100/L4	
17	1595	1.7	1.7	1113	7.1	1566	17	1595	1.7	30	1566	1.6	84.940	-B2700	50-P100/L4	
16	1666	4.8	1.6	916	8.2	1640	16	1666	4.8	29	1640	4.6	88.810	-B8000	40-P100/L4	
16	1709	0.9	1.6	1193	6.6	1677	16	1709	0.9	28	1677	0.9	90.978	-B1500	50-P100/L4	
16	1749	0.9	1.6	1221	6.4	1749	16	1749	0.9				93.150	-B1500	50-P100/L4	
16	1752	1.5	1.6	1223	6.4	1719	16	1752	1.5	27	1719	1.5	93.283	-B2700	50-P100/L4	
15	1830	2.4	1.5	1277	6.2	1796	15	1830	2.4	26	1796	2.3	97.453	-B4300	50-P100/L4	
15	1831	1.5	1.5	1278	6.2	1797	15	1831	1.5	26	1797	1.4	97.481	-B2700	50-P100/L4	
15	1872	4.3	1.5	1030	7.3	1843	15	1872	4.3	26	1843	4.1	99.790	-B8000	40-P100/L4	
14	2000	2.2	1.4	1396	5.6	1963	14	2000	2.2	24	1963	2.1	106.517	-B4300	50-P100/L4	
14	2010	1.3	1.4	1403	5.6	2010	14	2010	1.3				107.056	-B2700	50-P100/L4	
13	2114	3.8	1.3	1163	6.5	2081	13	2114	3.8	23	2081	3.8	112.680	-B8000	40-P100/L4	
12	2222	1.9	1.2	1551	5.1	2181	12	2222	1.9	22	2181	2.0	118.336	-B4300	50-P100/L4	
12	2223	1.2	1.2	1552	5.1	2182	12	2223	1.2	22	2182	1.2	118.370	-B2700	50-P100/L4	
12	2248	5.8	1.2	1236	6.1	2213	12	2248	5.8	21	2213	5.9	119.830	-B13000	40-P100/L4	
12	2385	3.4	1.1	1312	5.7	2349	12	2385	3.4	20	2349	3.4	127.160	-B8000	40-P100/L4	
11	2429	1.8	1.1	1695	4.6	2384	11	2429	1.8	20	2384	1.8	129.342	-B4300	50-P100/L4	

Selection tables, 4-pole motors

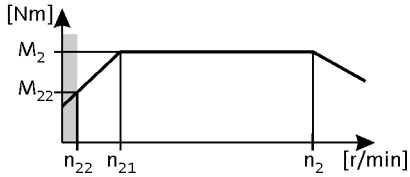

50 Hz: P_N = 3.0 kW
87 Hz: P_N = 5.2 kW

3-stage gearboxes

Mains operation 400 V, 50 Hz			Inverter operation 5 Hz -		- 20 ... 25 Hz		- 50 Hz (1:10)			- 87 Hz (1:17.4)			i	Product		
n_2 [r/min]	M_2 [Nm]	c	n_{22} [r/min]	M_{22} [Nm]	n_{21} [r/min]	M_2 [Nm]	n_2 [r/min]	M_2 [Nm]	c	n_2 [r/min]	M_2 [Nm]	c		g500	m5□□	
11	2441	1.1	1.1	1704	4.6	2396	11	2441	1.1	20	2396	1.1	129.996	-B2700	50-P100/L4	
11	2481	5.2	1.1	1364	5.5	2443	11	2481	5.2	19	2443	5.3	132.240	-B13000	40-P100/L4	
10	2644	3.0	1.0	1454	5.2	2603	10	2644	3.0	18	2603	3.1	140.930	-B8000	40-P100/L4	
9.7	2824	4.6	1.0	1553	4.8	2781	9.7	2824	4.6	17	2781	4.7	150.550	-B13000	40-P100/L4	
9.5	2876	1.5	0.9	2007	3.9	2823	9.5	2876	1.5	17	2823	1.5	153.141	-B4300	50-P100/L4	
9.5	2877	0.9	0.9	2008	3.9	2823	9.5	2877	0.9	17	2823	1.0	153.185	-B2700	50-P100/L4	
9.2	2976	2.7	0.9	1637	4.6	2930	9.2	2976	2.7	16	2930	2.7	158.650	-B8000	40-P100/L4	
8.8	3120	4.2	0.9	1716	4.4	3072	8.8	3120	4.2	16	3072	4.2	166.310	-B13000	40-P100/L4	
8.7	3143	1.4	0.9	2194	3.6	3085	8.7	3143	1.4	15	3085	1.4	167.383	-B4300	50-P100/L4	
8.6	3159	0.9	0.9	2205	3.6	3101	8.6	3159	0.9	15	3101	0.9	168.230	-B2700	50-P100/L4	
8.2	3357	2.4	0.8	1847	4.1	3306	8.2	3357	2.4	14	3306	2.4	178.970	-B8000	40-P100/L4	
7.9	3475	3.7	0.8	1911	3.9	3421	7.9	3475	3.7	14	3421	3.8	185.230	-B13000	40-P100/L4	
7.8	3490	1.2	0.8	2436	3.2	3426	7.8	3490	1.2	14	3426	1.3	185.857	-B4300	50-P100/L4	
7.6	3581	2.2	0.8	1970	3.8	3527	7.6	3581	2.2	14	3527	2.3	190.920	-B8000	40-P100/L4	
7.2	3805	2.1	0.7	2093	3.6	3747	7.2	3805	2.1	13	3747	2.1	202.860	-B8000	40-P100/L4	
7.1	3815	1.1	0.7	2663	3.0	3744	7.1	3815	1.1	13	3744	1.2	203.143	-B4300	50-P100/L4	
7.0	3908	3.3	0.7	2150	3.5	3849	7.0	3908	3.3	12	3849	3.4	208.350	-B13000	40-P100/L4	
6.5	4189	3.1	0.6	2304	3.3	4125	6.5	4189	3.1	12	4125	3.2	223.300	-B13000	40-P100/L4	
6.2	4412	1.0	0.6	3080	2.6	4330	6.2	4412	1.0	11	4330	1.0	234.932	-B4300	50-P100/L4	
6.2	4446	1.8	0.6	2446	3.1	4378	6.2	4446	1.8	11	4378	1.8	237.030	-B8000	40-P100/L4	
5.6	4822	0.9	0.6	3366	2.3	4733	5.6	4822	0.9	10	4733	0.9	256.781	-B4300	50-P100/L4	

Selection tables, 4-pole motors

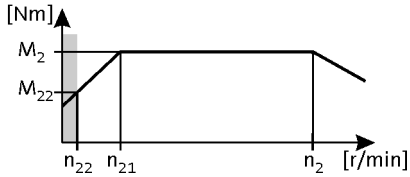

50 Hz: P_N = 4.0 kW
87 Hz: P_N = 7.35 kW

3-stage gearboxes

Mains operation 400 V, 50 Hz			Inverter operation 5 Hz -		- 20 ... 25 Hz		- 50 Hz (1:10)			- 87 Hz (1:17.4)			i	Product		
n_2 [r/min]	M_2 [Nm]	c	n_{22} [r/min]	M_{22} [Nm]	n_{21} [r/min]	M_2 [Nm]	n_2 [r/min]	M_2 [Nm]	c	n_2 [r/min]	M_2 [Nm]	c		g500	m5□□	
293	124	2.5	29	77	121	124	293	124	2.5				4.958	-B820	50-P112/M4	
291	125	2.2	29	78	120	125	291	125	2.2				5.002	-B450	50-P112/M4	
287	127	3.0	29	79	118	127	287	127	3.0				5.067	-B600	50-P112/M4	
214	170	2.3	21	106	88	170	214	170	2.3				6.800	-B820	50-P112/M4	
212	171	1.8	21	107	88	171	212	171	1.8				6.860	-B450	50-P112/M4	
212	171	4.2	21	107	87	171	212	171	4.2				6.866	-B1500	50-P112/M4	
209	174	2.3	21	108	86	174	209	174	2.3				6.949	-B600	50-P112/M4	
191	190	2.4	19	119	79	190	191	190	2.4				7.617	-B600	50-P112/M4	
191	190	2.2	19	119	79	190	191	190	2.2				7.618	-B820	50-P112/M4	
171	213	2.2	17	133	71	213	171	213	2.2				8.517	-B820	50-P112/M4	
159	229	4.8	16	143	66	229	159	229	4.8				9.156	-B4300	50-P112/M4	
156	233	1.6	16	145	64	233	156	233	1.6				9.315	-B450	50-P112/M4	
153	238	4.2	15	148	63	238	153	238	4.2				9.516	-B1500	50-P112/M4	
153	238	2.1	15	148	63	238	153	238	2.1	269	247	1.7	9.520	-B820	50-P112/M4	
141	258	1.5	14	161	58	258	141	258	1.5				10.328	-B450	50-P112/M4	
139	261	2.0	14	163	57	261	139	261	2.0				10.447	-B820	50-P112/M4	
135	268	2.0	14	167	56	268	135	268	2.0				10.741	-B600	50-P112/M4	
133	272	4.2	13	170	55	272	133	272	4.2				10.902	-B1500	50-P112/M4	
124	292	2.0	12	182	51	292	124	292	2.0				11.680	-B820	50-P112/M4	
121	299	4.2	12	187	50	299	121	299	4.2				11.985	-B1500	50-P112/M4	
120	303	1.8	12	189	49	303	120	303	1.8	211	316	1.4	12.143	-B820	50-P112/M4	
114	319	1.3	11	199	47	319	114	319	1.3				12.775	-B450	50-P112/M4	
111	328	3.4	11	204	46	328	111	328	3.4	196	341	2.7	13.118	-B1500	50-P112/M4	
109	334	1.7	11	208	45	334	109	334	1.7				13.369	-B600	50-P112/M4	
109	334	1.9	11	208	45	334	109	334	1.9				13.370	-B820	50-P112/M4	
103	354	1.2	10	221	42	354	103	354	1.2				14.165	-B450	50-P112/M4	
99	365	1.8	9.9	228	41	365	99	365	1.8				14.626	-B820	50-P112/M4	
99	368	1.6	9.8	230	41	368	99	368	1.6				14.730	-B600	50-P112/M4	
96	377	4.0	9.6	235	40	377	96	377	4.0				15.111	-B1500	50-P112/M4	
89	408	1.1	8.9	255	37	408	89	408	1.1				16.349	-B450	50-P112/M4	
89	408	1.7	8.9	255	37	408	89	408	1.7				16.352	-B820	50-P112/M4	
88	415	3.6	8.7	259	36	415	88	415	3.6				16.611	-B1500	50-P112/M4	
86	422	4.8	8.6	264	36	422	86	422	4.8				16.913	-B4300	50-P112/M4	
81	447	1.0	8.1	279	34	447	81	447	1.0				17.885	-B450	50-P112/M4	
79	462	4.8	7.8	288	33	462	79	462	4.8				18.486	-B4300	50-P112/M4	

Selection tables, 4-pole motors

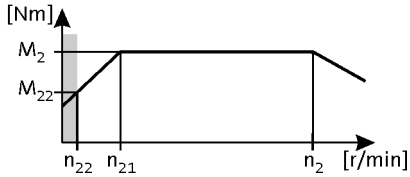

50 Hz: P_N = 4.0 kW
87 Hz: P_N = 7.35 kW

3-stage gearboxes

Mains operation 400 V, 50 Hz			Inverter operation 5 Hz -		- 20 ... 25 Hz		- 50 Hz (1:10)			- 87 Hz (1:17.4)			i	Product		
n_2 [r/min]	M_2 [Nm]	c	n_{22} [r/min]	M_{22} [Nm]	n_{21} [r/min]	M_2 [Nm]	n_2 [r/min]	M_2 [Nm]	c	n_2 [r/min]	M_2 [Nm]	c		g500	m5□□	
78	464	3.2	7.8	290	32	464	78	464	3.2				18.598	-B1500	50-P112/M4	
78	466	1.6	7.8	291	32	466	78	466	1.6	138	485	1.3	18.655	-B820	50-P112/M4	
77	471	1.3	7.7	294	32	471	77	471	1.3				18.851	-B600	50-P112/M4	
74	488	4.8	7.4	304	31	488	74	488	4.8				19.542	-B2700	50-P112/M4	
73	495	0.9	7.3	309	30	495	73	495	0.9				19.831	-B450	50-P112/M4	
71	511	2.9	7.1	319	29	511	71	511	2.9				20.444	-B1500	50-P112/M4	
71	515	1.2	7.0	321	29	515	71	515	1.2				20.622	-B600	50-P112/M4	
70	521	1.6	7.0	325	29	521	70	521	1.6	123	542	1.3	20.857	-B820	50-P112/M4	
69	526	4.4	6.9	328	29	526	69	526	4.4				21.065	-B4300	50-P112/M4	
65	556	4.4	6.5	347	27	556	65	556	4.4				22.269	-B2700	50-P112/M4	
64	571	1.1	6.3	356	26	571	64	571	1.1				22.852	-B600	50-P112/M4	
64	571	1.4	6.3	356	26	571	64	571	1.4	112	594	1.2	22.853	-B820	50-P112/M4	
64	572	2.6	6.3	357	26	572	64	572	2.6				22.898	-B1500	50-P112/M4	
63	579	3.8	6.2	362	26	579	63	579	3.8	111	603	3.1	23.206	-B4300	50-P112/M4	
61	599	2.5	6.0	373	25	599	61	599	2.5				23.973	-B1500	50-P112/M4	
59	611	4.4	5.9	381	25	611	59	611	4.4				24.456	-B2700	50-P112/M4	
57	633	1.0	5.7	395	24	633	57	633	1.0				25.347	-B600	50-P112/M4	
57	633	3.8	5.7	395	24	633	57	633	3.8	101	659	3.1	25.365	-B4300	50-P112/M4	
57	638	1.3	5.7	398	24	638	57	638	1.3	100	664	1.0	25.550	-B820	50-P112/M4	
55	657	1.3	5.5	410	23	657	55	657	1.3				26.324	-B820	50-P112/M4	
55	658	2.3	5.5	411	23	658	55	658	2.3				26.353	-B1500	50-P112/M4	
54	670	3.8	5.4	418	22	670	54	670	3.8				26.814	-B2700	50-P112/M4	
50	729	2.1	5.0	455	21	729	50	729	2.1	88	759	1.7	29.206	-B1500	50-P112/M4	
49	735	3.7	4.9	459	20	735	49	735	3.7				29.447	-B2700	50-P112/M4	
49	743	0.8	4.9	463	20	743	49	743	0.8				29.744	-B600	50-P112/M4	
49	743	1.1	4.9	463	20	743	49	743	1.1	86	773	0.9	29.745	-B820	50-P112/M4	
47	776	3.3	4.7	484	19	776	47	776	3.3	83	808	2.6	31.097	-B4300	50-P112/M4	
45	806	1.0	4.5	503	19	806	45	806	1.0				32.291	-B820	50-P112/M4	
45	813	1.9	4.5	507	18	813	45	813	1.9	79	846	1.5	32.547	-B1500	50-P112/M4	
44	821	3.3	4.4	512	18	821	44	821	3.3	78	854	2.6	32.873	-B2700	50-P112/M4	
41	893	1.7	4.1	557	17	893	41	893	1.7	72	930	1.4	35.778	-B1500	50-P112/M4	
40	901	3.0	4.0	562	17	901	40	901	3.0	71	938	2.4	36.102	-B2700	50-P112/M4	
40	901	0.9	4.0	562	17	901	40	901	0.9				36.102	-B820	50-P112/M4	
40	912	1.6	4.0	569	16	912	40	912	1.6				36.526	-B1500	50-P112/M4	
38	963	2.6	3.8	601	16	1002	38	963	2.6	67	1002	2.1	38.546	-B4300	50-P112/M4	

Selection tables, 4-pole motors

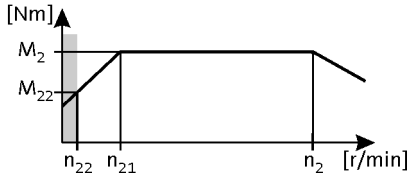

50 Hz: P_N = 4.0 kW
87 Hz: P_N = 7.35 kW

3-stage gearboxes

Mains operation 400 V, 50 Hz			Inverter operation 5 Hz -		- 20 ... 25 Hz		- 50 Hz (1:10)			- 87 Hz (1:17.4)			i	Product		
n_2 [r/min]	M_2 [Nm]	c	n_{22} [r/min]	M_{22} [Nm]	n_{21} [r/min]	M_2 [Nm]	n_2 [r/min]	M_2 [Nm]	c	n_2 [r/min]	M_2 [Nm]	c		g500	m5□□	
36	1021	1.5	3.5	637	15	1021	36	1021	1.5				40.895	-B1500	50-P112/M4	
34	1068	4.0	3.4	666	14	1068	34	1068	4.0				42.760	-B4300	50-P112/M4	
34	1068	2.5	3.4	666	14	1068	34	1068	2.5				42.772	-B2700	50-P112/M4	
32	1123	1.3	3.2	700	13	1123	32	1123	1.3				44.955	-B1500	50-P112/M4	
31	1163	1.3	3.1	725	13	1163	31	1163	1.3	55	1210	1.2	46.568	-B1500	50-P112/M4	
31	1167	3.7	3.1	728	13	1167	31	1167	3.7				46.737	-B4300	50-P112/M4	
31	1173	2.3	3.1	732	13	1173	31	1173	2.3				46.973	-B2700	50-P112/M4	
30	1221	2.2	3.0	762	12	1221	30	1221	2.2	52	1271	2.0	48.912	-B2700	50-P112/M4	
28	1296	1.2	2.8	809	12	1296	28	1296	1.2	49	1349	1.1	51.920	-B1500	50-P112/M4	
27	1330	3.2	2.7	830	11	1330	27	1330	3.2				53.258	-B4300	50-P112/M4	
27	1350	2.0	2.7	843	11	1350	27	1350	2.0	47	1406	1.8	54.082	-B2700	50-P112/M4	
27	1370	5.8	2.6	753	13	1370	27	1370	5.8	47	1430	5.3	54.760	-B8000	40-P112/M4	
26	1425	1.1	2.5	889	11	1425	26	1425	1.1	45	1483	1.0	57.074	-B1500	50-P112/M4	
25	1459	1.0	2.5	910	10	1459	25	1459	1.0				58.422	-B1500	50-P112/M4	
25	1465	2.9	2.5	914	10	1465	25	1465	2.9				58.671	-B4300	50-P112/M4	
25	1483	1.8	2.4	925	10	1483	25	1483	1.8	43	1544	1.7	59.393	-B2700	50-P112/M4	
23	1558	5.1	2.3	857	12	1558	23	1558	5.1	41	1626	4.7	62.280	-B8000	40-P112/M4	
23	1601	2.7	2.3	999	9.4	1601	23	1601	2.7				64.127	-B4300	50-P112/M4	
23	1604	0.9	2.3	1000	9.3	1604	23	1604	0.9				64.221	-B1500	50-P112/M4	
23	1609	1.7	2.2	1004	9.3	1609	23	1609	1.7				64.452	-B2700	50-P112/M4	
21	1765	4.5	2.1	971	10	1765	21	1765	4.5	36	1842	4.1	70.560	-B8000	40-P112/M4	
20	1787	0.8	2.0	1115	8.4	1787	20	1787	0.8				71.566	-B1500	50-P112/M4	
20	1796	2.4	2.0	1121	8.3	1796	20	1796	2.4	36	1870	2.2	71.930	-B4300	50-P112/M4	
20	1797	1.5	2.0	1121	8.3	1797	20	1797	1.5				71.951	-B2700	50-P112/M4	
19	1919	1.4	1.9	1197	7.8	1919	19	1919	1.4	33	1998	1.3	76.862	-B2700	50-P112/M4	
19	1963	2.2	1.8	1225	7.6	1963	19	1963	2.2	33	2043	2.0	78.619	-B4300	50-P112/M4	
18	1991	4.0	1.8	1095	9.2	1991	18	1991	4.0	32	2078	3.7	79.590	-B8000	40-P112/M4	
17	2121	1.3	1.7	1323	7.1	2121	17	2121	1.3	30	2208	1.2	84.940	-B2700	50-P112/M4	
16	2221	3.6	1.6	1222	8.2	2221	16	2221	3.6	29	2319	3.3	88.810	-B8000	40-P112/M4	
16	2329	1.2	1.6	1453	6.4	2329	16	2329	1.2	28	2425	1.1	93.283	-B2700	50-P112/M4	
15	2397	5.4	1.5	1318	7.6	2397	15	2397	5.4	27	2502	4.9	95.830	-B13000	40-P112/M4	
15	2433	1.8	1.5	1518	6.2	2433	15	2433	1.8	26	2533	1.6	97.453	-B4300	50-P112/M4	
15	2434	1.1	1.5	1519	6.2	2434	15	2434	1.1				97.481	-B2700	50-P112/M4	
15	2496	3.2	1.5	1373	7.3	2496	15	2496	3.2	26	2605	2.9	99.790	-B8000	40-P112/M4	
14	2660	1.6	1.4	1659	5.6	2660	14	2660	1.6	24	2769	1.5	106.517	-B4300	50-P112/M4	

Selection tables, 4-pole motors

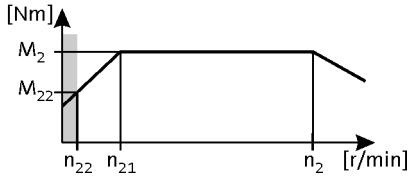

50 Hz: P_N = 4.0 kW
87 Hz: P_N = 7.35 kW

3-stage gearboxes

Mains operation 400 V, 50 Hz			Inverter operation 5 Hz -		- 20 ... 25 Hz		- 50 Hz (1:10)			- 87 Hz (1:17.4)			i	Product		
n_2 [r/min]	M_2 [Nm]	c	n_{22} [r/min]	M_{22} [Nm]	n_{21} [r/min]	M_2 [Nm]	n_2 [r/min]	M_2 [Nm]	c	n_2 [r/min]	M_2 [Nm]	c		g500	m5□□	
14	2669	4.9	1.4	1468	6.8	2669	14	2669	4.9	24	2786	4.4	106.720	-B13000	40-P112/M4	
14	2673	1.0	1.4	1668	5.6	2673	14	2673	1.0				107.056	-B2700	50-P112/M4	
13	2818	2.8	1.3	1550	6.5	2818	13	2818	2.8	23	2942	2.7	112.680	-B8000	40-P112/M4	
12	2955	1.5	1.2	1843	5.1	2955	12	2955	1.5	22	3076	1.4	118.336	-B4300	50-P112/M4	
12	2956	0.9	1.2	1844	5.1	2956	12	2956	0.9				118.370	-B2700	50-P112/M4	
12	2997	4.3	1.2	1649	6.1	2997	12	2997	4.3	21	3129	4.2	119.830	-B13000	40-P112/M4	
12	3180	2.5	1.1	1749	5.7	3180	12	3180	2.5	20	3320	2.4	127.160	-B8000	40-P112/M4	
11	3230	1.3	1.1	2015	4.6	3230	11	3230	1.3	20	3362	1.3	129.342	-B4300	50-P112/M4	
11	3246	0.8	1.1	2025	4.6	3246	11	3246	0.8				129.996	-B2700	50-P112/M4	
11	3253	6.0	1.1	1789	5.6	3253	11	3253	6.0	20	3395	5.7	130.050	-B20000	40-P112/M4	
11	3307	3.9	1.1	1819	5.5	3307	11	3307	3.9	19	3453	3.8	132.240	-B13000	40-P112/M4	
10	3525	2.3	1.0	1939	5.2	3525	10	3525	2.3	18	3679	2.2	140.930	-B8000	40-P112/M4	
10	3559	5.5	1.0	1957	5.1	3559	10	3559	5.5	18	3715	5.3	142.280	-B20000	40-P112/M4	
9.7	3765	3.5	1.0	2071	4.8	3765	9.7	3765	3.5	17	3931	3.3	150.550	-B13000	40-P112/M4	
9.5	3824	1.1	0.9	2386	3.9	3824	9.5	3824	1.1	17	3980	1.1	153.141	-B4300	50-P112/M4	
9.2	3968	2.0	0.9	2183	4.6	3968	9.2	3968	2.0	16	4142	1.9	158.650	-B8000	40-P112/M4	
9.1	4026	4.8	0.9	2215	4.5	4026	9.1	4026	4.8	16	4203	4.6	160.980	-B20000	40-P112/M4	
8.8	4160	3.1	0.9	2288	4.4	4160	8.8	4160	3.1	16	4342	3.0	166.310	-B13000	40-P112/M4	
8.7	4180	1.0	0.9	2608	3.6	4180	8.7	4180	1.0	15	4351	1.0	167.383	-B4300	50-P112/M4	
8.2	4464	4.4	0.8	2456	4.1	4464	8.2	4464	4.4	14	4660	4.2	178.490	-B20000	40-P112/M4	
8.2	4476	1.8	0.8	2462	4.1	4476	8.2	4476	1.8	14	4673	1.7	178.970	-B8000	40-P112/M4	
7.9	4633	2.8	0.8	2548	3.9	4633	7.9	4633	2.8	14	4836	2.7	185.230	-B13000	40-P112/M4	
7.8	4641	0.9	0.8	2895	3.2	4641	7.8	4641	0.9	14	4831	0.9	185.857	-B4300	50-P112/M4	
7.6	4775	1.7	0.8	2627	3.8	4775	7.6	4775	1.7	14	4985	1.6	190.920	-B8000	40-P112/M4	
7.3	4990	3.8	0.7	2745	3.7	4990	7.3	4990	3.8	13	5209	3.7	199.510	-B20000	40-P112/M4	
7.2	5074	1.6	0.7	2791	3.6	5074	7.2	5074	1.6	13	5296	1.5	202.860	-B8000	40-P112/M4	
7.2	5073	0.9	0.7	3165	3.0	5073	7.2	5073	0.9	13	5280	0.8	203.143	-B4300	50-P112/M4	
7.0	5211	2.5	0.7	2866	3.5	5211	7.0	5211	2.5	12	5440	2.4	208.350	-B13000	40-P112/M4	
6.5	5585	2.3	0.6	3072	3.3	5585	6.5	5585	2.3	12	5830	2.2	223.300	-B13000	40-P112/M4	
6.2	5928	1.4	0.6	3261	3.1	5928	6.2	5928	1.4	11	6189	1.3	237.030	-B8000	40-P112/M4	

Selection tables, 4-pole motors

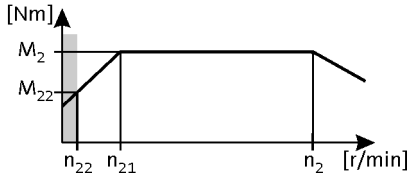

50 Hz: P_N = 5.5 kW
87 Hz: P_N = 9.6 kW

3-stage gearboxes

Mains operation 400 V, 50 Hz			Inverter operation 5 Hz -		- 20 ... 25 Hz		- 50 Hz (1:10)			- 87 Hz (1:17.4)			i	Product		
n_2 [r/min]	M_2 [Nm]	c	n_{22} [r/min]	M_{22} [Nm]	n_{21} [r/min]	M_2 [Nm]	n_2 [r/min]	M_2 [Nm]	c	n_2 [r/min]	M_2 [Nm]	c		g500	m5□□	
295	169	1.8	29	105	121	169	295	169	1.8				4.958	-B820	50-P132/M4	
292	171	1.6	29	106	120	171	292	171	1.6				5.002	-B450	50-P132/M4	
288	173	2.2	29	107	118	173	288	173	2.2				5.067	-B600	50-P132/M4	
215	232	1.7	21	144	88	232	215	232	1.7				6.800	-B820	50-P132/M4	
213	234	1.3	21	145	88	234	213	234	1.3				6.860	-B450	50-P132/M4	
213	235	3.6	21	146	87	235	213	235	3.6				6.866	-B1500	50-P132/M4	
210	237	1.7	21	147	86	237	210	237	1.7				6.949	-B600	50-P132/M4	
192	260	1.8	19	161	79	260	192	260	1.8				7.617	-B600	50-P132/M4	
192	260	1.6	19	161	79	260	192	260	1.6				7.618	-B820	50-P132/M4	
171	291	1.6	17	181	71	291	171	291	1.6				8.517	-B820	50-P132/M4	
166	300	5.1	17	186	68	300	166	300	5.1				8.793	-B2700	50-P132/M4	
157	318	1.2	16	197	64	318	157	318	1.2				9.315	-B450	50-P132/M4	
153	325	3.1	15	202	63	325	153	325	3.1				9.516	-B1500	50-P132/M4	
153	325	1.5	15	202	63	325	153	325	1.5				9.520	-B820	50-P132/M4	
141	353	1.1	14	219	58	353	141	353	1.1				10.328	-B450	50-P132/M4	
140	357	1.5	14	221	57	357	140	357	1.5				10.447	-B820	50-P132/M4	
136	367	1.5	14	228	56	367	136	367	1.5				10.741	-B600	50-P132/M4	
134	373	3.6	13	231	55	373	134	373	3.6				10.902	-B1500	50-P132/M4	
125	399	1.4	12	248	51	399	125	399	1.4				11.680	-B820	50-P132/M4	
125	400	5.5	12	248	51	400	125	400	5.5				11.713	-B2700	50-P132/M4	
122	410	3.6	12	254	50	410	122	410	3.6				11.985	-B1500	50-P132/M4	
120	415	1.3	12	257	49	415	120	415	1.3				12.143	-B820	50-P132/M4	
114	437	0.9	11	271	47	437	114	437	0.9				12.775	-B450	50-P132/M4	
114	440	5.2	11	273	47	440	114	440	5.2				12.863	-B2700	50-P132/M4	
111	448	2.5	11	278	46	448	111	448	2.5				13.118	-B1500	50-P132/M4	
109	457	1.2	11	283	45	457	109	457	1.2				13.369	-B600	50-P132/M4	
109	457	1.4	11	283	45	457	109	457	1.4				13.370	-B820	50-P132/M4	
103	484	0.9	10	300	42	484	103	484	0.9				14.165	-B450	50-P132/M4	
100	500	1.3	9.9	310	41	500	100	500	1.3				14.626	-B820	50-P132/M4	
99	503	1.2	9.8	312	41	503	99	503	1.2				14.730	-B600	50-P132/M4	
98	509	4.7	9.7	316	40	509	98	509	4.7				14.888	-B2700	50-P132/M4	
97	516	2.9	9.6	320	40	516	97	516	2.9				15.111	-B1500	50-P132/M4	
89	559	4.4	8.9	347	37	559	89	559	4.4				16.351	-B2700	50-P132/M4	
89	559	1.3	8.9	347	37	559	89	559	1.3				16.352	-B820	50-P132/M4	
88	568	2.6	8.7	352	36	568	88	568	2.6				16.611	-B1500	50-P132/M4	

Selection tables, 4-pole motors

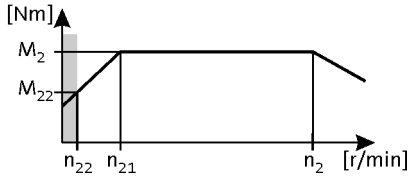

50 Hz: P_N = 5.5 kW
87 Hz: P_N = 9.6 kW

3-stage gearboxes

Mains operation 400 V, 50 Hz			Inverter operation 5 Hz -		- 20 ... 25 Hz		- 50 Hz (1:10)			- 87 Hz (1:17.4)			i	Product		
n_2 [r/min]	M_2 [Nm]	c	n_{22} [r/min]	M_{22} [Nm]	n_{21} [r/min]	M_2 [Nm]	n_2 [r/min]	M_2 [Nm]	c	n_2 [r/min]	M_2 [Nm]	c		g500	m5□□	
79	635	2.4	7.8	394	32	635	79	635	2.4				18.598	-B1500	50-P132/M4	
78	637	1.2	7.8	395	32	637	78	637	1.2				18.655	-B820	50-P132/M4	
77	644	0.9	7.7	400	32	644	77	644	0.9				18.851	-B600	50-P132/M4	
75	668	3.9	7.4	414	31	668	75	668	3.9				19.542	-B2700	50-P132/M4	
71	699	2.2	7.1	433	29	699	71	699	2.2				20.444	-B1500	50-P132/M4	
71	705	0.9	7.0	437	29	705	71	705	0.9				20.622	-B600	50-P132/M4	
70	713	1.2	7.0	442	29	713	70	713	1.2				20.857	-B820	50-P132/M4	
69	720	6.0	6.9	447	29	720	69	720	6.0				21.065	-B4300	50-P132/M4	
66	761	3.5	6.5	472	27	761	66	761	3.5				22.269	-B2700	50-P132/M4	
64	781	1.1	6.3	484	26	781	64	781	1.1				22.853	-B820	50-P132/M4	
64	782	1.9	6.3	485	26	782	64	782	1.9				22.898	-B1500	50-P132/M4	
63	793	5.4	6.2	492	26	793	63	793	5.4				23.206	-B4300	50-P132/M4	
61	819	1.8	6.0	508	25	819	61	819	1.8				23.973	-B1500	50-P132/M4	
60	836	3.2	5.9	518	25	836	60	836	3.2				24.456	-B2700	50-P132/M4	
58	867	5.0	5.7	538	24	867	58	867	5.0				25.365	-B4300	50-P132/M4	
57	873	0.9	5.7	542	24	873	57	873	0.9				25.550	-B820	50-P132/M4	
55	900	1.7	5.5	559	23	900	55	900	1.7				26.353	-B1500	50-P132/M4	
54	916	3.0	5.4	568	22	916	54	916	3.0				26.814	-B2700	50-P132/M4	
52	957	4.5	5.2	594	21	957	52	957	4.5				28.013	-B4300	50-P132/M4	
50	998	1.5	5.0	619	21	998	50	998	1.5				29.206	-B1500	50-P132/M4	
50	1006	2.7	4.9	624	20	1006	50	1006	2.7				29.447	-B2700	50-P132/M4	
47	1063	4.1	4.7	659	19	1063	47	1063	4.1				31.097	-B4300	50-P132/M4	
45	1112	1.4	4.5	690	18	1112	45	1112	1.4				32.547	-B1500	50-P132/M4	
44	1123	2.4	4.4	697	18	1123	44	1123	2.4				32.873	-B2700	50-P132/M4	
41	1217	3.5	4.1	755	17	1217	41	1217	3.5				35.607	-B4300	50-P132/M4	
41	1223	1.2	4.1	758	17	1223	41	1223	1.2				35.778	-B1500	50-P132/M4	
40	1234	2.2	4.0	765	17	1234	40	1234	2.2				36.102	-B2700	50-P132/M4	
40	1248	1.2	4.0	774	16	1248	40	1248	1.2				36.526	-B1500	50-P132/M4	
38	1317	3.3	3.8	817	16	1317	38	1317	3.3				38.546	-B4300	50-P132/M4	
36	1397	1.1	3.5	867	15	1397	36	1397	1.1				40.895	-B1500	50-P132/M4	
34	1461	2.9	3.4	906	14	1461	34	1461	2.9				42.760	-B4300	50-P132/M4	
34	1462	1.9	3.4	907	14	1462	34	1462	1.9				42.772	-B2700	50-P132/M4	
34	1475	5.4	3.4	811	17	1467	34	1475	5.4	60	1467	5.2	43.180	-B8000	40-P132/M4	
33	1536	1.0	3.2	953	13	1536	33	1536	1.0				44.955	-B1500	50-P132/M4	
31	1591	0.9	3.1	987	13	1591	31	1591	0.9				46.568	-B1500	50-P132/M4	

Selection tables, 4-pole motors

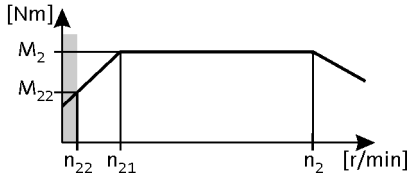

50 Hz: P_N = 5.5 kW
87 Hz: P_N = 9.6 kW

3-stage gearboxes

Mains operation 400 V, 50 Hz			Inverter operation 5 Hz -		- 20 ... 25 Hz		- 50 Hz (1:10)			- 87 Hz (1:17.4)			i	Product		
n_2 [r/min]	M_2 [Nm]	c	n_{22} [r/min]	M_{22} [Nm]	n_{21} [r/min]	M_2 [Nm]	n_2 [r/min]	M_2 [Nm]	c	n_2 [r/min]	M_2 [Nm]	c		g500	m5□□	
31	1597	2.7	3.1	991	13	1597	31	1597	2.7				46.737	-B4300	50-P132/M4	
31	1605	1.7	3.1	996	13	1605	31	1605	1.7				46.973	-B2700	50-P132/M4	
30	1671	1.6	3.0	1037	12	1671	30	1671	1.6				48.912	-B2700	50-P132/M4	
30	1694	4.7	2.9	932	15	1685	30	1694	4.7	52	1685	4.5	49.600	-B8000	40-P132/M4	
27	1820	2.4	2.7	1129	11	1820	27	1820	2.4				53.258	-B4300	50-P132/M4	
27	1848	1.5	2.7	1146	11	1848	27	1848	1.5				54.082	-B2700	50-P132/M4	
27	1870	4.3	2.6	1029	13	1860	27	1870	4.3	47	1860	4.1	54.760	-B8000	40-P132/M4	
25	2005	2.1	2.5	1244	10	2005	25	2005	2.1				58.671	-B4300	50-P132/M4	
25	2029	1.3	2.4	1259	10	2029	25	2029	1.3				59.393	-B2700	50-P132/M4	
24	2127	3.8	2.3	1170	12	2116	24	2127	3.8	41	2116	3.6	62.280	-B8000	40-P132/M4	
23	2191	2.0	2.3	1359	9.4	2191	23	2191	2.0				64.127	-B4300	50-P132/M4	
23	2202	1.2	2.2	1366	9.3	2202	23	2202	1.2				64.452	-B2700	50-P132/M4	
22	2309	5.6	2.1	1270	11	2297	22	2309	5.6	38	2297	5.4	67.610	-B13000	40-P132/M4	
21	2410	3.3	2.1	1326	10	2397	21	2410	3.3	37	2397	3.2	70.560	-B8000	40-P132/M4	
20	2458	1.8	2.0	1525	8.3	2458	20	2458	1.8				71.930	-B4300	50-P132/M4	
20	2459	1.1	2.0	1525	8.3	2459	20	2459	1.1				71.951	-B2700	50-P132/M4	
19	2604	5.0	1.9	1432	9.6	2589	19	2604	5.0	34	2589	4.8	76.230	-B13000	40-P132/M4	
19	2686	1.6	1.8	1666	7.6	2686	19	2686	1.6				78.619	-B4300	50-P132/M4	
19	2719	2.9	1.8	1495	9.2	2704	19	2719	2.9	32	2704	2.8	79.590	-B8000	40-P132/M4	
17	2921	4.5	1.7	1607	8.6	2905	17	2921	4.5	30	2905	4.2	85.510	-B13000	40-P132/M4	
17	3033	2.6	1.6	1669	8.3	3017	17	3033	2.6	29	3017	2.5	88.810	-B8000	40-P132/M4	
15	3273	4.0	1.5	1800	7.7	3255	15	3273	4.0	27	3255	3.8	95.830	-B13000	40-P132/M4	
15	3330	1.3	1.5	2065	6.2	3330	15	3330	1.3				97.453	-B4300	50-P132/M4	
15	3331	0.8	1.5	2066	6.2	3331	15	3331	0.8				97.481	-B2700	50-P132/M4	
15	3408	2.4	1.5	1875	7.4	3390	15	3408	2.4	26	3390	2.2	99.790	-B8000	40-P132/M4	
14	3571	5.5	1.4	1964	7.0	3552	14	3571	5.5	25	3552	5.2	104.560	-B20000	40-P132/M4	
14	3640	1.2	1.4	2258	5.6	3640	14	3640	1.2				106.517	-B4300	50-P132/M4	
14	3645	3.6	1.4	2005	6.9	3625	14	3645	3.6	24	3625	3.4	106.720	-B13000	40-P132/M4	
13	3849	2.1	1.3	2117	6.5	3828	13	3849	2.1	23	3828	2.1	112.680	-B8000	40-P132/M4	
13	3996	4.9	1.2	2198	6.3	3974	13	3996	4.9	22	3974	4.9	117.000	-B20000	40-P132/M4	
12	4044	1.1	1.2	2508	5.1	4044	12	4044	1.1				118.336	-B4300	50-P132/M4	
12	4093	3.2	1.2	2251	6.1	4070	12	4093	3.2	22	4070	3.2	119.830	-B13000	40-P132/M4	
12	4343	1.8	1.1	2389	5.8	4319	12	4343	1.8	20	4319	1.9	127.160	-B8000	40-P132/M4	
11	4420	1.0	1.1	2741	4.6	4420	11	4420	1.0				129.342	-B4300	50-P132/M4	
11	4442	4.4	1.1	2443	5.7	4418	11	4442	4.4	20	4418	4.4	130.050	-B20000	40-P132/M4	

Selection tables, 4-pole motors

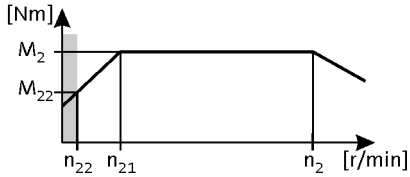

50 Hz: P_N = 5.5 kW
87 Hz: P_N = 9.6 kW

3-stage gearboxes

Mains operation 400 V, 50 Hz			Inverter operation 5 Hz -		- 20 ... 25 Hz		- 50 Hz (1:10)			- 87 Hz (1:17.4)			i	Product		
n_2 [r/min]	M_2 [Nm]	c	n_{22} [r/min]	M_{22} [Nm]	n_{21} [r/min]	M_2 [Nm]	n_2 [r/min]	M_2 [Nm]	c	n_2 [r/min]	M_2 [Nm]	c		g500	m5□□	
11	4517	2.9	1.1	2485	5.6	4492	11	4517	2.9	20	4492	2.9	132.240	-B13000	40-P132/M4	
10	4814	1.7	1.0	2648	5.2	4787	10	4814	1.7	18	4787	1.7	140.930	-B8000	40-P132/M4	
10	4860	4.0	1.0	2673	5.2	4833	10	4860	4.0	18	4833	4.0	142.280	-B20000	40-P132/M4	
9.8	5142	2.5	1.0	2829	4.9	5114	9.8	5142	2.5	17	5114	2.5	150.550	-B13000	40-P132/M4	
9.3	5419	1.5	0.9	2981	4.6	5389	9.3	5419	1.5	16	5389	1.5	158.650	-B8000	40-P132/M4	
9.1	5499	3.6	0.9	3024	4.6	5468	9.1	5499	3.6	16	5468	3.6	160.980	-B20000	40-P132/M4	
8.8	5681	2.3	0.9	3125	4.4	5649	8.8	5681	2.3	16	5649	2.3	166.310	-B13000	40-P132/M4	
8.2	6097	3.2	0.8	3353	4.1	6063	8.2	6097	3.2	15	6063	3.2	178.490	-B20000	40-P132/M4	
8.2	6113	1.3	0.8	3362	4.1	6079	8.2	6113	1.3	14	6079	1.3	178.970	-B8000	40-P132/M4	
7.9	6327	2.1	0.8	3480	4.0	6292	7.9	6327	2.1	14	6292	2.1	185.230	-B13000	40-P132/M4	
7.7	6521	1.2	0.8	3587	3.8	6485	7.7	6521	1.2	14	6485	1.2	190.920	-B8000	40-P132/M4	
7.4	6815	2.8	0.7	3748	3.7	6777	7.4	6815	2.8	13	6777	2.8	199.510	-B20000	40-P132/M4	
7.2	6929	1.2	0.7	3811	3.6	6891	7.2	6929	1.2	13	6891	1.2	202.860	-B8000	40-P132/M4	
7.1	7117	1.8	0.7	3914	3.5	7077	7.1	7117	1.8	12	7077	1.8	208.350	-B13000	40-P132/M4	
6.6	7627	1.7	0.6	4195	3.3	7585	6.6	7627	1.7	12	7585	1.7	223.300	-B13000	40-P132/M4	
6.2	8096	1.0	0.6	4453	3.1	8052	6.2	8096	1.0	11	8052	1.0	237.030	-B8000	40-P132/M4	

Selection tables, 4-pole motors

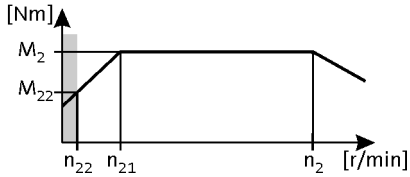

50 Hz: P_N = 7.5 kW
87 Hz: P_N = 13.1 kW

3-stage gearboxes

Mains operation 400 V, 50 Hz			Inverter operation 5 Hz -		- 20 ... 25 Hz		- 50 Hz (1:10)			- 87 Hz (1:17.4)			i	Product		
n_2 [r/min]	M_2 [Nm]	c	n_{22} [r/min]	M_{22} [Nm]	n_{21} [r/min]	M_2 [Nm]	n_2 [r/min]	M_2 [Nm]	c	n_2 [r/min]	M_2 [Nm]	c		g500	m5□□	
298	228	1.4	29	145	121	228	298	228	1.4				4.958	-B820	50-P132/L4	
295	230	1.2	29	146	120	230	295	230	1.2				5.002	-B450	50-P132/L4	
292	233	1.6	29	148	118	233	292	233	1.6				5.067	-B600	50-P132/L4	
269	253	5.6	26	160	109	253	269	253	5.6				5.488	-B4300	50-P132/L4	
217	313	1.3	21	198	88	313	217	313	1.3				6.800	-B820	50-P132/L4	
215	316	1.0	21	200	88	316	215	316	1.0				6.860	-B450	50-P132/L4	
215	316	2.7	21	200	87	316	215	316	2.7				6.866	-B1500	50-P132/L4	
214	319	4.5	21	202	87	319	214	319	4.5				6.918	-B2700	50-P132/L4	
213	320	1.2	21	203	86	320	213	320	1.2				6.949	-B600	50-P132/L4	
212	321	5.2	21	203	86	321	212	321	5.2				6.976	-B4300	50-P132/L4	
194	351	1.3	19	222	79	351	194	351	1.3				7.617	-B600	50-P132/L4	
194	351	1.2	19	222	79	351	194	351	1.2				7.618	-B820	50-P132/L4	
173	392	1.2	17	248	71	392	173	392	1.2				8.517	-B820	50-P132/L4	
168	405	3.8	17	256	68	405	168	405	3.8				8.793	-B2700	50-P132/L4	
161	422	4.8	16	267	66	422	161	422	4.8				9.156	-B4300	50-P132/L4	
159	429	0.9	16	272	64	429	159	429	0.9				9.315	-B450	50-P132/L4	
155	438	2.3	15	277	63	438	155	438	2.3				9.516	-B1500	50-P132/L4	
155	438	1.1	15	278	63	438	155	438	1.1				9.520	-B820	50-P132/L4	
146	467	5.6	14	296	59	467	146	467	5.6				10.137	-B4300	50-P132/L4	
141	481	1.1	14	305	57	481	141	481	1.1				10.447	-B820	50-P132/L4	
138	495	1.1	14	313	56	495	138	495	1.1				10.741	-B600	50-P132/L4	
136	502	2.7	13	318	55	502	136	502	2.7				10.902	-B1500	50-P132/L4	
133	510	5.6	13	323	54	510	133	510	5.6				11.080	-B4300	50-P132/L4	
127	538	1.1	12	341	51	538	127	538	1.1				11.680	-B820	50-P132/L4	
126	539	4.1	12	341	51	539	126	539	4.1				11.713	-B2700	50-P132/L4	
123	552	2.7	12	349	50	552	123	552	2.7				11.985	-B1500	50-P132/L4	
122	559	1.0	12	354	49	559	122	559	1.0				12.143	-B820	50-P132/L4	
115	592	3.8	11	375	47	592	115	592	3.8				12.863	-B2700	50-P132/L4	
115	593	5.2	11	376	47	593	115	593	5.2				12.885	-B4300	50-P132/L4	
113	604	1.9	11	382	46	604	113	604	1.9				13.118	-B1500	50-P132/L4	
111	616	0.9	11	390	45	616	111	616	0.9				13.369	-B600	50-P132/L4	
111	616	1.0	11	390	45	616	111	616	1.0				13.370	-B820	50-P132/L4	
105	649	5.2	10	411	43	649	105	649	5.2				14.084	-B4300	50-P132/L4	
101	674	1.0	9.9	426	41	674	101	674	1.0				14.626	-B820	50-P132/L4	
100	678	0.9	9.8	429	41	678	100	678	0.9				14.730	-B600	50-P132/L4	

Selection tables, 4-pole motors

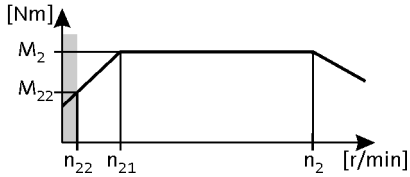

50 Hz: P_N = 7.5 kW
87 Hz: P_N = 13.1 kW

3-stage gearboxes

Mains operation 400 V, 50 Hz			Inverter operation 5 Hz -		- 20 ... 25 Hz		- 50 Hz (1:10)			- 87 Hz (1:17.4)			i	Product		
n_2 [r/min]	M_2 [Nm]	c	n_{22} [r/min]	M_{22} [Nm]	n_{21} [r/min]	M_2 [Nm]	n_2 [r/min]	M_2 [Nm]	c	n_2 [r/min]	M_2 [Nm]	c		g500	m5□□	
99	686	3.5	9.7	434	40	686	99	686	3.5				14.888	-B2700	50-P132/L4	
98	696	2.2	9.6	441	40	696	98	696	2.2				15.111	-B1500	50-P132/L4	
90	753	3.2	8.9	477	37	753	90	753	3.2				16.351	-B2700	50-P132/L4	
90	753	0.9	8.9	477	37	753	90	753	0.9				16.352	-B820	50-P132/L4	
89	765	2.0	8.7	484	36	765	89	765	2.0				16.611	-B1500	50-P132/L4	
87	779	4.8	8.6	493	36	779	87	779	4.8				16.913	-B4300	50-P132/L4	
80	851	4.8	7.8	539	33	851	80	851	4.8				18.486	-B4300	50-P132/L4	
79	857	1.8	7.8	542	32	857	79	857	1.8				18.598	-B1500	50-P132/L4	
79	859	0.9	7.8	544	32	859	79	859	0.9				18.655	-B820	50-P132/L4	
76	900	2.9	7.4	570	31	900	76	900	2.9				19.542	-B2700	50-P132/L4	
72	942	1.6	7.1	596	29	942	72	942	1.6				20.444	-B1500	50-P132/L4	
71	961	0.9	7.0	608	29	961	71	961	0.9				20.857	-B820	50-P132/L4	
70	970	4.4	6.9	614	29	970	70	970	4.4				21.065	-B4300	50-P132/L4	
66	1026	2.6	6.5	649	27	1026	66	1026	2.6				22.269	-B2700	50-P132/L4	
65	1055	1.4	6.3	667	26	1055	65	1055	1.4				22.898	-B1500	50-P132/L4	
64	1069	4.0	6.2	676	26	1069	64	1069	4.0				23.206	-B4300	50-P132/L4	
60	1126	2.4	5.9	713	25	1126	60	1126	2.4				24.456	-B2700	50-P132/L4	
58	1168	3.7	5.7	739	24	1168	58	1168	3.7				25.365	-B4300	50-P132/L4	
55	1235	2.2	5.4	782	22	1235	55	1235	2.2				26.814	-B2700	50-P132/L4	
53	1290	3.3	5.2	817	21	1290	53	1290	3.3				28.013	-B4300	50-P132/L4	
51	1339	5.7	5.1	737	26	1331	51	1339	5.7	90	1331	4.8	28.660	-B8000	40-P132/L4	
51	1345	1.1	5.0	851	21	1345	51	1345	1.1				29.206	-B1500	50-P132/L4	
50	1356	2.0	4.9	858	20	1356	50	1356	2.0				29.447	-B2700	50-P132/L4	
48	1432	3.0	4.7	906	19	1432	48	1432	3.0				31.097	-B4300	50-P132/L4	
45	1511	5.1	4.5	831	23	1502	45	1511	5.1	80	1502	4.3	32.330	-B8000	40-P132/L4	
45	1499	1.0	4.5	949	18	1499	45	1499	1.0				32.547	-B1500	50-P132/L4	
45	1514	1.8	4.4	958	18	1514	45	1514	1.8				32.873	-B2700	50-P132/L4	
41	1654	4.7	4.1	910	21	1654	41	1654	4.7				35.400	-B8000	40-P132/L4	
42	1640	2.6	4.1	1038	17	1640	42	1640	2.6				35.607	-B4300	50-P132/L4	
41	1648	0.9	4.1	1043	17	1648	41	1648	0.9				35.778	-B1500	50-P132/L4	
41	1663	1.6	4.0	1052	17	1663	41	1663	1.6				36.102	-B2700	50-P132/L4	
38	1775	2.4	3.8	1124	16	1775	38	1775	2.4				38.546	-B4300	50-P132/L4	
35	1969	2.2	3.4	1246	14	1969	35	1969	2.2				42.760	-B4300	50-P132/L4	
35	1970	1.4	3.4	1247	14	1970	35	1970	1.4				42.772	-B2700	50-P132/L4	
34	2018	4.0	3.4	1110	17	2005	34	2018	4.0	60	2005	3.8	43.180	-B8000	40-P132/L4	

Selection tables, 4-pole motors

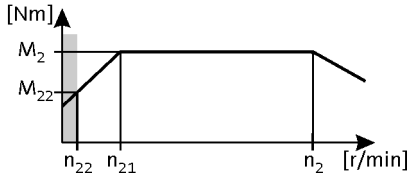

50 Hz: P_N = 7.5 kW
87 Hz: P_N = 13.1 kW

3-stage gearboxes

Mains operation 400 V, 50 Hz			Inverter operation 5 Hz -		- 20 ... 25 Hz		- 50 Hz (1:10)			- 87 Hz (1:17.4)			i	Product		
n_2 [r/min]	M_2 [Nm]	c	n_{22} [r/min]	M_{22} [Nm]	n_{21} [r/min]	M_2 [Nm]	n_2 [r/min]	M_2 [Nm]	c	n_2 [r/min]	M_2 [Nm]	c		g500	m5□□	
32	2153	2.0	3.1	1362	13	2153	32	2153	2.0				46.737	-B4300	50-P132/L4	
30	2253	1.2	3.0	1426	12	2253	30	2253	1.2				48.912	-B2700	50-P132/L4	
30	2318	3.5	2.9	1275	15	2304	30	2318	3.5	52	2304	3.3	49.600	-B8000	40-P132/L4	
28	2453	1.8	2.7	1552	11	2453	28	2453	1.8				53.258	-B4300	50-P132/L4	
27	2491	1.1	2.7	1576	11	2491	27	2491	1.1				54.082	-B2700	50-P132/L4	
27	2556	5.1	2.7	1406	13	2540	27	2556	5.1	47	2540	4.9	54.680	-B13000	40-P132/L4	
27	2559	3.1	2.6	1408	13	2543	27	2559	3.1	47	2543	3.0	54.760	-B8000	40-P132/L4	
25	2702	1.6	2.5	1710	10	2702	25	2702	1.6				58.671	-B4300	50-P132/L4	
25	2736	1.0	2.4	1731	10	2736	25	2736	1.0				59.393	-B2700	50-P132/L4	
24	2901	4.5	2.3	1596	12	2883	24	2901	4.5	42	2883	4.3	62.070	-B13000	40-P132/L4	
24	2911	2.8	2.3	1601	12	2892	24	2911	2.8	41	2892	2.6	62.280	-B8000	40-P132/L4	
23	2954	1.5	2.3	1869	9.4	2954	23	2954	1.5				64.127	-B4300	50-P132/L4	
22	3160	4.1	2.1	1738	11	3140	22	3160	4.1	38	3140	3.9	67.610	-B13000	40-P132/L4	
21	3298	2.4	2.1	1814	10	3277	21	3298	2.4	37	3277	2.3	70.560	-B8000	40-P132/L4	
21	3313	1.3	2.0	2097	8.3	3313	21	3313	1.3				71.930	-B4300	50-P132/L4	
21	3314	0.8	2.0	2097	8.3	3314	21	3314	0.8				71.951	-B2700	50-P132/L4	
20	3475	5.6	2.0	1911	9.9	3453	20	3475	5.6	35	3453	5.4	74.350	-B20000	40-P132/L4	
19	3563	3.7	1.9	1960	9.6	3540	19	3563	3.7	34	3540	3.5	76.230	-B13000	40-P132/L4	
19	3621	1.2	1.8	2292	7.6	3621	19	3621	1.2				78.619	-B4300	50-P132/L4	
18	3720	2.2	1.8	2046	9.2	3696	18	3720	2.2	32	3696	2.1	79.590	-B8000	40-P132/L4	
18	3900	5.0	1.7	2145	8.8	3875	18	3900	5.0	31	3875	4.8	83.440	-B20000	40-P132/L4	
17	3996	3.3	1.7	2198	8.6	3971	17	3996	3.3	30	3971	3.1	85.510	-B13000	40-P132/L4	
17	4151	1.9	1.6	2283	8.3	4125	17	4151	1.9	29	4125	1.8	88.810	-B8000	40-P132/L4	
16	4419	4.4	1.5	2431	7.8	4391	16	4419	4.4	27	4391	4.2	94.550	-B20000	40-P132/L4	
15	4479	2.9	1.5	2464	7.7	4451	15	4479	2.9	27	4451	2.8	95.830	-B13000	40-P132/L4	
15	4489	1.0	1.5	2841	6.2	4489	15	4489	1.0				97.453	-B4300	50-P132/L4	
15	4664	1.7	1.5	2565	7.4	4635	15	4664	1.7	26	4635	1.6	99.790	-B8000	40-P132/L4	
14	4887	4.0	1.4	2688	7.0	4856	14	4887	4.0	25	4856	3.8	104.560	-B20000	40-P132/L4	
14	4906	0.9	1.4	3105	5.6	4906	14	4906	0.9				106.517	-B4300	50-P132/L4	
14	4988	2.6	1.4	2743	6.9	4956	14	4988	2.6	24	4956	2.5	106.720	-B13000	40-P132/L4	
13	5266	1.5	1.3	2897	6.5	5233	13	5266	1.5	23	5233	1.5	112.680	-B8000	40-P132/L4	
13	5468	3.6	1.2	3008	6.3	5434	13	5468	3.6	22	5434	3.6	117.000	-B20000	40-P132/L4	
12	5600	2.3	1.2	3080	6.1	5565	12	5600	2.3	22	5565	2.3	119.830	-B13000	40-P132/L4	
12	5943	1.4	1.1	3269	5.8	5906	12	5943	1.4	20	5906	1.4	127.160	-B8000	40-P132/L4	
11	6078	3.2	1.1	3343	5.7	6040	11	6078	3.2	20	6040	3.2	130.050	-B20000	40-P132/L4	

Selection tables, 4-pole motors

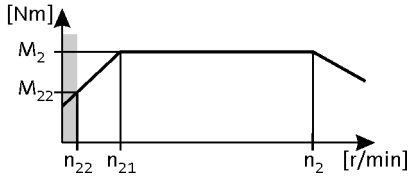

50 Hz: P_N = 7.5 kW
87 Hz: P_N = 13.1 kW

3-stage gearboxes

Mains operation 400 V, 50 Hz			Inverter operation 5 Hz -		- 20 ... 25 Hz		- 50 Hz (1:10)			- 87 Hz (1:17.4)			i	Product		
n_2 [r/min]	M_2 [Nm]	c	n_{22} [r/min]	M_{22} [Nm]	n_{21} [r/min]	M_2 [Nm]	n_2 [r/min]	M_2 [Nm]	c	n_2 [r/min]	M_2 [Nm]	c		g500	m5□□	
11	6180	2.1	1.1	3400	5.6	6142	11	6180	2.1	20	6142	2.1	132.240	-B13000	40-P132/L4	
10	6587	1.2	1.0	3623	5.2	6545	10	6587	1.2	18	6545	1.2	140.930	-B8000	40-P132/L4	
10	6650	2.9	1.0	3658	5.2	6608	10	6650	2.9	18	6608	3.0	142.280	-B20000	40-P132/L4	
9.7	7036	1.9	1.0	3870	4.9	6992	9.7	7036	1.9	17	6992	1.9	150.550	-B13000	40-P132/L4	
9.2	7415	1.1	0.9	4078	4.6	7368	9.2	7415	1.1	16	7368	1.1	158.650	-B8000	40-P132/L4	
9.1	7524	2.6	0.9	4138	4.6	7476	9.1	7524	2.6	16	7476	2.6	160.980	-B20000	40-P132/L4	
8.8	7773	1.7	0.9	4275	4.4	7724	8.8	7773	1.7	16	7724	1.7	166.310	-B13000	40-P132/L4	
8.2	8342	2.3	0.8	4588	4.1	8290	8.2	8342	2.3	14	8290	2.4	178.490	-B20000	40-P132/L4	
8.2	8364	1.0	0.8	4601	4.1	8312	8.2	8364	1.0	14	8312	1.0	178.970	-B8000	40-P132/L4	
7.9	8657	1.5	0.8	4762	4.0	8603	7.9	8657	1.5	14	8603	1.5	185.230	-B13000	40-P132/L4	
7.7	8923	0.9	0.8	4908	3.8	8867	7.7	8923	0.9	14	8867	0.9	190.920	-B8000	40-P132/L4	
7.3	9324	2.1	0.7	5129	3.7	9266	7.3	9324	2.1	13	9266	2.1	199.510	-B20000	40-P132/L4	
7.2	9481	0.8	0.7	5215	3.6	9421	7.2	9481	0.8	13	9421	0.9	202.860	-B8000	40-P132/L4	
7.0	9737	1.3	0.7	5356	3.5	9676	7.0	9737	1.3	12	9676	1.3	208.350	-B13000	40-P132/L4	
6.6	10436	1.3	0.6	5740	3.3	10371	6.6	10436	1.3	12	10371	1.3	223.300	-B13000	40-P132/L4	

Selection tables, 4-pole motors

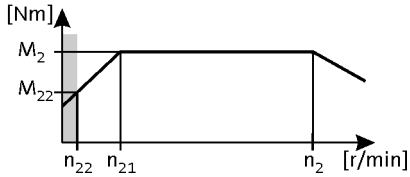

50 Hz: P_N = 11.0 kW
87 Hz: P_N = 19.2 kW

3-stage gearboxes

Mains operation 400 V, 50 Hz			Inverter operation 5 Hz -		- 20 ... 25 Hz		- 50 Hz (1:10)			- 87 Hz (1:17.4)			i	Product		
n_2 [r/min]	M_2 [Nm]	c	n_{22} [r/min]	M_{22} [Nm]	n_{21} [r/min]	M_2 [Nm]	n_2 [r/min]	M_2 [Nm]	c	n_2 [r/min]	M_2 [Nm]	c		g500	m5□□	
269	370	5.8	26	205	109	370	269	370	5.8				5.488	-B4300	50-P160/M4	
215	463	1.8	21	257	87	463	215	463	1.8				6.866	-B1500	50-P160/M4	
214	467	3.1	21	258	87	467	214	467	3.1				6.918	-B2700	50-P160/M4	
212	471	5.1	21	261	86	471	212	471	5.1				6.976	-B4300	50-P160/M4	
168	594	2.6	17	329	68	594	168	594	2.6				8.793	-B2700	50-P160/M4	
161	618	4.4	16	342	66	618	161	618	4.4				9.156	-B4300	50-P160/M4	
155	642	1.6	15	356	63	642	155	642	1.6				9.516	-B1500	50-P160/M4	
150	668	5.8	15	367	75	668	150	668	5.8				9.810	-B8000	40-P160/M4	
146	684	5.8	14	379	59	684	146	684	5.8				10.137	-B4300	50-P160/M4	
136	736	1.8	13	407	55	736	136	736	1.8				10.902	-B1500	50-P160/M4	
133	748	5.7	13	414	54	748	133	748	5.7				11.080	-B4300	50-P160/M4	
131	767	5.2	13	422	66	767	131	767	5.2				11.260	-B8000	40-P160/M4	
126	791	2.8	12	438	51	791	126	791	2.8				11.713	-B2700	50-P160/M4	
123	809	1.8	12	448	50	809	123	809	1.8				11.985	-B1500	50-P160/M4	
119	847	4.8	12	466	60	844	119	847	4.8	208	844	4.0	12.440	-B8000	40-P160/M4	
115	868	2.6	11	481	47	868	115	868	2.6				12.863	-B2700	50-P160/M4	
115	870	4.9	11	481	47	870	115	870	4.9				12.885	-B4300	50-P160/M4	
113	886	1.3	11	490	46	886	113	886	1.3				13.118	-B1500	50-P160/M4	
105	951	4.5	10	526	43	951	105	951	4.5				14.084	-B4300	50-P160/M4	
104	963	4.3	10	530	52	959	104	963	4.3	183	959	3.6	14.150	-B8000	40-P160/M4	
99	1005	2.4	9.7	556	40	1005	99	1005	2.4				14.888	-B2700	50-P160/M4	
98	1020	1.5	9.6	565	40	1020	98	1020	1.5				15.111	-B1500	50-P160/M4	
90	1104	2.2	8.9	611	37	1104	90	1104	2.2				16.351	-B2700	50-P160/M4	
89	1121	1.3	8.7	621	36	1121	89	1121	1.3				16.611	-B1500	50-P160/M4	
87	1142	3.8	8.6	632	36	1142	87	1142	3.8				16.913	-B4300	50-P160/M4	
84	1194	5.8	8.3	657	42	1194	84	1194	5.8				17.540	-B8000	40-P160/M4	
80	1248	3.5	7.8	691	33	1248	80	1248	3.5				18.486	-B4300	50-P160/M4	
80	1256	1.2	7.8	695	32	1256	80	1256	1.2				18.598	-B1500	50-P160/M4	
76	1319	2.0	7.4	730	31	1319	76	1319	2.0				19.542	-B2700	50-P160/M4	
73	1372	5.2	7.2	755	37	1372	73	1372	5.2				20.150	-B8000	40-P160/M4	
72	1380	1.1	7.1	764	29	1380	72	1380	1.1				20.444	-B1500	50-P160/M4	
70	1422	3.0	6.9	787	29	1422	70	1422	3.0				21.065	-B4300	50-P160/M4	
66	1515	4.8	6.5	833	33	1515	66	1515	4.8				22.250	-B8000	40-P160/M4	
66	1503	1.8	6.5	832	27	1503	66	1503	1.8				22.269	-B2700	50-P160/M4	
65	1546	1.0	6.3	855	26	1546	65	1546	1.0				22.898	-B1500	50-P160/M4	

Selection tables, 4-pole motors

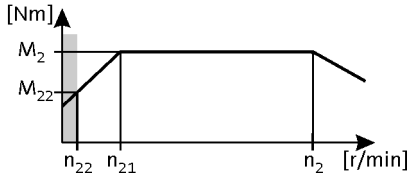

50 Hz: P_N = 11.0 kW
87 Hz: P_N = 19.2 kW

3-stage gearboxes

Mains operation 400 V, 50 Hz			Inverter operation 5 Hz -		- 20 ... 25 Hz		- 50 Hz (1:10)			- 87 Hz (1:17.4)			i	Product		
n_2 [r/min]	M_2 [Nm]	c	n_{22} [r/min]	M_{22} [Nm]	n_{21} [r/min]	M_2 [Nm]	n_2 [r/min]	M_2 [Nm]	c	n_2 [r/min]	M_2 [Nm]	c		g500	m5□□	
64	1567	2.7	6.2	867	26	1567	64	1567	2.7				23.206	-B4300	50-P160/M4	
60	1651	1.6	5.9	914	25	1651	60	1651	1.6				24.456	-B2700	50-P160/M4	
58	1722	4.3	5.7	947	29	1722	58	1722	4.3				25.300	-B8000	40-P160/M4	
58	1712	2.5	5.7	948	24	1712	58	1712	2.5				25.365	-B4300	50-P160/M4	
55	1810	1.5	5.4	1002	22	1810	55	1810	1.5				26.814	-B2700	50-P160/M4	
53	1891	2.3	5.2	1046	21	1891	53	1891	2.3				28.013	-B4300	50-P160/M4	
52	1951	3.9	5.1	1073	26	1951	52	1951	3.9				28.660	-B8000	40-P160/M4	
50	1988	1.4	4.9	1100	20	1988	50	1988	1.4				29.447	-B2700	50-P160/M4	
48	2099	2.1	4.7	1162	19	2099	48	2099	2.1				31.097	-B4300	50-P160/M4	
46	2201	3.5	4.5	1211	23	2201	46	2201	3.5				32.330	-B8000	40-P160/M4	
45	2219	1.2	4.4	1228	18	2219	45	2219	1.2				32.873	-B2700	50-P160/M4	
42	2410	3.3	4.1	1326	21	2410	42	2410	3.3				35.400	-B8000	40-P160/M4	
42	2404	1.8	4.1	1330	17	2404	42	2404	1.8				35.607	-B4300	50-P160/M4	
41	2437	1.1	4.0	1349	17	2437	41	2437	1.1				36.102	-B2700	50-P160/M4	
38	2678	4.9	3.7	1473	19	2678	38	2678	4.9				39.330	-B13000	40-P160/M4	
35	2887	1.5	3.4	1597	14	2887	35	2887	1.5				42.760	-B4300	50-P160/M4	
34	2940	2.7	3.4	1617	17	2940	34	2940	2.7				43.180	-B8000	40-P160/M4	
33	3054	4.3	3.2	1680	17	3042	33	3054	4.3	58	3042	4.1	44.860	-B13000	40-P160/M4	
32	3155	1.4	3.1	1746	13	3155	32	3155	1.4				46.737	-B4300	50-P160/M4	
30	3377	2.4	2.9	1857	15	3363	30	3377	2.4	52	3363	2.3	49.600	-B8000	40-P160/M4	
29	3427	5.7	2.9	1885	15	3427	29	3427	5.7				50.340	-B20000	40-P160/M4	
28	3595	1.2	2.7	1989	11	3595	28	3595	1.2				53.258	-B4300	50-P160/M4	
27	3723	3.5	2.7	2048	14	3708	27	3723	3.5	47	3708	3.3	54.680	-B13000	40-P160/M4	
27	3728	2.2	2.6	2051	14	3713	27	3728	2.2	47	3713	2.0	54.760	-B8000	40-P160/M4	
25	3961	1.1	2.5	2192	10	3961	25	3961	1.1				58.671	-B4300	50-P160/M4	
24	4124	4.7	2.4	2269	12	4124	24	4124	4.7				60.580	-B20000	40-P160/M4	
24	4226	3.1	2.3	2324	12	4209	24	4226	3.1	42	4209	2.9	62.070	-B13000	40-P160/M4	
24	4240	1.9	2.3	2332	12	4223	24	4240	1.9	42	4223	1.8	62.280	-B8000	40-P160/M4	
23	4329	1.0	2.3	2395	9.4	4329	23	4329	1.0				64.127	-B4300	50-P160/M4	
22	4586	4.3	2.2	2523	11	4586	22	4586	4.3				67.360	-B20000	40-P160/M4	
22	4603	2.8	2.1	2532	11	4584	22	4603	2.8	38	4584	2.7	67.610	-B13000	40-P160/M4	
21	4804	1.7	2.1	2642	11	4784	21	4804	1.7	37	4784	1.6	70.560	-B8000	40-P160/M4	
21	4856	0.9	2.0	2687	8.3	4856	21	4856	0.9				71.930	-B4300	50-P160/M4	
20	5062	3.9	2.0	2784	10	5062	20	5062	3.9				74.350	-B20000	40-P160/M4	
19	5190	2.5	1.9	2855	9.7	5169	19	5190	2.5	34	5169	2.4	76.230	-B13000	40-P160/M4	

Selection tables, 4-pole motors

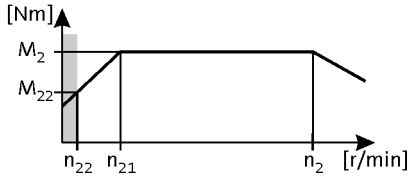

50 Hz: P_N = 11.0 kW
87 Hz: P_N = 19.2 kW

3-stage gearboxes

Mains operation 400 V, 50 Hz			Inverter operation 5 Hz -		- 20 ... 25 Hz		- 50 Hz (1:10)			- 87 Hz (1:17.4)			i	Product		
n_2 [r/min]	M_2 [Nm]	c	n_{22} [r/min]	M_{22} [Nm]	n_{21} [r/min]	M_2 [Nm]	n_2 [r/min]	M_2 [Nm]	c	n_2 [r/min]	M_2 [Nm]	c		g500	m5□□	
19	5307	0.8	1.8	2937	7.6	5307	19	5307	0.8				78.619	-B4300	50-P160/M4	
19	5419	1.5	1.8	2981	9.3	5397	19	5419	1.5	33	5397	1.4	79.590	-B8000	40-P160/M4	
18	5681	3.4	1.7	3125	8.9	5681	18	5681	3.4				83.440	-B20000	40-P160/M4	
17	5822	2.2	1.7	3202	8.7	5798	17	5822	2.2	30	5798	2.1	85.510	-B13000	40-P160/M4	
17	6046	1.3	1.6	3326	8.3	6022	17	6046	1.3	29	6022	1.3	88.810	-B8000	40-P160/M4	
16	6437	3.0	1.5	3541	7.8	6411	16	6437	3.0	27	6411	2.9	94.550	-B20000	40-P160/M4	
15	6524	2.0	1.5	3589	7.7	6498	15	6524	2.0	27	6498	1.9	95.830	-B13000	40-P160/M4	
15	6794	1.2	1.5	3737	7.4	6766	15	6794	1.2	26	6766	1.1	99.790	-B8000	40-P160/M4	
14	7119	2.7	1.4	3916	7.1	7090	14	7119	2.7	25	7090	2.6	104.560	-B20000	40-P160/M4	
14	7266	1.8	1.4	3996	6.9	7236	14	7266	1.8	24	7236	1.7	106.720	-B13000	40-P160/M4	
13	7671	1.0	1.3	4220	6.6	7640	13	7671	1.0	23	7640	1.1	112.680	-B8000	40-P160/M4	
13	7966	2.5	1.2	4381	6.3	7933	13	7966	2.5	22	7933	2.5	117.000	-B20000	40-P160/M4	
12	8158	1.6	1.2	4487	6.2	8125	12	8158	1.6	22	8125	1.6	119.830	-B13000	40-P160/M4	
12	8657	0.9	1.1	4762	5.8	8622	12	8657	0.9	20	8622	0.9	127.160	-B8000	40-P160/M4	
11	8854	2.2	1.1	4870	5.7	8818	11	8854	2.2	20	8818	2.2	130.050	-B20000	40-P160/M4	
11	9003	1.4	1.1	4952	5.6	8967	11	9003	1.4	20	8967	1.5	132.240	-B13000	40-P160/M4	
11	9595	0.8	1.0	5278	5.3	9556	11	9595	0.8	18	9556	0.8	140.930	-B8000	40-P160/M4	
10	9687	2.0	1.0	5328	5.2	9647	10	9687	2.0	18	9647	2.0	142.280	-B20000	40-P160/M4	
9.8	10250	1.3	1.0	5638	4.9	10208	9.8	10250	1.3	17	10208	1.3	150.550	-B13000	40-P160/M4	
9.2	10960	1.8	0.9	6028	4.6	10915	9.2	10960	1.8	16	10915	1.8	160.980	-B20000	40-P160/M4	
8.9	11323	1.2	0.9	6228	4.4	11277	8.9	11323	1.2	16	11277	1.2	166.310	-B13000	40-P160/M4	
8.3	12152	1.6	0.8	6684	4.1	12103	8.3	12152	1.6	15	12103	1.6	178.490	-B20000	40-P160/M4	
8.0	12611	1.0	0.8	6936	4.0	12560	8.0	12611	1.0	14	12560	1.0	185.230	-B13000	40-P160/M4	
7.4	13583	1.4	0.7	7471	3.7	13528	7.4	13583	1.4	13	13528	1.4	199.510	-B20000	40-P160/M4	
7.1	14185	0.9	0.7	7802	3.6	14127	7.1	14185	0.9	12	14127	0.9	208.350	-B13000	40-P160/M4	
6.6	15203	0.9	0.6	8362	3.3	15141	6.6	15203	0.9	12	15141	0.9	223.300	-B13000	40-P160/M4	

Selection tables, 4-pole motors

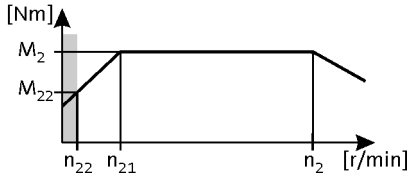

50 Hz: P_N = 15.0 kW
87 Hz: P_N = 26.3 kW

3-stage gearboxes

Mains operation 400 V, 50 Hz			Inverter operation 5 Hz -		- 20 ... 25 Hz		- 50 Hz (1:10)			- 87 Hz (1:17.4)			i	Product		
n_2 [r/min]	M_2 [Nm]	c	n_{22} [r/min]	M_{22} [Nm]	n_{21} [r/min]	M_2 [Nm]	n_2 [r/min]	M_2 [Nm]	c	n_2 [r/min]	M_2 [Nm]	c		g500	m5□□	
268	508	4.3	26	279	109	508	268	508	4.3				5.488	-B4300	50-P160/L4	
216	633	5.7	21	348	109	633	216	633	5.7				6.820	-B8000	40-P160/L4	
213	640	2.3	21	352	87	640	213	640	2.3				6.918	-B2700	50-P160/L4	
211	646	3.7	21	355	86	646	211	646	3.7				6.976	-B4300	50-P160/L4	
184	746	5.0	18	411	92	746	184	746	5.0				8.040	-B8000	40-P160/L4	
167	814	1.9	17	447	68	814	167	814	1.9				8.793	-B2700	50-P160/L4	
161	847	3.2	16	466	66	847	161	847	3.2				9.156	-B4300	50-P160/L4	
155	881	1.1	15	484	63	881	155	881	1.1				9.516	-B1500	50-P160/L4	
150	911	4.2	15	501	75	911	150	911	4.2				9.810	-B8000	40-P160/L4	
145	938	4.2	14	516	59	938	145	938	4.2				10.137	-B4300	50-P160/L4	
133	1026	4.1	13	564	54	1026	133	1026	4.1				11.080	-B4300	50-P160/L4	
131	1045	3.8	13	575	66	1045	131	1045	3.8				11.260	-B8000	40-P160/L4	
121	1133	6.0	12	623	61	1133	121	1133	6.0				12.200	-B13000	40-P160/L4	
119	1155	3.5	12	635	60	1155	119	1155	3.5				12.440	-B8000	40-P160/L4	
114	1193	3.6	11	656	47	1193	114	1193	3.6				12.885	-B4300	50-P160/L4	
112	1214	0.9	11	668	46	1214	112	1214	0.9				13.118	-B1500	50-P160/L4	
104	1304	3.3	10	717	43	1304	104	1304	3.3				14.084	-B4300	50-P160/L4	
104	1314	3.2	10	722	52	1314	104	1314	3.2				14.150	-B8000	40-P160/L4	
103	1335	5.0	10	734	52	1335	103	1335	5.0				14.380	-B8000	40-P160/L4	
99	1378	1.7	9.7	758	40	1378	99	1378	1.7				14.888	-B2700	50-P160/L4	
87	1565	2.8	8.6	861	36	1565	87	1565	2.8				16.913	-B4300	50-P160/L4	
84	1628	4.2	8.3	896	42	1628	84	1628	4.2				17.540	-B8000	40-P160/L4	
80	1711	2.5	7.8	941	33	1711	80	1711	2.5				18.486	-B4300	50-P160/L4	
75	1809	1.4	7.4	994	31	1809	75	1809	1.4				19.542	-B2700	50-P160/L4	
73	1871	3.8	7.2	1029	37	1871	73	1871	3.8				20.150	-B8000	40-P160/L4	
70	1950	2.2	6.9	1072	29	1950	70	1950	2.2				21.065	-B4300	50-P160/L4	
66	2066	3.5	6.5	1136	33	2066	66	2066	3.5				22.250	-B8000	40-P160/L4	
66	2061	1.3	6.5	1133	27	2061	66	2061	1.3				22.269	-B2700	50-P160/L4	
63	2148	2.0	6.2	1181	26	2148	63	2148	2.0				23.206	-B4300	50-P160/L4	
62	2210	5.9	6.1	1215	31	2210	62	2210	5.9				23.800	-B13000	40-P160/L4	
60	2264	1.2	5.9	1244	25	2264	60	2264	1.2				24.456	-B2700	50-P160/L4	
58	2349	3.2	5.7	1292	29	2349	58	2349	3.2				25.300	-B8000	40-P160/L4	
58	2348	1.8	5.7	1291	24	2348	58	2348	1.8				25.365	-B4300	50-P160/L4	
55	2482	1.1	5.4	1364	22	2482	55	2482	1.1				26.814	-B2700	50-P160/L4	
55	2508	5.2	5.4	1380	27	2508	55	2508	5.2				27.020	-B13000	40-P160/L4	

Selection tables, 4-pole motors

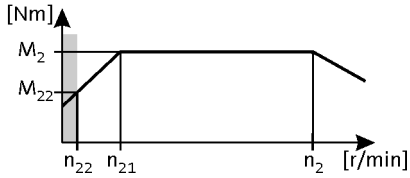

50 Hz: P_N = 15.0 kW
87 Hz: P_N = 26.3 kW

3-stage gearboxes

Mains operation 400 V, 50 Hz			Inverter operation 5 Hz -		- 20 ... 25 Hz		- 50 Hz (1:10)			- 87 Hz (1:17.4)			i	Product		
n_2 [r/min]	M_2 [Nm]	c	n_{22} [r/min]	M_{22} [Nm]	n_{21} [r/min]	M_2 [Nm]	n_2 [r/min]	M_2 [Nm]	c	n_2 [r/min]	M_2 [Nm]	c		g500	m5□□	
52	2661	2.9	5.1	1463	26	2661	52	2661	2.9				28.660	-B8000	40-P160/L4	
50	2732	4.8	4.9	1503	25	2732	50	2732	4.8				29.430	-B13000	40-P160/L4	
50	2726	1.0	4.9	1498	20	2726	50	2726	1.0				29.447	-B2700	50-P160/L4	
48	2855	4.6	4.7	1570	24	2855	48	2855	4.6				30.750	-B13000	40-P160/L4	
47	2878	1.5	4.7	1582	19	2878	47	2878	1.5				31.097	-B4300	50-P160/L4	
46	3001	2.6	4.5	1651	23	3001	46	3001	2.6				32.330	-B8000	40-P160/L4	
45	3043	0.9	4.4	1673	18	3043	45	3043	0.9				32.873	-B2700	50-P160/L4	
42	3286	2.4	4.1	1807	21	3286	42	3286	2.4				35.400	-B8000	40-P160/L4	
41	3341	0.8	4.0	1837	17	3341	41	3341	0.8				36.102	-B2700	50-P160/L4	
38	3651	3.6	3.7	2008	19	3651	38	3651	3.6				39.330	-B13000	40-P160/L4	
34	4009	2.0	3.4	2205	17	4009	34	4009	2.0				43.180	-B8000	40-P160/L4	
33	4155	4.7	3.2	2285	17	4155	33	4155	4.7				44.760	-B20000	40-P160/L4	
33	4165	3.1	3.2	2290	17	4165	33	4165	3.1				44.860	-B13000	40-P160/L4	
30	4605	1.7	2.9	2532	15	4605	30	4605	1.7				49.600	-B8000	40-P160/L4	
29	4673	4.2	2.9	2570	15	4673	29	4673	4.2				50.340	-B20000	40-P160/L4	
27	5076	2.6	2.7	2792	14	5076	27	5076	2.6	47	5079	2.4	54.680	-B13000	40-P160/L4	
27	5084	1.6	2.6	2796	14	5084	27	5084	1.6	47	5086	1.5	54.760	-B8000	40-P160/L4	
24	5624	3.5	2.4	3093	12	5624	24	5624	3.5				60.580	-B20000	40-P160/L4	
24	5762	2.3	2.3	3169	12	5762	24	5762	2.3	42	5765	2.1	62.070	-B13000	40-P160/L4	
24	5782	1.4	2.3	3180	12	5782	24	5782	1.4	42	5785	1.3	62.280	-B8000	40-P160/L4	
22	6254	3.1	2.2	3439	11	6254	22	6254	3.1				67.360	-B20000	40-P160/L4	
22	6277	2.1	2.1	3452	11	6277	22	6277	2.1	38	6280	2.0	67.610	-B13000	40-P160/L4	
21	6551	1.2	2.1	3603	11	6551	21	6551	1.2	37	6554	1.2	70.560	-B8000	40-P160/L4	
20	6903	2.8	2.0	3796	10	6903	20	6903	2.8				74.350	-B20000	40-P160/L4	
19	7077	1.8	1.9	3892	9.7	7077	19	7077	1.8	34	7080	1.7	76.230	-B13000	40-P160/L4	
19	7389	1.1	1.8	4064	9.3	7389	19	7389	1.1	33	7392	1.0	79.590	-B8000	40-P160/L4	
18	7746	2.5	1.7	4260	8.9	7746	18	7746	2.5				83.440	-B20000	40-P160/L4	
17	7939	1.6	1.7	4366	8.7	7939	17	7939	1.6	30	7942	1.6	85.510	-B13000	40-P160/L4	
17	8245	1.0	1.6	4534	8.3	8245	17	8245	1.0	29	8249	0.9	88.810	-B8000	40-P160/L4	
16	8778	2.2	1.5	4827	7.8	8778	16	8778	2.2	27	8782	2.1	94.550	-B20000	40-P160/L4	
15	8897	1.5	1.5	4893	7.7	8897	15	8897	1.5	27	8901	1.4	95.830	-B13000	40-P160/L4	
15	9264	0.9	1.5	5095	7.4	9264	15	9264	0.9	26	9269	0.8	99.790	-B8000	40-P160/L4	
14	9707	2.0	1.4	5338	7.1	9707	14	9707	2.0	25	9712	1.9	104.560	-B20000	40-P160/L4	
14	9908	1.3	1.4	5449	6.9	9908	14	9908	1.3	24	9912	1.2	106.720	-B13000	40-P160/L4	
13	10862	1.8	1.2	5974	6.3	10862	13	10862	1.8	22	10867	1.8	117.000	-B20000	40-P160/L4	

Selection tables, 4-pole motors

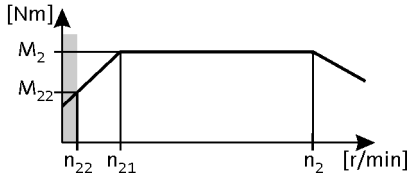

50 Hz: P_N = 15.0 kW
87 Hz: P_N = 26.3 kW

3-stage gearboxes

Mains operation 400 V, 50 Hz			Inverter operation 5 Hz -		- 20 ... 25 Hz		- 50 Hz (1:10)			- 87 Hz (1:17.4)			i	Product		
n_2 [r/min]	M_2 [Nm]	c	n_{22} [r/min]	M_{22} [Nm]	n_{21} [r/min]	M_2 [Nm]	n_2 [r/min]	M_2 [Nm]	c	n_2 [r/min]	M_2 [Nm]	c		g500	m5□□	
12	11125	1.2	1.2	6118	6.2	11125	12	11125	1.2	22	11130	1.2	119.830	-B13000	40-P160/L4	
11	12074	1.6	1.1	6640	5.7	12074	11	12074	1.6	20	12079	1.6	130.050	-B20000	40-P160/L4	
11	12277	1.1	1.1	6752	5.6	12277	11	12277	1.1	20	12283	1.1	132.240	-B13000	40-P160/L4	
10	13209	1.5	1.0	7264	5.2	13209	10	13209	1.5	18	13215	1.5	142.280	-B20000	40-P160/L4	
9.8	13977	0.9	1.0	7686	4.9	13977	9.8	13977	0.9	17	13983	0.9	150.550	-B13000	40-P160/L4	
9.2	14945	1.3	0.9	8219	4.6	14945	9.2	14945	1.3	16	14952	1.3	160.980	-B20000	40-P160/L4	
8.9	15440	0.8	0.9	8491	4.4	15440	8.9	15440	0.8	16	15447	0.8	166.310	-B13000	40-P160/L4	
8.3	16571	1.2	0.8	9113	4.1	16571	8.3	16571	1.2	15	16578	1.2	178.490	-B20000	40-P160/L4	
7.4	18522	1.0	0.7	10186	3.7	18522	7.4	18522	1.0	13	18531	1.0	199.510	-B20000	40-P160/L4	

Selection tables, 4-pole motors

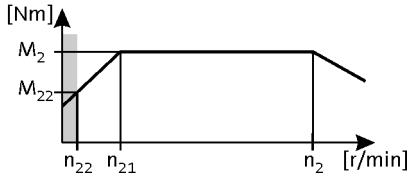

50 Hz: P_N = 18.5 kW
87 Hz: P_N = 32.2 kW

3-stage gearboxes

Mains operation 400 V, 50 Hz			Inverter operation 5 Hz -		- 20 ... 25 Hz		- 50 Hz (1:10)			- 87 Hz (1:17.4)			i	Product		
n_2 [r/min]	M_2 [Nm]	c	n_{22} [r/min]	M_{22} [Nm]	n_{21} [r/min]	M_2 [Nm]	n_2 [r/min]	M_2 [Nm]	c	n_2 [r/min]	M_2 [Nm]	c		g500	m5□□	
270	621	3.5	26	344	109	621	270	621	3.5				5.488	-B4300	50-P180/M4	
216	784	4.6	21	431	108	784	216	784	4.6				6.820	-B8000	40-P180/M4	
213	789	3.0	21	437	86	789	213	789	3.0				6.976	-B4300	50-P180/M4	
183	924	4.0	18	508	91	924	183	924	4.0				8.040	-B8000	40-P180/M4	
162	1036	2.6	16	573	66	1036	162	1036	2.6				9.156	-B4300	50-P180/M4	
150	1127	3.4	15	620	75	1127	150	1127	3.4				9.810	-B8000	40-P180/M4	
147	1150	5.7	15	633	73	1150	147	1150	5.7				10.010	-B13000	40-P180/M4	
146	1147	3.4	14	634	59	1147	146	1147	3.4				10.137	-B4300	50-P180/M4	
134	1254	3.4	13	694	54	1254	134	1254	3.4				11.080	-B4300	50-P180/M4	
131	1294	3.1	13	712	65	1294	131	1294	3.1				11.260	-B8000	40-P180/M4	
121	1402	4.8	12	771	60	1402	121	1402	4.8				12.200	-B13000	40-P180/M4	
118	1429	2.8	12	786	59	1429	118	1429	2.8				12.440	-B8000	40-P180/M4	
115	1458	3.0	11	807	47	1458	115	1458	3.0				12.885	-B4300	50-P180/M4	
105	1594	2.7	10	882	43	1594	105	1594	2.7				14.084	-B4300	50-P180/M4	
104	1626	2.6	10	894	52	1626	104	1626	2.6				14.150	-B8000	40-P180/M4	
88	1914	2.3	8.6	1059	36	1914	88	1914	2.3				16.913	-B4300	50-P180/M4	
84	2015	3.4	8.3	1109	42	2015	84	2015	3.4				17.540	-B8000	40-P180/M4	
80	2092	2.1	7.8	1157	33	2092	80	2092	2.1				18.486	-B4300	50-P180/M4	
75	2244	5.7	7.4	1234	38	2244	75	2244	5.7				19.530	-B13000	40-P180/M4	
73	2315	3.1	7.2	1274	37	2315	73	2315	3.1				20.150	-B8000	40-P180/M4	
70	2384	1.8	6.9	1318	29	2384	70	2384	1.8				21.065	-B4300	50-P180/M4	
66	2556	2.8	6.5	1406	33	2556	66	2556	2.8				22.250	-B8000	40-P180/M4	
64	2626	1.6	6.2	1452	26	2626	64	2626	1.6				23.206	-B4300	50-P180/M4	
62	2734	4.8	6.1	1504	31	2734	62	2734	4.8				23.800	-B13000	40-P180/M4	
58	2907	2.6	5.7	1599	29	2907	58	2907	2.6				25.300	-B8000	40-P180/M4	
59	2870	1.5	5.7	1588	24	2870	59	2870	1.5				25.365	-B4300	50-P180/M4	
54	3104	4.2	5.4	1708	27	3104	54	3104	4.2				27.020	-B13000	40-P180/M4	
51	3293	2.3	5.1	1811	26	3293	51	3293	2.3				28.660	-B8000	40-P180/M4	
50	3381	3.8	4.9	1860	25	3381	50	3381	3.8				29.430	-B13000	40-P180/M4	
48	3533	3.7	4.7	1943	24	3533	48	3533	3.7				30.750	-B13000	40-P180/M4	
48	3519	1.2	4.7	1946	19	3519	48	3519	1.2				31.097	-B4300	50-P180/M4	
46	3714	2.1	4.5	2043	23	3714	46	3714	2.1				32.330	-B8000	40-P180/M4	
42	4067	1.9	4.1	2237	21	4067	42	4067	1.9				35.400	-B8000	40-P180/M4	
37	4519	2.9	3.7	2486	19	4519	37	4519	2.9				39.330	-B13000	40-P180/M4	
34	4961	1.6	3.4	2729	17	4961	34	4961	1.6				43.180	-B8000	40-P180/M4	

Selection tables, 4-pole motors

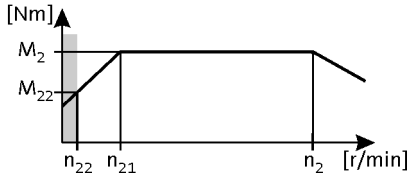

50 Hz: P_N = 18.5 kW
87 Hz: P_N = 32.2 kW

3-stage gearboxes

Mains operation 400 V, 50 Hz			Inverter operation 5 Hz -		- 20 ... 25 Hz		- 50 Hz (1:10)			- 87 Hz (1:17.4)			i	Product		
n_2 [r/min]	M_2 [Nm]	c	n_{22} [r/min]	M_{22} [Nm]	n_{21} [r/min]	M_2 [Nm]	n_2 [r/min]	M_2 [Nm]	c	n_2 [r/min]	M_2 [Nm]	c		g500	m5□□	
33	5154	2.5	3.2	2835	16	5154	33	5154	2.5				44.860	-B13000	40-P180/M4	
30	5699	1.4	2.9	3135	15	5699	30	5699	1.4				49.600	-B8000	40-P180/M4	
29	5784	3.4	2.9	3182	15	5784	29	5784	3.4				50.340	-B20000	40-P180/M4	
27	6282	2.1	2.7	3456	13	6282	27	6282	2.1				54.680	-B13000	40-P180/M4	
27	6291	1.3	2.6	3461	13	6291	27	6291	1.3				54.760	-B8000	40-P180/M4	
24	6960	2.8	2.4	3829	12	6960	24	6960	2.8				60.580	-B20000	40-P180/M4	
24	7131	1.8	2.3	3923	12	7072	24	7131	1.8	42	7072	1.7	62.070	-B13000	40-P180/M4	
24	7155	1.1	2.3	3936	12	7096	24	7155	1.1	41	7096	1.1	62.280	-B8000	40-P180/M4	
22	7739	2.5	2.2	4257	11	7739	22	7739	2.5				67.360	-B20000	40-P180/M4	
22	7768	1.7	2.1	4273	11	7703	22	7768	1.7	38	7703	1.6	67.610	-B13000	40-P180/M4	
21	8107	1.0	2.1	4460	10	8039	21	8107	1.0	37	8039	0.9	70.560	-B8000	40-P180/M4	
20	8542	2.3	2.0	4699	9.9	8542	20	8542	2.3				74.350	-B20000	40-P180/M4	
19	8758	1.5	1.9	4818	9.6	8685	19	8758	1.5	34	8685	1.4	76.230	-B13000	40-P180/M4	
19	9144	0.9	1.8	5030	9.2	9068	19	9144	0.9	32	9068	0.8	79.590	-B8000	40-P180/M4	
18	9586	2.0	1.7	5274	8.8	9586	18	9586	2.0				83.440	-B20000	40-P180/M4	
17	9824	1.3	1.7	5404	8.6	9743	17	9824	1.3	30	9743	1.3	85.510	-B13000	40-P180/M4	
16	10863	1.8	1.5	5976	7.8	10863	16	10863	1.8				94.550	-B20000	40-P180/M4	
15	11010	1.2	1.5	6057	7.7	10919	15	11010	1.2	27	10919	1.1	95.830	-B13000	40-P180/M4	
14	12013	1.6	1.4	6608	7.0	12013	14	12013	1.6				104.560	-B20000	40-P180/M4	
14	12261	1.1	1.4	6745	6.9	12159	14	12261	1.1	24	12159	1.0	106.720	-B13000	40-P180/M4	
13	13442	1.5	1.2	7395	6.3	13331	13	13442	1.5	22	13331	1.5	117.000	-B20000	40-P180/M4	
12	13767	0.9	1.2	7573	6.1	13653	12	13767	0.9	22	13653	1.0	119.830	-B13000	40-P180/M4	
11	14941	1.3	1.1	8219	5.7	14818	11	14941	1.3	20	14818	1.3	130.050	-B20000	40-P180/M4	

Selection tables, 4-pole motors

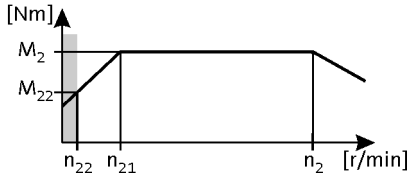

50 Hz: P_N = 22.0 kW
87 Hz: P_N = 38.5 kW

3-stage gearboxes

Mains operation 400 V, 50 Hz			Inverter operation 5 Hz -		- 20 ... 25 Hz		- 50 Hz (1:10)			- 87 Hz (1:17.4)			i	Product		
n_2 [r/min]	M_2 [Nm]	c	n_{22} [r/min]	M_{22} [Nm]	n_{21} [r/min]	M_2 [Nm]	n_2 [r/min]	M_2 [Nm]	c	n_2 [r/min]	M_2 [Nm]	c		g500	m5□□	
270	740	2.9	26	410	109	740	270	740	2.9				5.488	-B4300	50-P180/L4	
212	941	2.6	21	521	86	941	212	941	2.6				6.976	-B4300	50-P180/L4	
183	1098	3.4	18	604	91	1098	183	1098	3.4				8.040	-B8000	40-P180/L4	
167	1200	5.3	17	660	84	1200	167	1200	5.3				8.780	-B13000	40-P180/L4	
162	1235	2.2	16	684	66	1235	162	1235	2.2				9.156	-B4300	50-P180/L4	
150	1340	2.9	15	737	75	1340	150	1340	2.9				9.810	-B8000	40-P180/L4	
147	1368	4.8	15	752	73	1368	147	1368	4.8				10.010	-B13000	40-P180/L4	
146	1367	2.9	14	757	59	1367	146	1367	2.9				10.137	-B4300	50-P180/L4	
134	1494	2.8	13	827	54	1494	134	1494	2.8				11.080	-B4300	50-P180/L4	
131	1538	2.6	13	846	65	1538	131	1538	2.6				11.260	-B8000	40-P180/L4	
121	1667	4.1	12	917	60	1667	121	1667	4.1				12.200	-B13000	40-P180/L4	
118	1700	2.4	12	935	59	1700	118	1700	2.4				12.440	-B8000	40-P180/L4	
115	1737	2.5	11	962	47	1737	115	1737	2.5				12.885	-B4300	50-P180/L4	
105	1899	2.3	10	1051	43	1899	105	1899	2.3				14.084	-B4300	50-P180/L4	
104	1933	2.1	10	1063	52	1933	104	1933	2.1				14.150	-B8000	40-P180/L4	
88	2280	1.9	8.6	1263	36	2280	88	2280	1.9				16.913	-B4300	50-P180/L4	
80	2493	1.7	7.8	1380	33	2493	80	2493	1.7				18.486	-B4300	50-P180/L4	
75	2668	4.8	7.4	1467	38	2668	75	2668	4.8				19.530	-B13000	40-P180/L4	
73	2753	2.6	7.2	1514	37	2753	73	2753	2.6				20.150	-B8000	40-P180/L4	
70	2840	1.5	6.9	1573	29	2840	70	2840	1.5				21.065	-B4300	50-P180/L4	
66	3040	2.4	6.5	1672	33	3040	66	3040	2.4				22.250	-B8000	40-P180/L4	
64	3129	1.4	6.2	1733	26	3129	64	3129	1.4				23.206	-B4300	50-P180/L4	
62	3252	4.0	6.1	1788	31	3252	62	3252	4.0				23.800	-B13000	40-P180/L4	
58	3457	2.2	5.7	1901	29	3457	58	3457	2.2				25.300	-B8000	40-P180/L4	
58	3420	1.3	5.7	1894	24	3420	58	3420	1.3				25.365	-B4300	50-P180/L4	
54	3692	3.5	5.4	2030	27	3692	54	3692	3.5				27.020	-B13000	40-P180/L4	
51	3916	2.0	5.1	2153	26	3916	51	3916	2.0				28.660	-B8000	40-P180/L4	
50	4021	3.2	4.9	2211	25	4021	50	4021	3.2				29.430	-B13000	40-P180/L4	
48	4201	3.1	4.7	2311	24	4201	48	4201	3.1				30.750	-B13000	40-P180/L4	
48	4193	1.0	4.7	2322	19	4193	48	4193	1.0				31.097	-B4300	50-P180/L4	
46	4417	1.8	4.5	2429	23	4417	46	4417	1.8				32.330	-B8000	40-P180/L4	
42	4837	1.6	4.1	2660	21	4837	42	4837	1.6				35.400	-B8000	40-P180/L4	
37	5374	2.4	3.7	2955	19	5374	37	5374	2.4				39.330	-B13000	40-P180/L4	
34	5900	1.4	3.4	3244	17	5900	34	5900	1.4				43.180	-B8000	40-P180/L4	
33	6129	2.1	3.2	3371	16	6129	33	6129	2.1				44.860	-B13000	40-P180/L4	

Selection tables, 4-pole motors

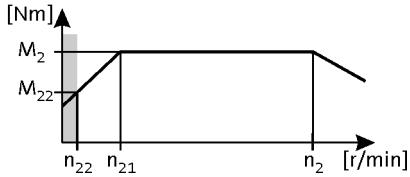

50 Hz: P_N = 22.0 kW
87 Hz: P_N = 38.5 kW

3-stage gearboxes

Mains operation 400 V, 50 Hz			Inverter operation 5 Hz -		- 20 ... 25 Hz		- 50 Hz (1:10)			- 87 Hz (1:17.4)			i	Product		
n_2 [r/min]	M_2 [Nm]	c	n_{22} [r/min]	M_{22} [Nm]	n_{21} [r/min]	M_2 [Nm]	n_2 [r/min]	M_2 [Nm]	c	n_2 [r/min]	M_2 [Nm]	c		g500	m5□□	
30	6777	1.2	2.9	3727	15	6777	30	6777	1.2				49.600	-B8000	40-P180/L4	
27	7471	1.7	2.7	4109	13	7471	27	7471	1.7				54.680	-B13000	40-P180/L4	
27	7482	1.1	2.6	4115	13	7482	27	7482	1.1				54.760	-B8000	40-P180/L4	
24	8277	2.4	2.4	4552	12	8277	24	8277	2.4				60.580	-B20000	40-P180/L4	
24	8480	1.5	2.3	4664	12	8456	24	8480	1.5	42	8456	1.5	62.070	-B13000	40-P180/L4	
24	8509	0.9	2.3	4680	12	8484	24	8509	0.9	41	8484	0.9	62.280	-B8000	40-P180/L4	
22	9203	2.1	2.2	5061	11	9203	22	9203	2.1				67.360	-B20000	40-P180/L4	
22	9237	1.4	2.1	5080	11	9210	22	9237	1.4	38	9210	1.3	67.610	-B13000	40-P180/L4	
21	9640	0.8	2.1	5302	10	9640	21	9640	0.8				70.560	-B8000	40-P180/L4	
20	10158	1.9	2.0	5586	9.9	10158	20	10158	1.9				74.350	-B20000	40-P180/L4	
19	10415	1.3	1.9	5728	9.6	10385	19	10415	1.3	34	10385	1.2	76.230	-B13000	40-P180/L4	
18	11400	1.7	1.7	6269	8.8	11400	18	11400	1.7				83.440	-B20000	40-P180/L4	
17	11683	1.1	1.7	6425	8.6	11649	17	11683	1.1	30	11649	1.1	85.510	-B13000	40-P180/L4	
16	12918	1.5	1.5	7104	7.8	12918	16	12918	1.5				94.550	-B20000	40-P180/L4	
15	13093	1.0	1.5	7200	7.7	13055	15	13093	1.0	27	13055	0.9	95.830	-B13000	40-P180/L4	
14	14286	1.4	1.4	7856	7.0	14286	14	14286	1.4				104.560	-B20000	40-P180/L4	
14	14581	0.9	1.4	8019	6.9	14538	14	14581	0.9	24	14538	0.9	106.720	-B13000	40-P180/L4	
13	15985	1.2	1.2	8791	6.3	15939	13	15985	1.2	22	15939	1.2	117.000	-B20000	40-P180/L4	
11	17768	1.1	1.1	9772	5.7	17717	11	17768	1.1	20	17717	1.1	130.050	-B20000	40-P180/L4	

Selection tables, 4-pole motors

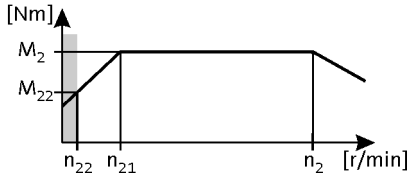

50 Hz: P_N = 30.0 kW
87 Hz: P_N = 52.5 kW

3-stage gearboxes

Mains operation 400 V, 50 Hz			Inverter operation 5 Hz -		- 20 ... 25 Hz		- 50 Hz (1:10)			- 87 Hz (1:17.4)			i	Product		
n_2 [r/min]	M_2 [Nm]	c	n_{22} [r/min]	M_{22} [Nm]	n_{21} [r/min]	M_2 [Nm]	n_2 [r/min]	M_2 [Nm]	c	n_2 [r/min]	M_2 [Nm]	c		g500	m5□□	
269	1010	2.1	26	446	109	1010	269	1010	2.1				5.488	-B4300	50-P180/V4	
212	1284	1.9	21	567	86	1284	212	1284	1.9				6.976	-B4300	50-P180/V4	
183	1498	2.5	18	824	91	1498	183	1498	2.5				8.040	-B8000	40-P200/M4	
167	1636	3.9	17	900	84	1636	167	1636	3.9				8.780	-B13000	40-P200/M4	
161	1686	1.6	16	744	66	1686	161	1686	1.6				9.156	-B4300	50-P180/V4	
150	1828	2.1	15	1005	75	1828	150	1828	2.1				9.810	-B8000	40-P200/M4	
147	1865	3.5	15	1026	73	1865	147	1865	3.5				10.010	-B13000	40-P200/M4	
146	1866	2.1	14	824	59	1866	146	1866	2.1				10.137	-B4300	50-P180/V4	
131	2098	1.9	13	1154	65	2098	131	2098	1.9				11.260	-B8000	40-P200/M4	
121	2273	3.0	12	1250	60	2273	121	2273	3.0				12.200	-B13000	40-P200/M4	
118	2318	1.7	12	1275	59	2318	118	2318	1.7				12.440	-B8000	40-P200/M4	
115	2372	1.8	11	1047	47	2372	115	2372	1.8				12.885	-B4300	50-P180/V4	
104	2636	1.6	10	1450	52	2636	104	2636	1.6				14.150	-B8000	40-P200/M4	
87	3114	1.4	8.6	1375	36	3114	87	3114	1.4				16.913	-B4300	50-P180/V4	
70	3878	1.1	6.9	1712	29	3878	70	3878	1.1				21.065	-B4300	50-P180/V4	
66	4145	1.7	6.5	2280	33	4145	66	4145	1.7				22.250	-B8000	40-P200/M4	
64	4273	1.0	6.2	1886	26	4273	64	4273	1.0				23.206	-B4300	50-P180/V4	
62	4434	2.9	6.1	2439	31	4434	62	4434	2.9				23.800	-B13000	40-P200/M4	
58	4714	1.6	5.7	2593	29	4714	58	4714	1.6				25.300	-B8000	40-P200/M4	
54	5034	2.6	5.4	2769	27	5034	54	5034	2.6				27.020	-B13000	40-P200/M4	
51	5340	1.4	5.1	2937	26	5340	51	5340	1.4				28.660	-B8000	40-P200/M4	
50	5483	2.4	4.9	3016	25	5483	50	5483	2.4				29.430	-B13000	40-P200/M4	
46	6023	1.3	4.5	3313	23	6023	46	6023	1.3				32.330	-B8000	40-P200/M4	
42	6595	1.2	4.1	3628	21	6595	42	6595	1.2				35.400	-B8000	40-P200/M4	
37	7328	1.8	3.7	4031	19	7328	37	7328	1.8				39.330	-B13000	40-P200/M4	
34	8045	1.0	3.4	4425	17	8045	34	8045	1.0				43.180	-B8000	40-P200/M4	
33	8358	1.6	3.2	4597	16	8358	33	8358	1.6				44.860	-B13000	40-P200/M4	
30	9241	0.9	2.9	5083	15	9241	30	9241	0.9				49.600	-B8000	40-P200/M4	
27	10187	1.3	2.7	5604	13	10187	27	10187	1.3				54.680	-B13000	40-P200/M4	
24	11287	1.7	2.4	6208	12	11287	24	11287	1.7				60.580	-B20000	40-P200/M4	
24	11564	1.1	2.3	6361	12	11564	24	11564	1.1				62.070	-B13000	40-P200/M4	
22	12550	1.6	2.2	6903	11	12550	22	12550	1.6				67.360	-B20000	40-P200/M4	
22	12596	1.0	2.1	6929	11	12596	22	12596	1.0				67.610	-B13000	40-P200/M4	
20	13852	1.4	2.0	7619	9.9	13852	20	13852	1.4				74.350	-B20000	40-P200/M4	
19	14202	0.9	1.9	7812	9.6	14161	19	14202	0.9	34	14161	0.9	76.230	-B13000	40-P200/M4	

Selection tables, 4-pole motors

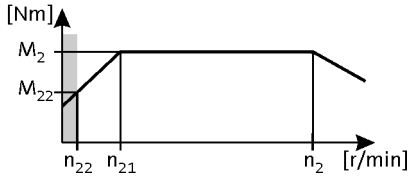

50 Hz: P_N = 30.0 kW
87 Hz: P_N = 52.5 kW

3-stage gearboxes

Mains operation 400 V, 50 Hz			Inverter operation 5 Hz -		- 20 ... 25 Hz		- 50 Hz (1:10)			- 87 Hz (1:17.4)			i	Product		
n_2 [r/min]	M_2 [Nm]	c	n_{22} [r/min]	M_{22} [Nm]	n_{21} [r/min]	M_2 [Nm]	n_2 [r/min]	M_2 [Nm]	c	n_2 [r/min]	M_2 [Nm]	c		g500	m5□□	
18	15546	1.3	1.7	8551	8.8	15546	18	15546	1.3				83.440	-B20000	40-P200/M4	
17	15931	0.8	1.7	8763	8.6	15931	17	15931	0.8				85.510	-B13000	40-P200/M4	
16	17615	1.1	1.5	9689	7.8	17615	16	17615	1.1				94.550	-B20000	40-P200/M4	
14	19480	1.0	1.4	10715	7.0	19480	14	19480	1.0				104.560	-B20000	40-P200/M4	
13	21798	0.9	1.2	11990	6.3	21735	13	21798	0.9	22	21735	0.9	117.000	-B20000	40-P200/M4	

Selection tables, 4-pole motors

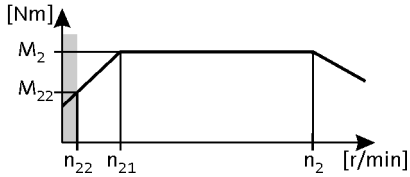

50 Hz: P_N = 37.0 kW
87 Hz: P_N = 64.8 kW

3-stage gearboxes

Mains operation 400 V, 50 Hz			Inverter operation 5 Hz -		- 20 ... 25 Hz		- 50 Hz (1:10)			- 87 Hz (1:17.4)			i	Product		
n_2 [r/min]	M_2 [Nm]	c	n_{22} [r/min]	M_{22} [Nm]	n_{21} [r/min]	M_2 [Nm]	n_2 [r/min]	M_2 [Nm]	c	n_2 [r/min]	M_2 [Nm]	c		g500	m5□□	
151	2242	1.7	15	1229	75	2242	151	2242	1.7				9.810	-B8000	40-P225/M4	
148	2288	2.9	15	1254	74	2288	148	2288	2.9				10.010	-B13000	40-P225/M4	
131	2573	1.5	13	1410	66	2573	131	2573	1.5				11.260	-B8000	40-P225/M4	
121	2788	2.4	12	1528	61	2788	121	2788	2.4				12.200	-B13000	40-P225/M4	
119	2843	1.4	12	1558	60	2843	119	2843	1.4				12.440	-B8000	40-P225/M4	
105	3234	1.3	10	1772	52	3234	105	3234	1.3				14.150	-B8000	40-P225/M4	
58	5782	1.3	5.7	3169	29	5782	58	5782	1.3				25.300	-B8000	40-P225/M4	
55	6175	2.1	5.4	3384	27	6175	55	6175	2.1				27.020	-B13000	40-P225/M4	
52	6550	1.2	5.1	3589	26	6550	52	6550	1.2				28.660	-B8000	40-P225/M4	
50	6726	1.9	4.9	3686	25	6726	50	6726	1.9				29.430	-B13000	40-P225/M4	
46	7389	1.1	4.5	4049	23	7389	46	7389	1.1				32.330	-B8000	40-P225/M4	
42	8090	1.0	4.1	4433	21	8090	42	8090	1.0				35.400	-B8000	40-P225/M4	
38	8988	1.5	3.7	4926	19	8988	38	8988	1.5				39.330	-B13000	40-P225/M4	
34	9868	0.8	3.4	5408	17	9868	34	9868	0.8				43.180	-B8000	40-P225/M4	
33	10252	1.3	3.2	5618	17	10252	33	10252	1.3				44.860	-B13000	40-P225/M4	
27	12496	1.0	2.7	6848	14	12496	27	12496	1.0				54.680	-B13000	40-P225/M4	
24	14185	0.9	2.3	7773	12	14185	24	14185	0.9				62.070	-B13000	40-P225/M4	
22	15394	1.3	2.2	8436	11	15394	22	15394	1.3				67.360	-B20000	40-P225/M4	
22	15451	0.8	2.1	8467	11	15451	22	15451	0.8				67.610	-B13000	40-P225/M4	
20	16992	1.2	2.0	9311	10	16992	20	16992	1.2				74.350	-B20000	40-P225/M4	
18	19069	1.0	1.7	10450	8.9	19069	18	19069	1.0				83.440	-B20000	40-P225/M4	
16	21608	0.9	1.5	11841	7.8	21608	16	21608	0.9				94.550	-B20000	40-P225/M4	
14	23896	0.8	1.4	13095	7.1	23896	14	23896	0.8				104.560	-B20000	40-P225/M4	

Selection tables, 4-pole motors

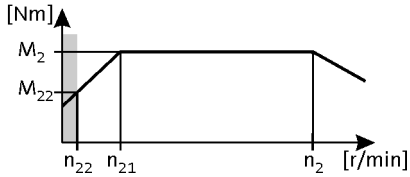

50 Hz: P_N = 45.0 kW
87 Hz: P_N = 78.7 kW

3-stage gearboxes

Mains operation 400 V, 50 Hz			Inverter operation 5 Hz -		- 20 ... 25 Hz		- 50 Hz (1:10)			- 87 Hz (1:17.4)			i	Product		
n_2 [r/min]	M_2 [Nm]	c	n_{22} [r/min]	M_{22} [Nm]	n_{21} [r/min]	M_2 [Nm]	n_2 [r/min]	M_2 [Nm]	c	n_2 [r/min]	M_2 [Nm]	c		g500	m5□□	
151	2727	1.4	15	1501	75	2727	151	2727	1.4				9.810	-B8000	40-P225/L4	
148	2782	2.4	15	1531	74	2782	148	2782	2.4				10.010	-B13000	40-P225/L4	
131	3130	1.3	13	1722	66	3130	131	3130	1.3				11.260	-B8000	40-P225/L4	
121	3391	2.0	12	1866	61	3391	121	3391	2.0				12.200	-B13000	40-P225/L4	
119	3458	1.2	12	1903	60	3458	119	3458	1.2				12.440	-B8000	40-P225/L4	
105	3933	1.1	10	2164	52	3933	105	3933	1.1				14.150	-B8000	40-P225/L4	
52	7966	1.0	5.1	4384	26	7966	52	7966	1.0				28.660	-B8000	40-P225/L4	
50	8180	1.6	4.9	4502	25	8180	50	8180	1.6				29.430	-B13000	40-P225/L4	
46	8986	0.9	4.5	4945	23	8986	46	8986	0.9				32.330	-B8000	40-P225/L4	
38	10932	1.2	3.7	6016	19	10932	38	10932	1.2				39.330	-B13000	40-P225/L4	
33	12469	1.0	3.2	6862	17	12469	33	12469	1.0				44.860	-B13000	40-P225/L4	
27	15198	0.9	2.7	8364	14	15198	27	15198	0.9				54.680	-B13000	40-P225/L4	
22	18723	1.0	2.2	10303	11	18723	22	18723	1.0				67.360	-B20000	40-P225/L4	
20	20666	0.9	2.0	11373	10	20666	20	20666	0.9				74.350	-B20000	40-P225/L4	
18	23192	0.8	1.7	12763	8.9	23192	18	23192	0.8				83.440	-B20000	40-P225/L4	

Selection tables, 4-pole motors

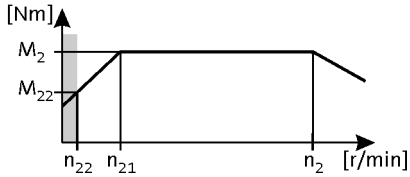

50 Hz: P_N = 55.0 kW
87 Hz: P_N = 87.0 kW

3-stage gearboxes

Mains operation 400 V, 50 Hz			Inverter operation 5 Hz -		- 20 ... 25 Hz		- 50 Hz (1:10)			- 87 Hz (1:17.4)			i	Product		
n_2 [r/min]	M_2 [Nm]	c	n_{22} [r/min]	M_{22} [Nm]	n_{21} [r/min]	M_2 [Nm]	n_2 [r/min]	M_2 [Nm]	c	n_2 [r/min]	M_2 [Nm]	c		g500	m5□□	
132	3815	1.0	13	2099	66	3815	132	3815	1.0				11.260	-B8000	40-P250/M4	
122	4133	1.6	12	2274	61	4133	122	4133	1.6				12.200	-B13000	40-P250/M4	
119	4215	1.0	12	2319	60	4215	119	4215	1.0				12.440	-B8000	40-P250/M4	
105	4794	0.9	10	2638	52	4794	105	4794	0.9				14.150	-B8000	40-P250/M4	
50	9971	1.3	4.9	5486	25	9971	50	9971	1.3				29.430	-B13000	40-P250/M4	
33	15199	0.9	3.2	8363	17	15199	33	15199	0.9				44.860	-B13000	40-P250/M4	

Dimensions, notes

Notes on the dimensions

The following legend shows the layout of the dimension sheets.

Product gearbox

g500-B110

Driven shaft design

Abmessungen mit Hohlwelle

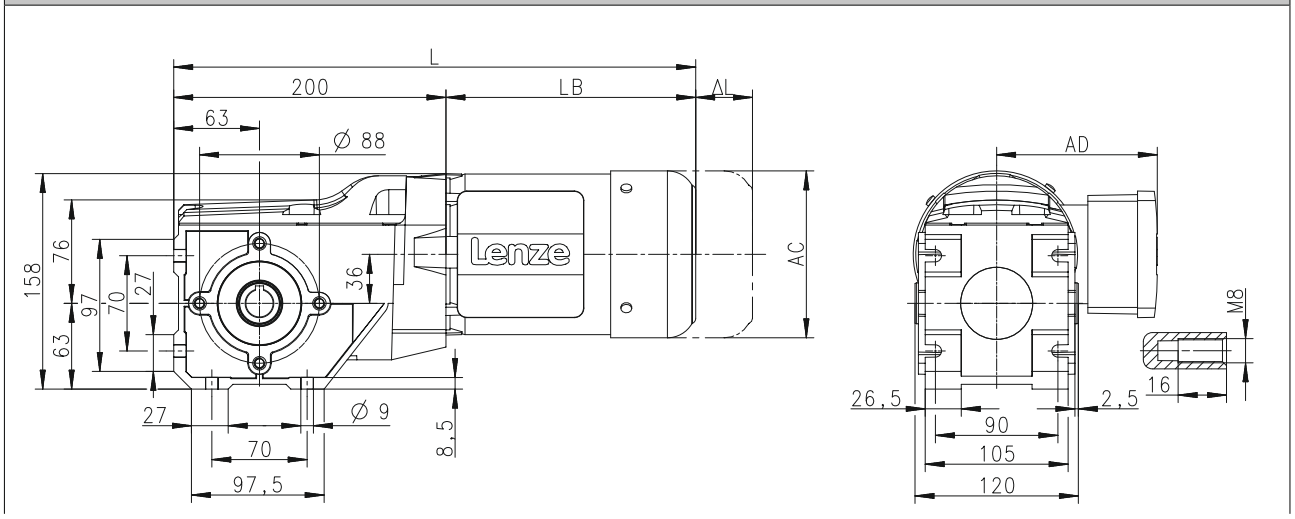

Product Motor

			MD□MA□□				
			063-12	063-32	063-42	071-32	071-42
Gesamtlänge	L	[mm]	383			403	
Länge Motor	LB	[mm]	183			203	
Länge Motoranbauten	ΔL	[mm]	170			165	
Motordurchmesser	AC	[mm]	123			139	
Abstand Motor/Anschluss	AD	[mm]	100			109	

Distance of motor centre to the end of terminal box

Total length of the drive without built-on accessories

Motor diameter

Motor length without built-on accessories

Additional length of the built-on accessories (longest version)

Dimensions, 4-pole motors

g500-B45

Dimensions with hollow shaft
Gearbox design: HBR, HAR, HAK

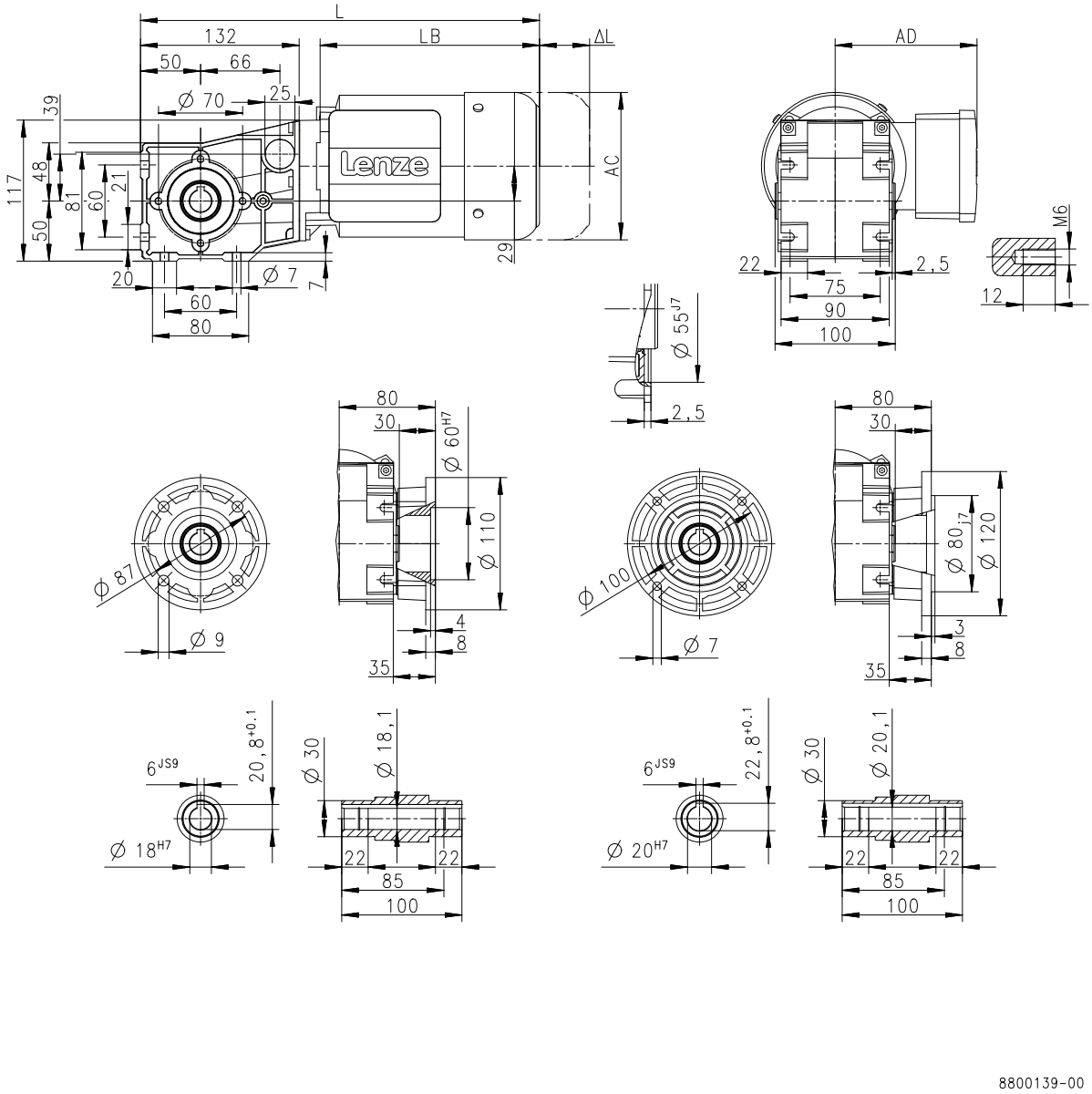

			MD□MA□□						
			063-02	063-12	063-22	063-32	063-42	071-32	071-42
Total length	L	[mm]	305	332	305	332		352	
Motor length	LB	[mm]	156	183	156	183		203	
Length of motor options	Δ L	[mm]	135	170	135	170		165	
Motor diameter	AC	[mm]	123					139	
Distance motor/connection	AD	[mm]	100					109	

L = length of the motor without built-on accessories
ΔL = additional length of the built-on accessories (longest type)

Dimensions, 4-pole motors

g500-B45

Dimensions hollow shaft with shrink disc
Gearbox design: SBR, SAR, SAK

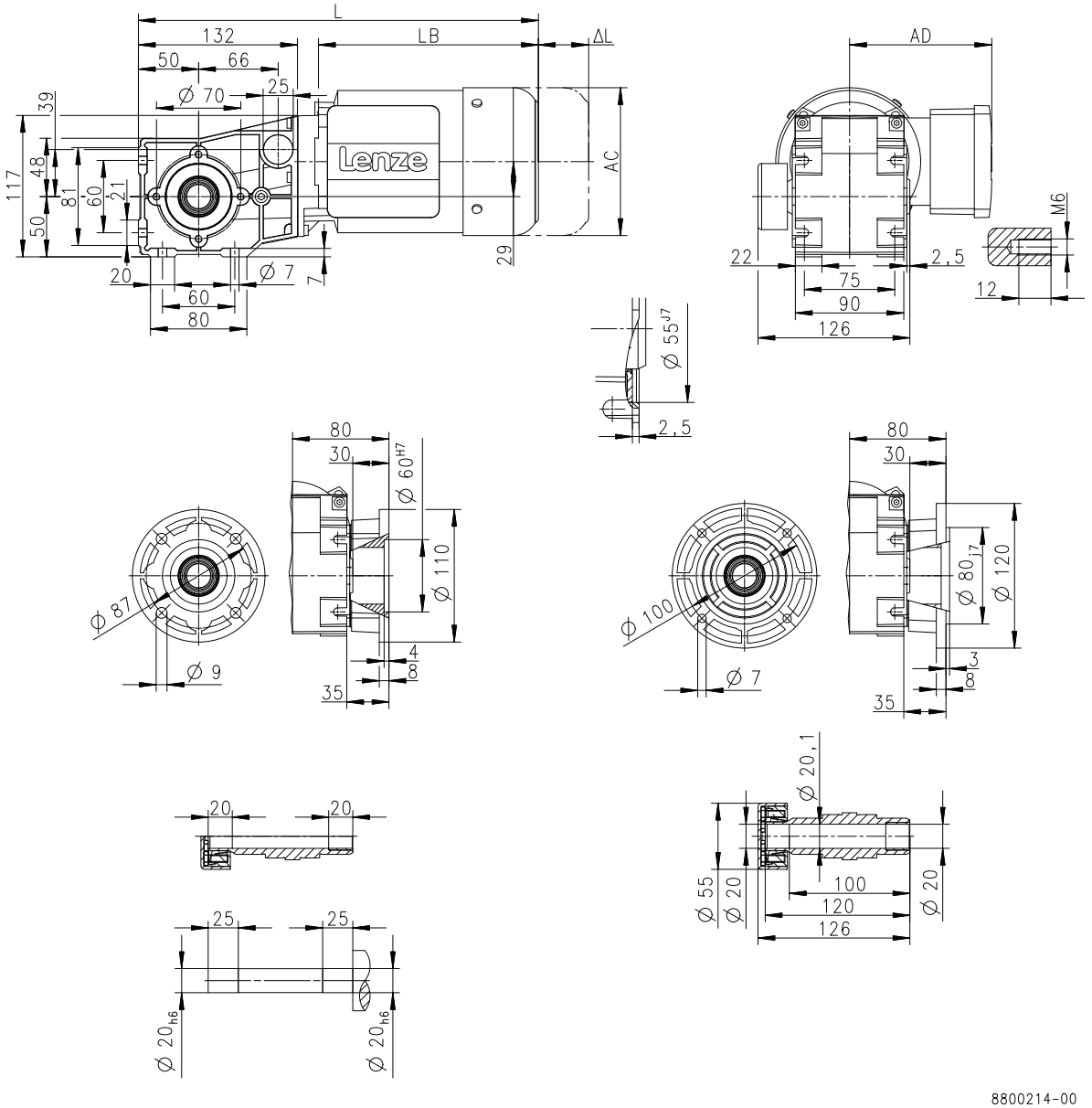

			MD□MA□□						
			063-02	063-12	063-22	063-32	063-42	071-32	071-42
Total length	L	[mm]	305	332	305	332		352	
Motor length	LB	[mm]	156	183	156	183		203	
Length of motor options	Δ L	[mm]	135	170	135	170		165	
Motor diameter	AC	[mm]	123					139	
Distance motor/connection	AD	[mm]	100					109	

L = length of the motor without built-on accessories
ΔL = additional length of the built-on accessories (longest type)

Dimensions, 4-pole motors

g500-B45

Dimensions with solid shaft
Gearbox design: VBR, VAR, VAK

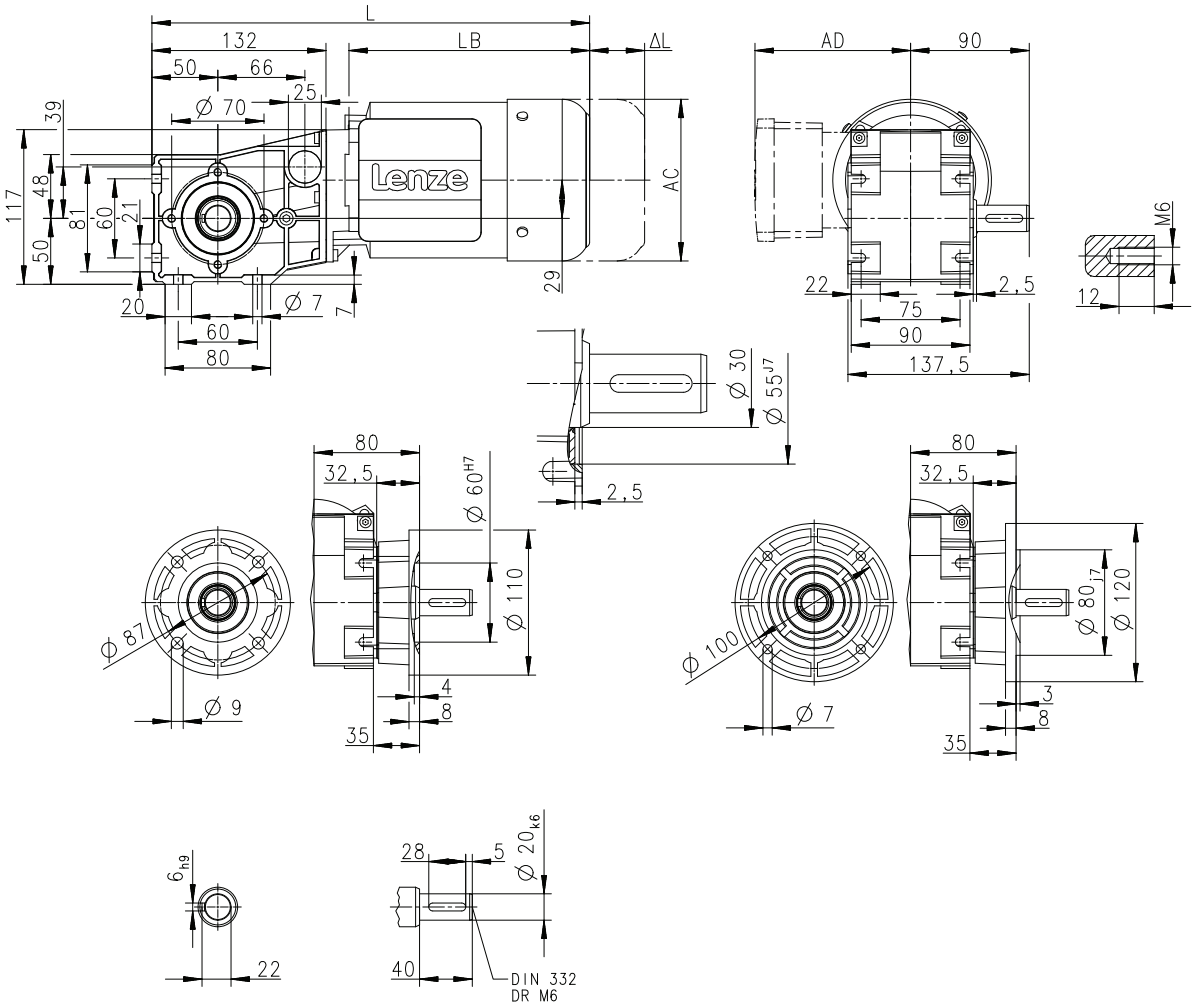

			MD□MA□□						
			063-02	063-12	063-22	063-32	063-42	071-32	071-42
Total length	L	[mm]	305	332	305	332		352	
Motor length	LB	[mm]	156	183	156	183		203	
Length of motor options	Δ L	[mm]	135	170	135	170		165	
Motor diameter	AC	[mm]	123					139	
Distance motor/connection	AD	[mm]	100					109	

L = length of the motor without built-on accessories
ΔL = additional length of the built-on accessories (longest type)

Dimensions, 4-pole motors

g500-B110

Dimensions with hollow shaft
Gearbox design: HBR, HAR, HAK

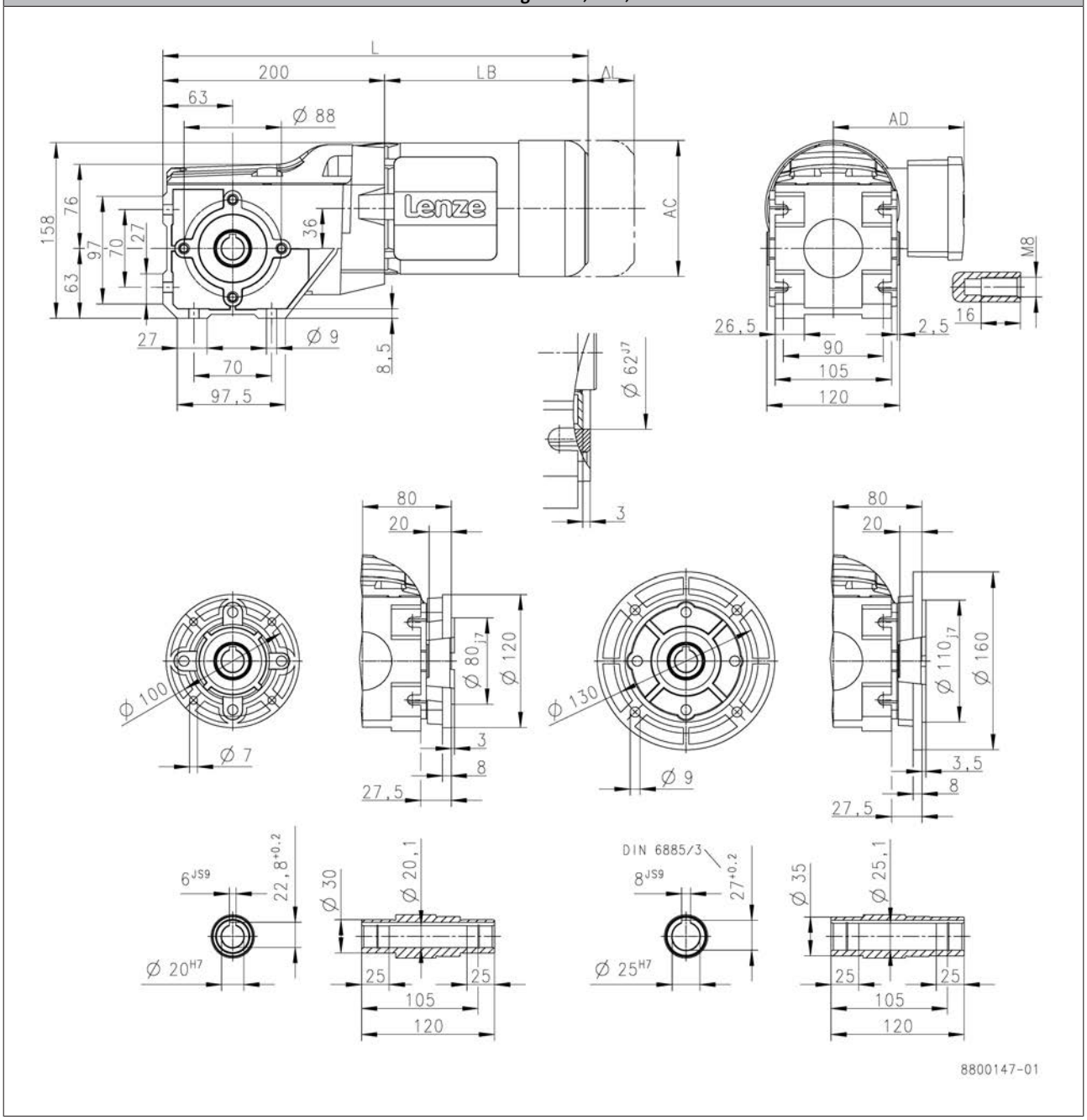

			MD□MA□□				
			063-12	063-32	063-42	071-32	071-42
Total length	L	[mm]	383			403	
Motor length	LB	[mm]	183			203	
Length of motor options	Δ L	[mm]	170			165	
Motor diameter	AC	[mm]	123			139	
Distance motor/connection	AD	[mm]	100			109	

L = length of the motor without built-on accessories
ΔL = additional length of the built-on accessories (longest type)

Dimensions, 4-pole motors

g500-B110

Dimensions with hollow shaft
Gearbox design: HBR, HAR, HAK

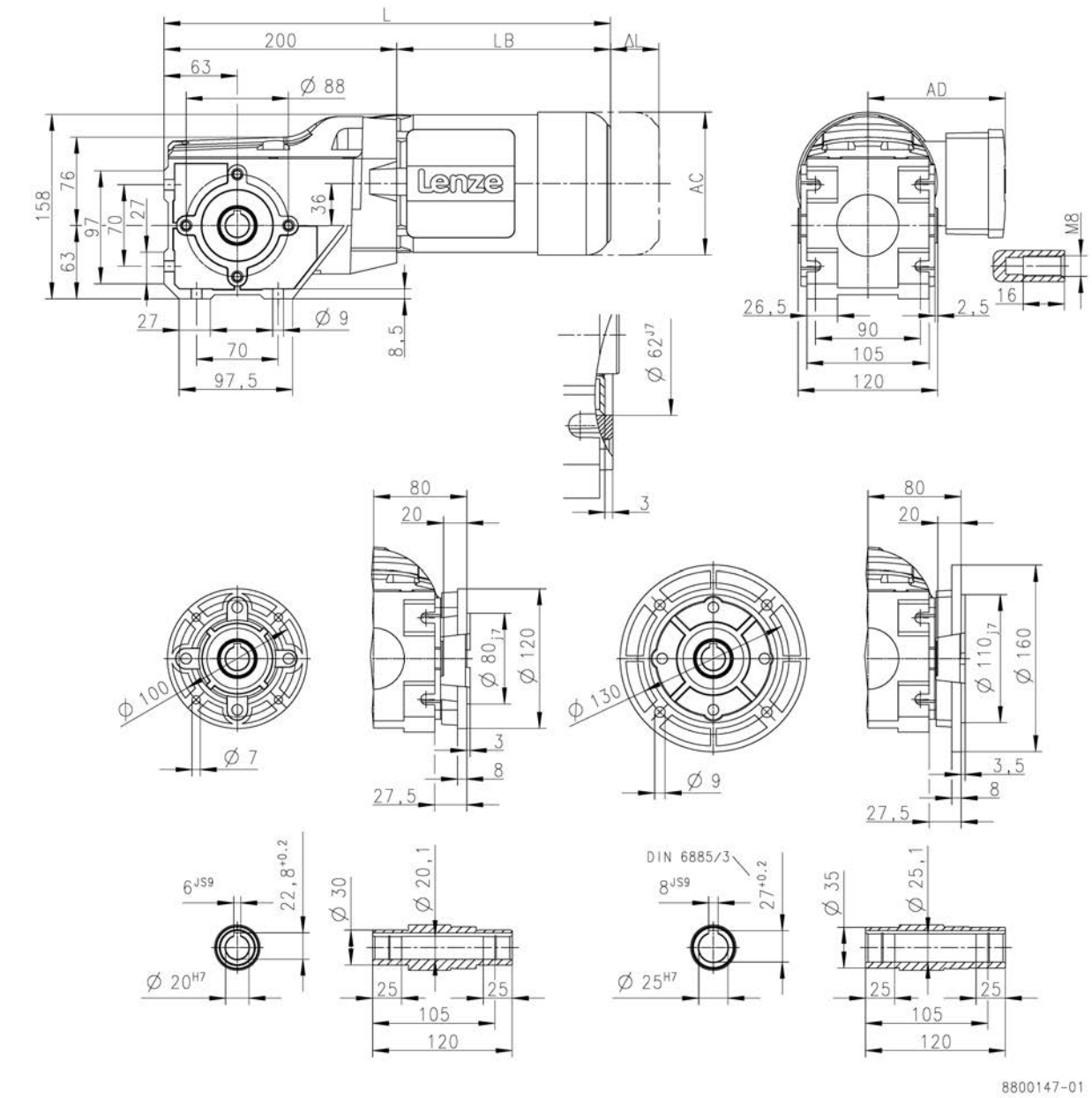

			m550		
			-P80/M4	-P90/M4	-P90/L4
Total length	L	[mm]	460	524	
Motor length	LB	[mm]	260	324	
Length of motor options	Δ L	[mm]	183	175	
Motor diameter	AC	[mm]	157	177	
Distance motor/connection	AD	[mm]	148	154	

L = length of the motor without built-on accessories
ΔL = additional length of the built-on accessories (longest type)

Dimensions, 4-pole motors

g500-B110

Dimensions hollow shaft with shrink disc
Gearbox design: SBR, SAR, SAK

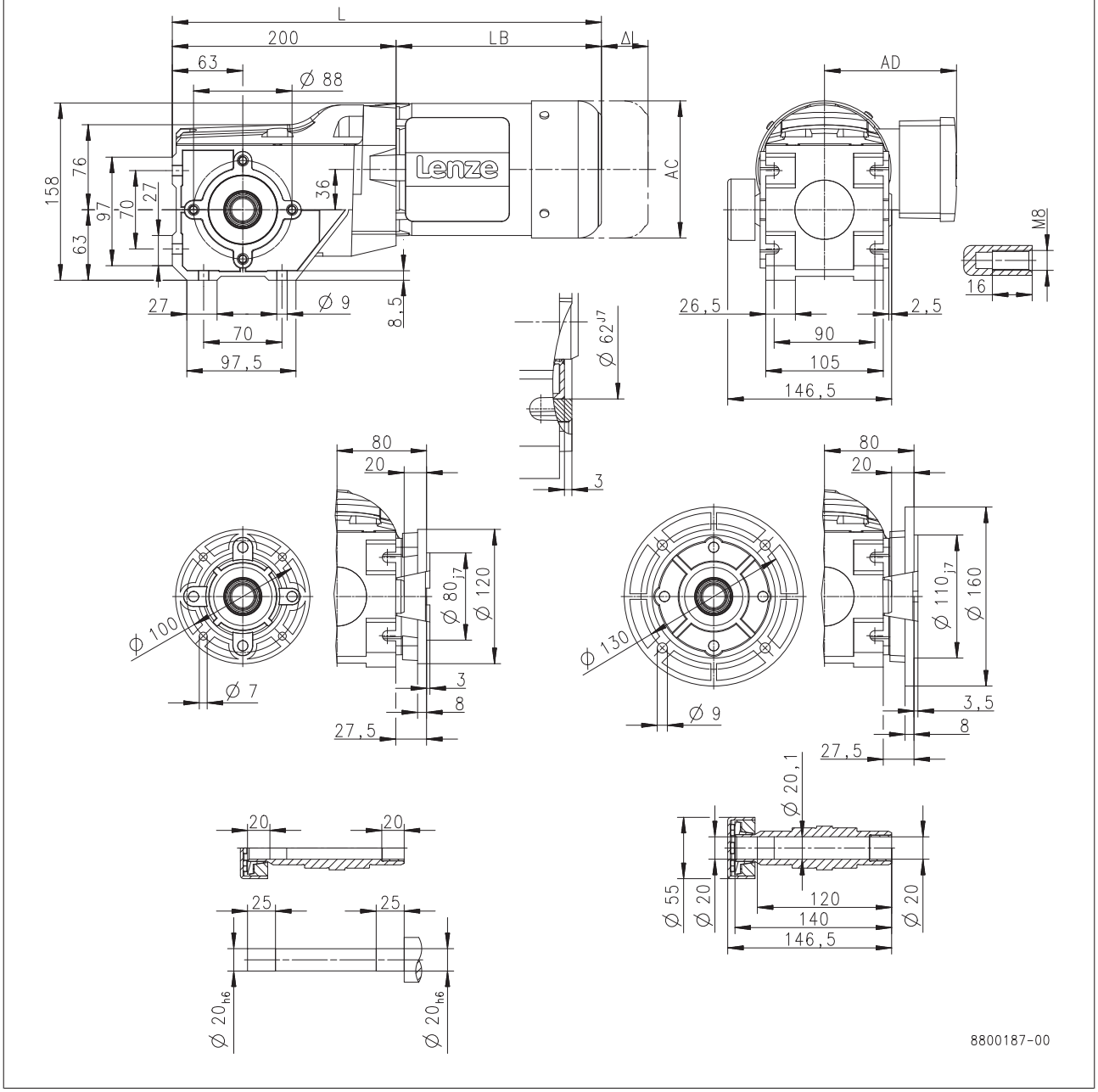

			MD□MA□□				
			063-12	063-32	063-42	071-32	071-42
Total length	L	[mm]	383			403	
Motor length	LB	[mm]	183			203	
Length of motor options	Δ L	[mm]	170			165	
Motor diameter	AC	[mm]	123			139	
Distance motor/connection	AD	[mm]	100			109	

L = length of the motor without built-on accessories
ΔL = additional length of the built-on accessories (longest type)

Dimensions, 4-pole motors

g500-B110

Dimensions hollow shaft with shrink disc
Gearbox design: SBR, SAR, SAK

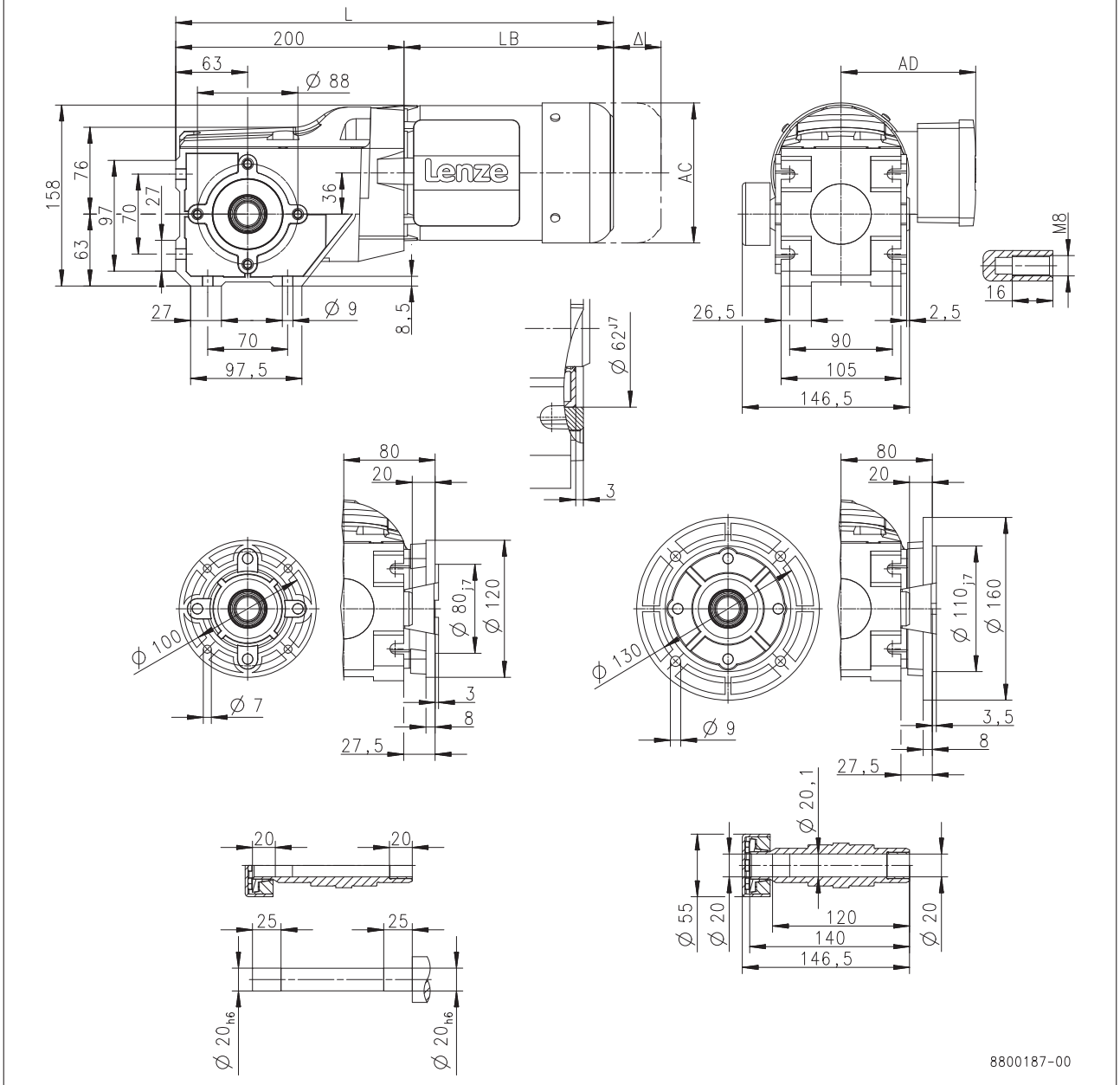

			m550		
			-P80/M4	-P90/M4	-P90/L4
Total length	L	[mm]	460	524	
Motor length	LB	[mm]	260	324	
Length of motor options	Δ L	[mm]	183	175	
Motor diameter	AC	[mm]	157	177	
Distance motor/connection	AD	[mm]	148	154	

L = length of the motor without built-on accessories
ΔL = additional length of the built-on accessories (longest type)

Dimensions, 4-pole motors

g500-B110

Dimensions with solid shaft
Gearbox design: VBR, VAR, VAK

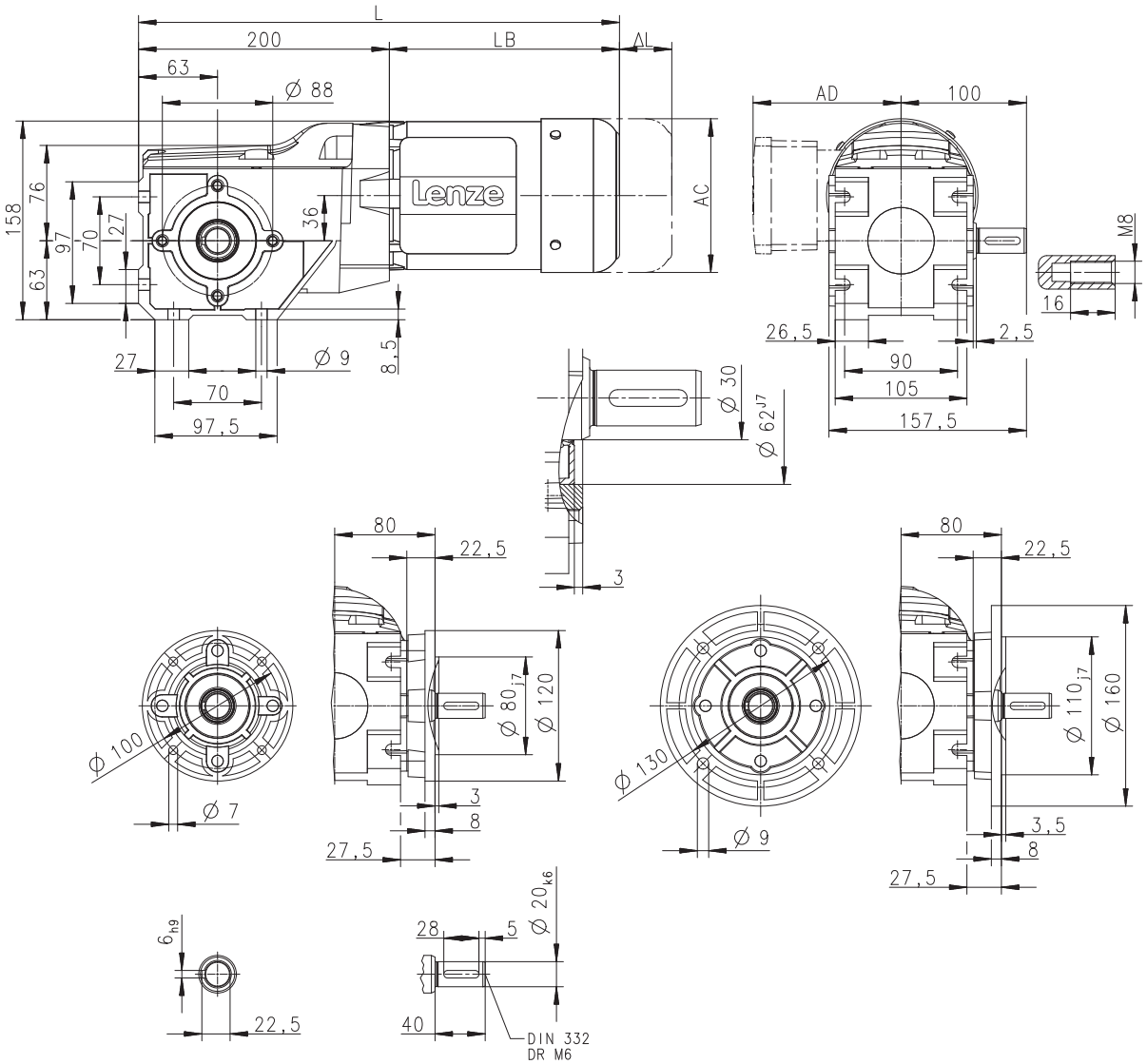

			MD□MA□□				
			063-12	063-32	063-42	071-32	071-42
Total length	L	[mm]	383			403	
Motor length	LB	[mm]	183			203	
Length of motor options	Δ L	[mm]	170			165	
Motor diameter	AC	[mm]	123			139	
Distance motor/connection	AD	[mm]	100			109	

L = length of the motor without built-on accessories
ΔL = additional length of the built-on accessories (longest type)

Dimensions, 4-pole motors

g500-B110

Dimensions with solid shaft
Gearbox design: VBR, VAR, VAK

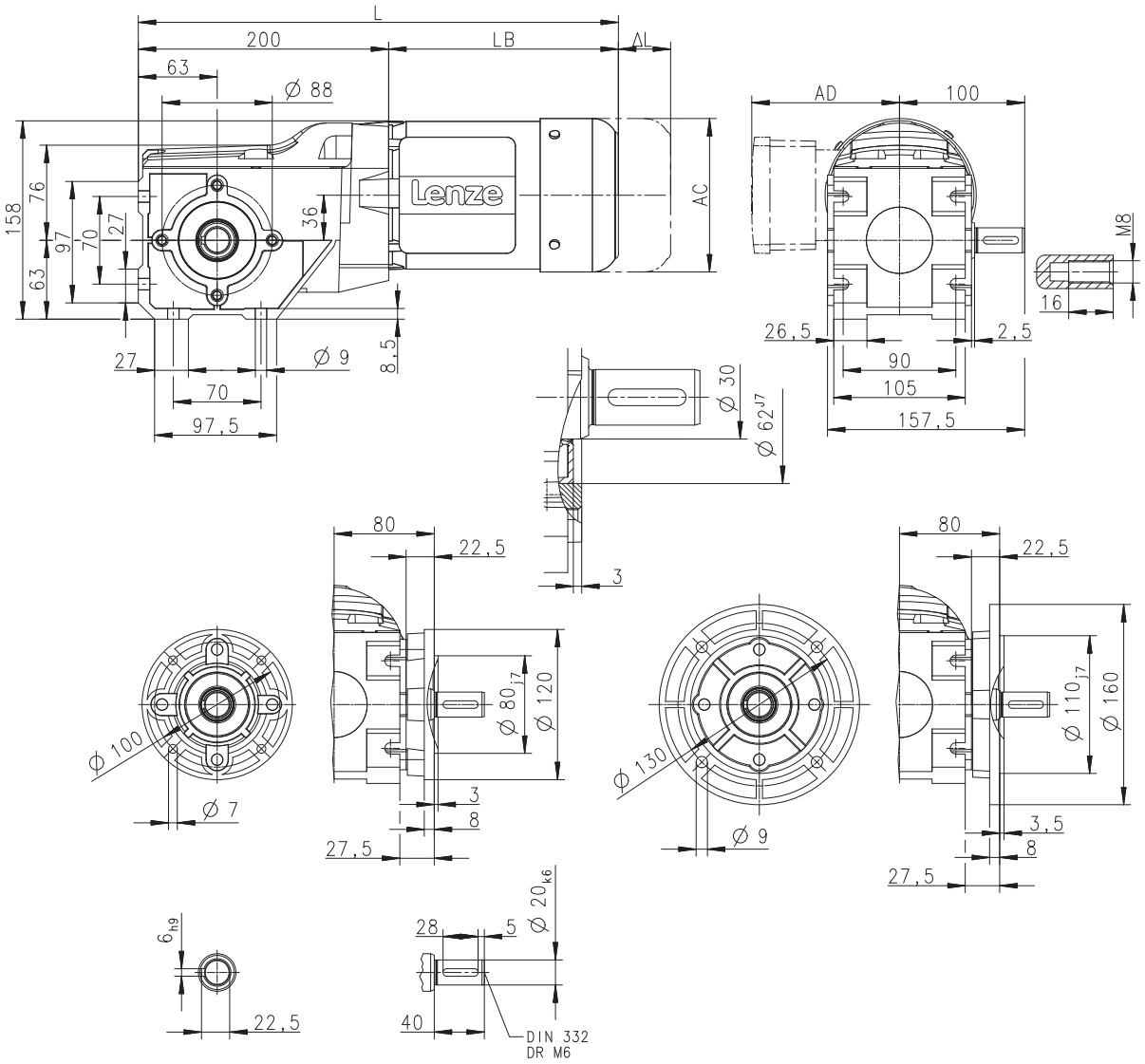

			m550		
			-P80/M4	-P90/M4	-P90/L4
Total length	L	[mm]	460	524	
Motor length	LB	[mm]	260	324	
Length of motor options	Δ L	[mm]	183	175	
Motor diameter	AC	[mm]	157	177	
Distance motor/connection	AD	[mm]	148	154	

L = length of the motor without built-on accessories
ΔL = additional length of the built-on accessories (longest type)

Dimensions, 4-pole motors

g500-B240

Dimensions with hollow shaft
Gearbox design: HBR, HAR, HAK

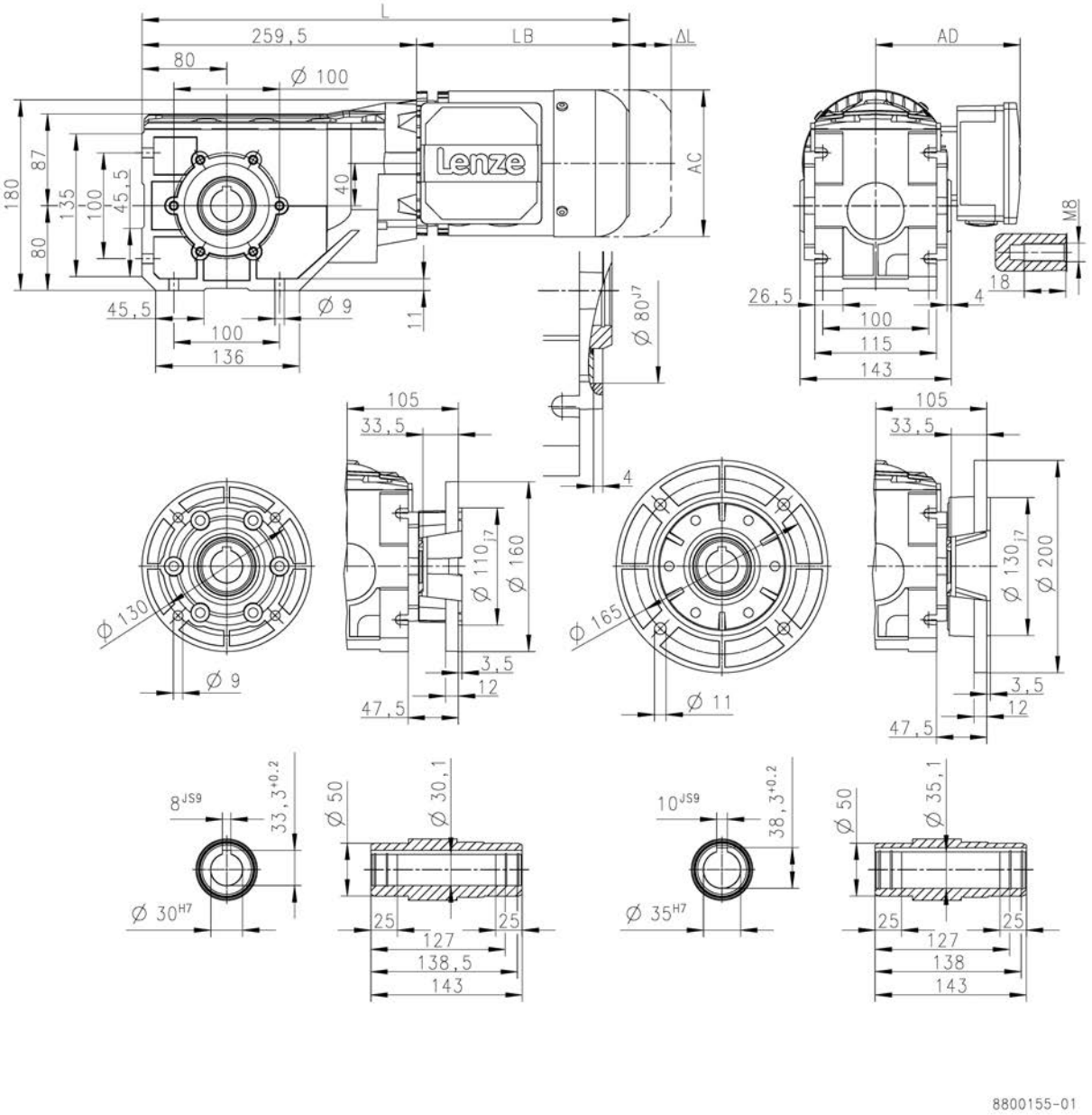

			MD□MA□□				
			063-12	063-32	063-42	071-32	071-42
Total length	L	[mm]	443			463	
Motor length	LB	[mm]	183			203	
Length of motor options	Δ L	[mm]	170			165	
Motor diameter	AC	[mm]	123			139	
Distance motor/connection	AD	[mm]	100			109	

L = length of the motor without built-on accessories
ΔL = additional length of the built-on accessories (longest type)

Dimensions, 4-pole motors

g500-B240

Dimensions with hollow shaft
Gearbox design: HBR, HAR, HAK

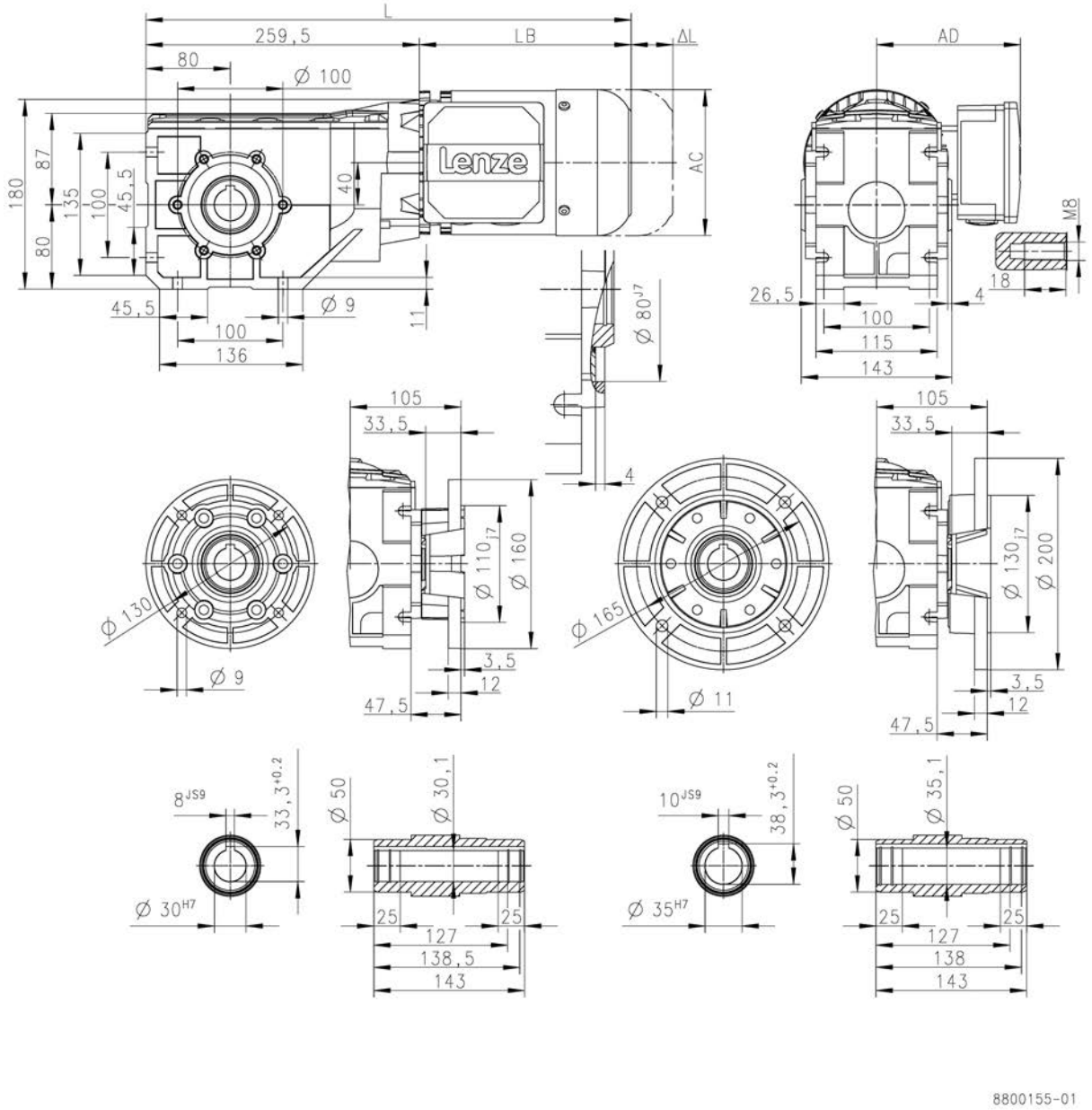

			m550				
			-P80/M4	-P90/M4	-P90/L4	-P100/M4	-P100/L4
Total length	L	[mm]	520	584		644	
Motor length	LB	[mm]	260	324		384	
Length of motor options	Δ L	[mm]	183	175		170	
Motor diameter	AC	[mm]	157	177		195	
Distance motor/connection	AD	[mm]	148	154		164	

L = length of the motor without built-on accessories
ΔL = additional length of the built-on accessories (longest type)

Dimensions, 4-pole motors

g500-B240

Dimensions hollow shaft with shrink disc
Gearbox design: SBR, SAR, SAK

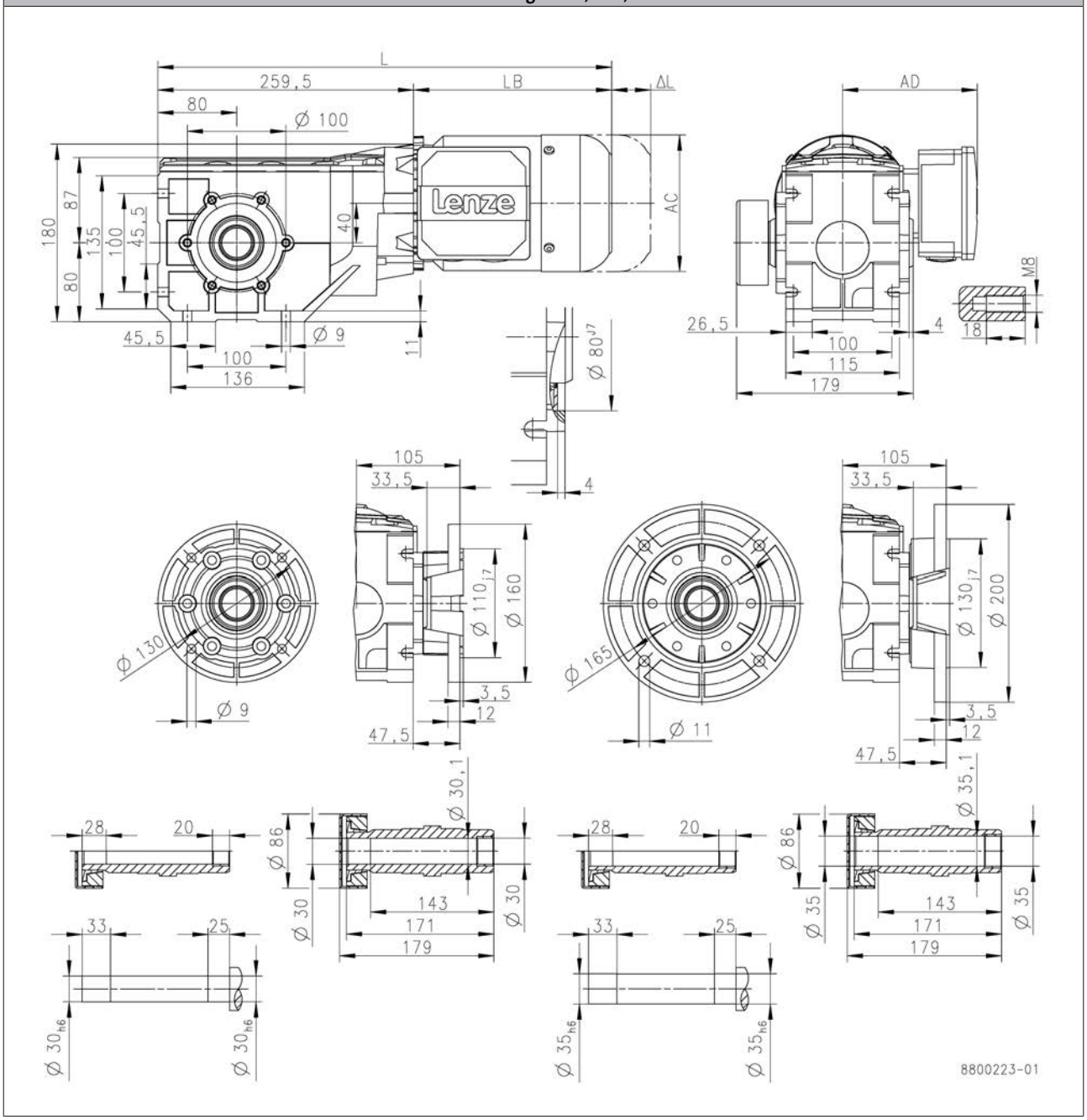

			MD□MA□□				
			063-12	063-32	063-42	071-32	071-42
Total length	L	[mm]	443			463	
Motor length	LB	[mm]	183			203	
Length of motor options	Δ L	[mm]	170			165	
Motor diameter	AC	[mm]	123			139	
Distance motor/connection	AD	[mm]	100			109	

L = length of the motor without built-on accessories
ΔL = additional length of the built-on accessories (longest type)

Dimensions, 4-pole motors

g500-B240

Dimensions hollow shaft with shrink disc
Gearbox design: SBR, SAR, SAK

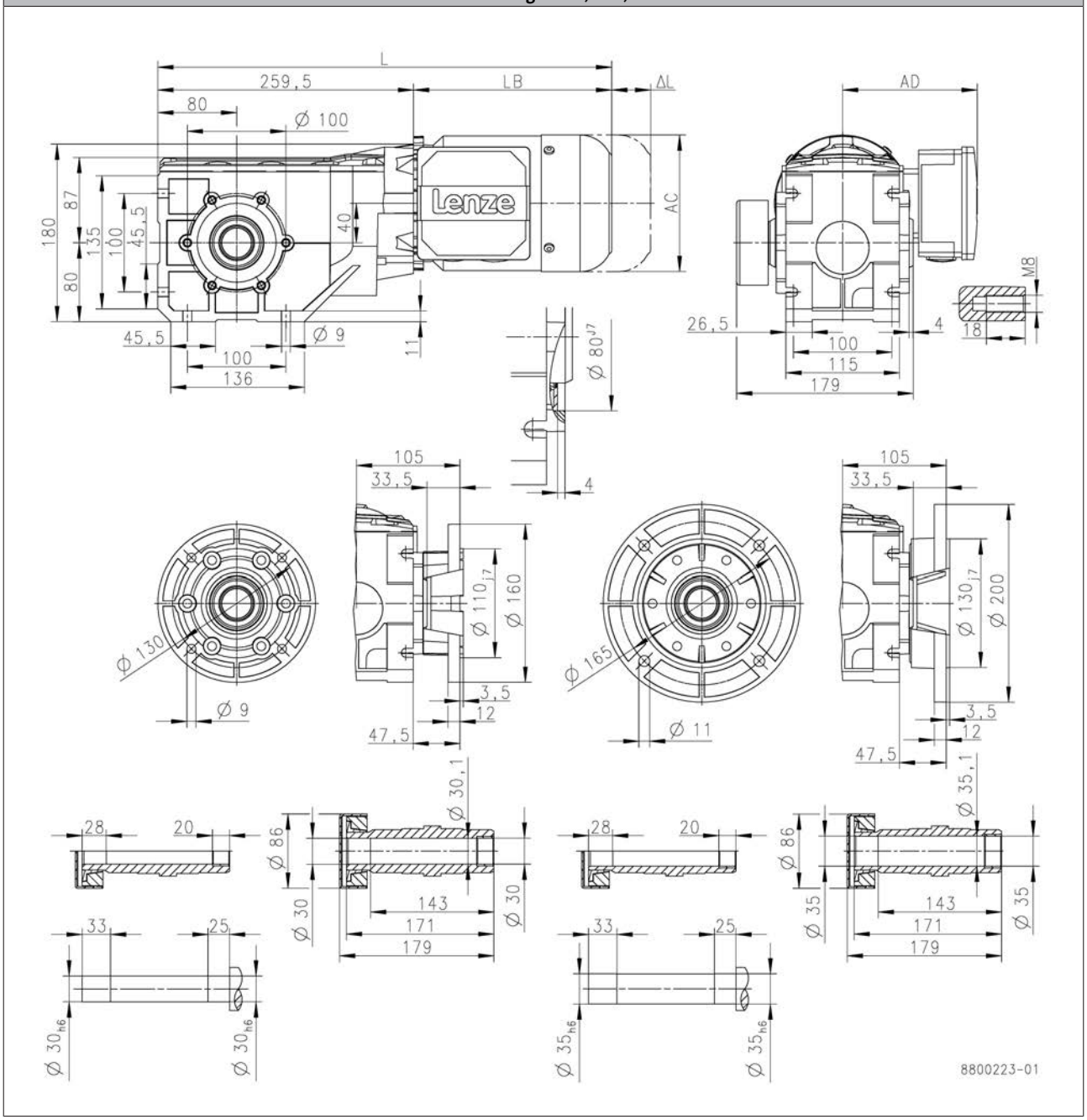

			m550				
			-P80/M4	-P90/M4	-P90/L4	-P100/M4	-P100/L4
Total length	L	[mm]	520	584		644	
Motor length	LB	[mm]	260	324		384	
Length of motor options	Δ L	[mm]	183	175		170	
Motor diameter	AC	[mm]	157	177		195	
Distance motor/connection	AD	[mm]	148	154		164	

L = length of the motor without built-on accessories
ΔL = additional length of the built-on accessories (longest type)

Dimensions, 4-pole motors

g500-B240

Dimensions with solid shaft
Gearbox design: VBR, VAR, VAK

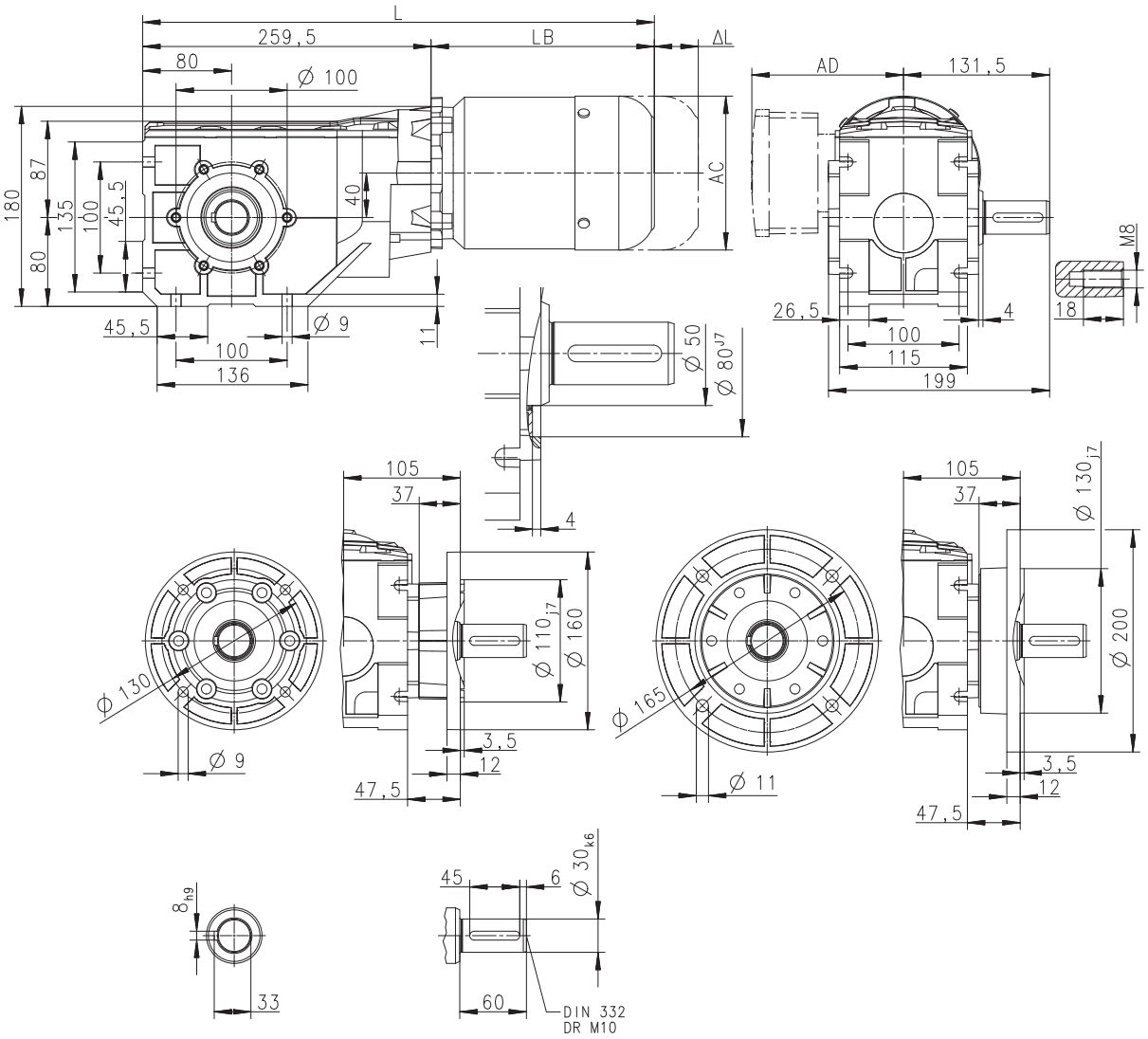

			MD□MA□□				
			063-12	063-32	063-42	071-32	071-42
Total length	L	[mm]	443			463	
Motor length	LB	[mm]	183			203	
Length of motor options	Δ L	[mm]	170			165	
Motor diameter	AC	[mm]	123			139	
Distance motor/connection	AD	[mm]	100			109	

L = length of the motor without built-on accessories
ΔL = additional length of the built-on accessories (longest type)

Dimensions, 4-pole motors

g500-B240

Dimensions with solid shaft
Gearbox design: VBR, VAR, VAK

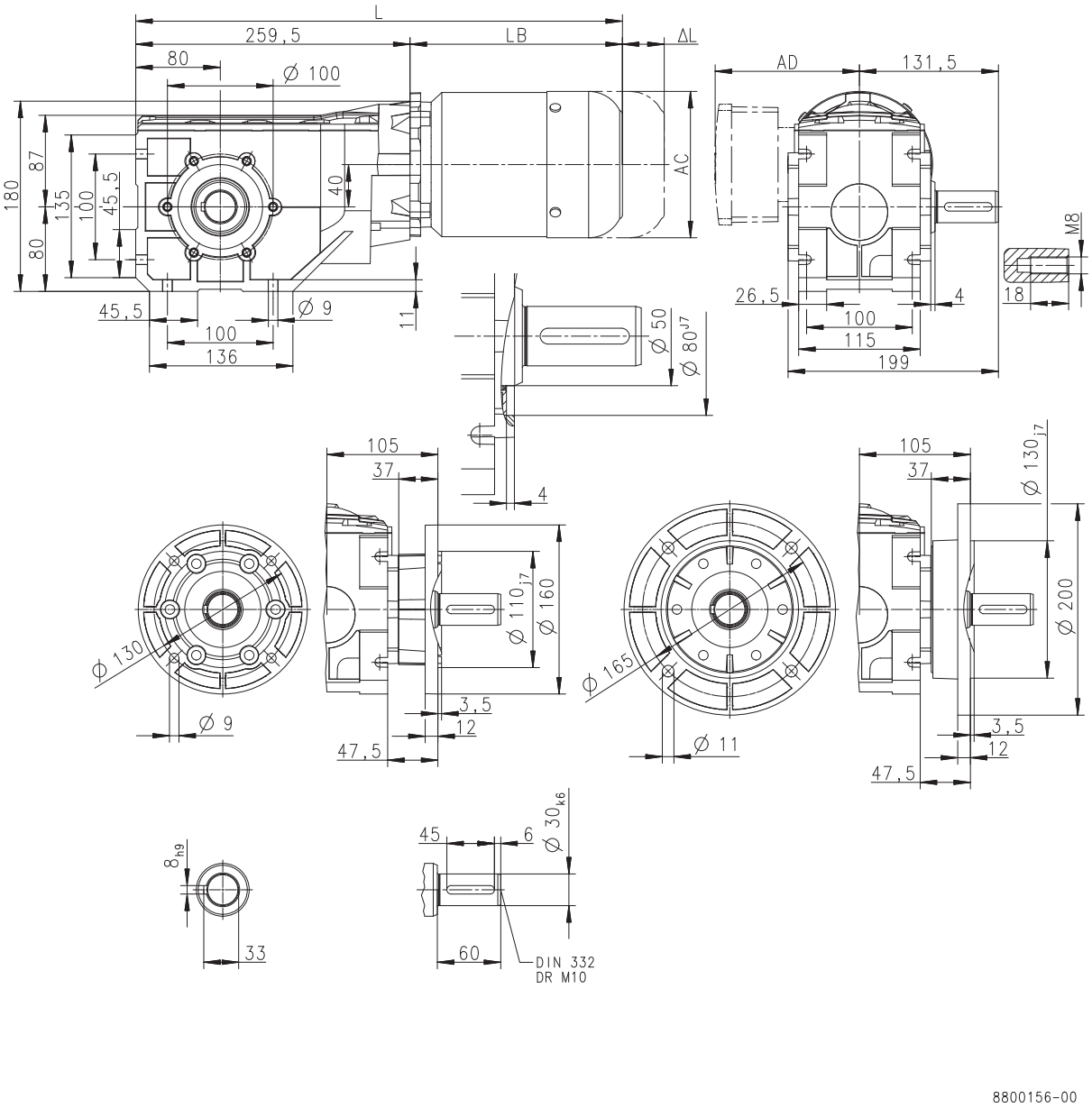

			m550				
			-P80/M4	-P90/M4	-P90/L4	-P100/M4	-P100/L4
Total length	L	[mm]	520	584		644	
Motor length	LB	[mm]	260	324		384	
Length of motor options	Δ L	[mm]	183	175		170	
Motor diameter	AC	[mm]	157	177		195	
Distance motor/connection	AD	[mm]	148	154		164	

L = length of the motor without built-on accessories
ΔL = additional length of the built-on accessories (longest type)

Dimensions, 4-pole motors

g500-B450

Dimensions with hollow shaft
Gearbox design: HBR, HAR, HAK

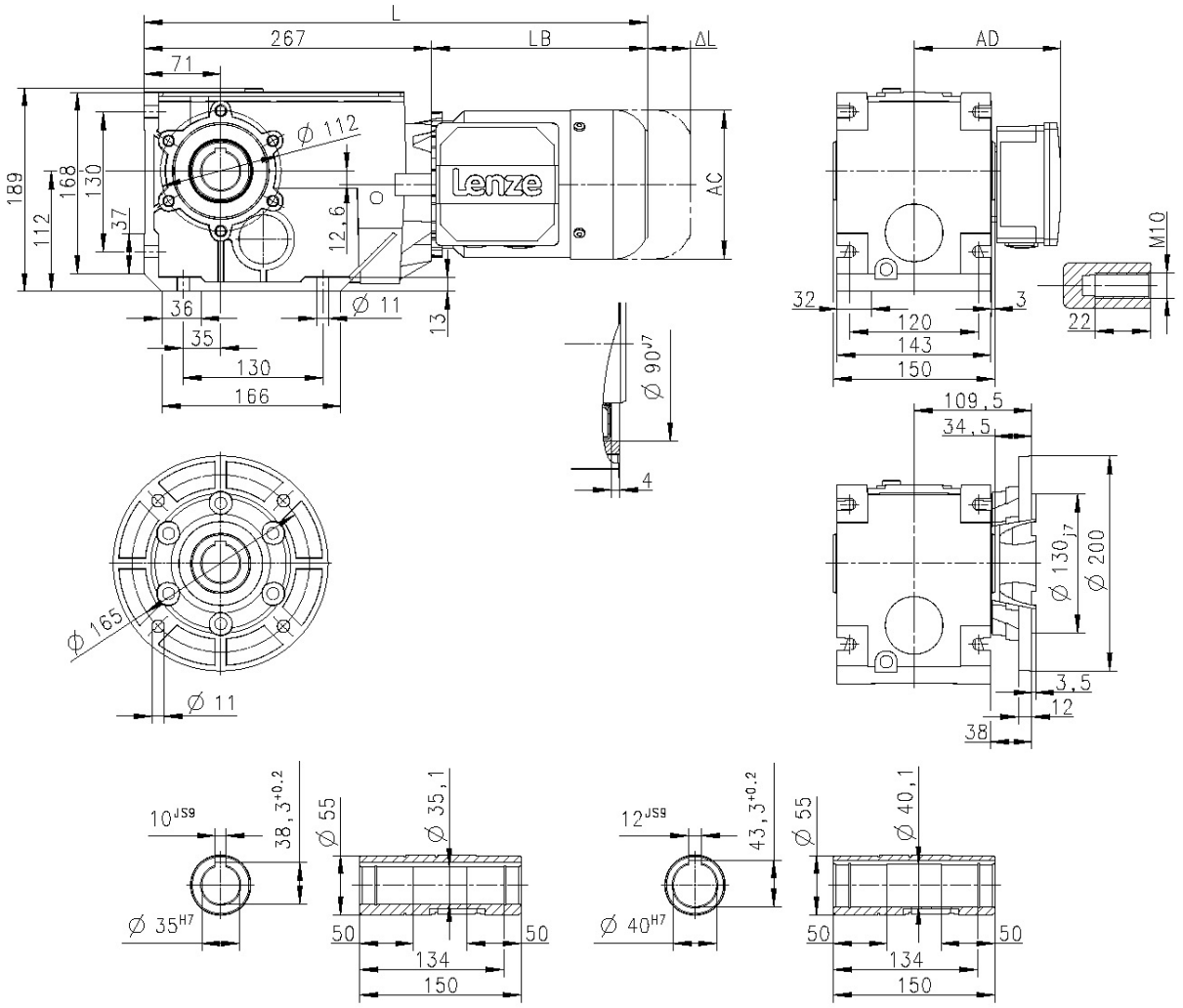

			MD□MA□□				
			063-12	063-32	063-42	071-32	071-42
Total length	L	[mm]	450			470	
Motor length	LB	[mm]	183			203	
Length of motor options	Δ L	[mm]	170			165	
Motor diameter	AC	[mm]	123			139	
Distance motor/connection	AD	[mm]	100			109	

L = length of the motor without built-on accessories
ΔL = additional length of the built-on accessories (longest type)

Dimensions, 4-pole motors

g500-B450

Dimensions with hollow shaft
Gearbox design: HBR, HAR, HAK

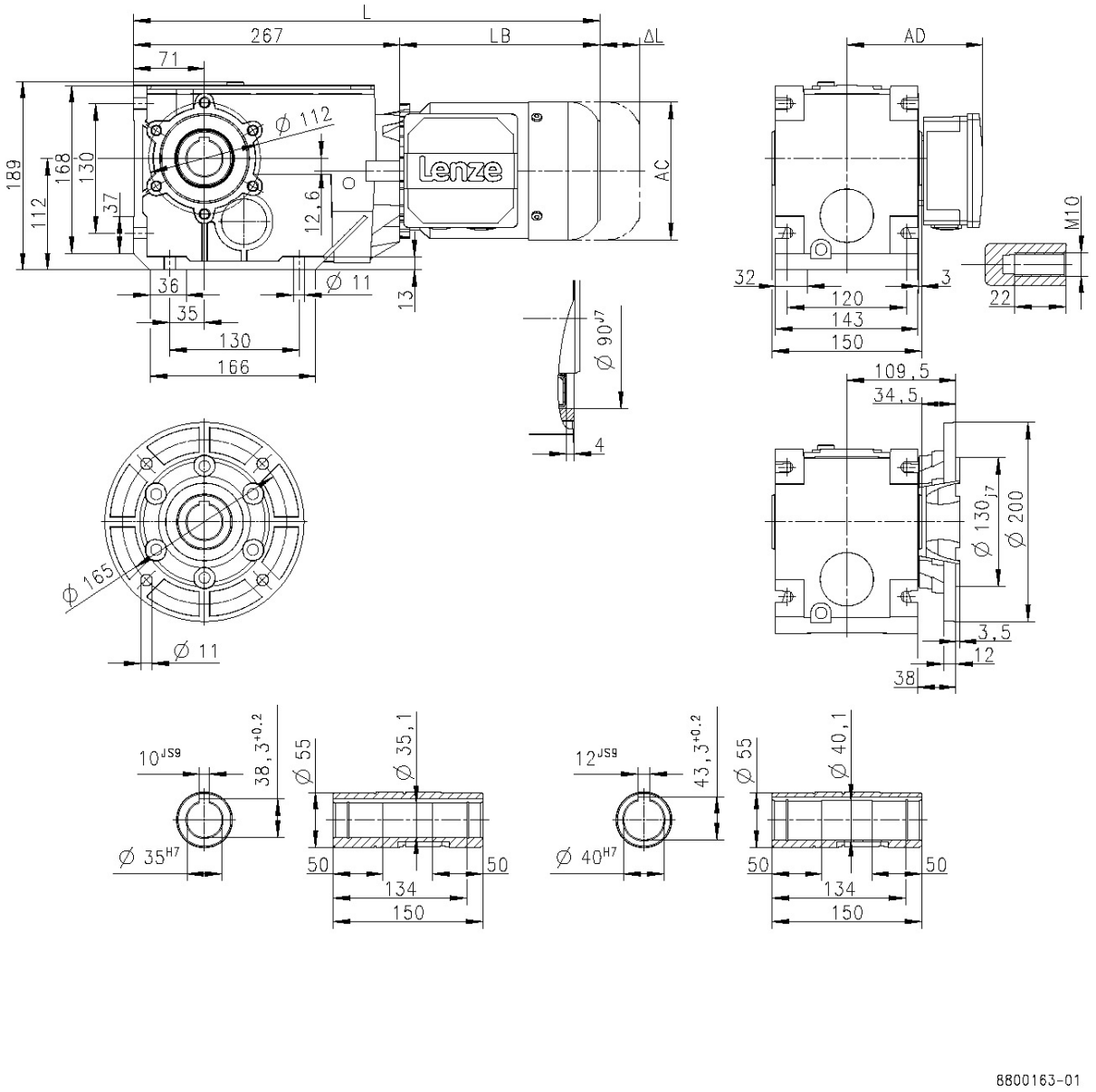

			m550							
			-P80/M4	-P90/M4	-P90/L4	-P100/M4	-P100/L4	-P112/M4	-P132/M4	-P132/L4
Total length	L	[mm]	527	591		651		658	725	
Motor length	LB	[mm]	260	324		384		391	458	
Length of motor options	Δ L	[mm]	183	175		170		183	201	
Motor diameter	AC	[mm]	157	177		195		219	261	
Distance motor/connection	AD	[mm]	148	154		164		171	182	

L = length of the motor without built-on accessories
ΔL = additional length of the built-on accessories (longest type)

Dimensions, 4-pole motors

g500-B450

Dimensions hollow shaft with shrink disc
Gearbox design: SBR, SAR, SAK

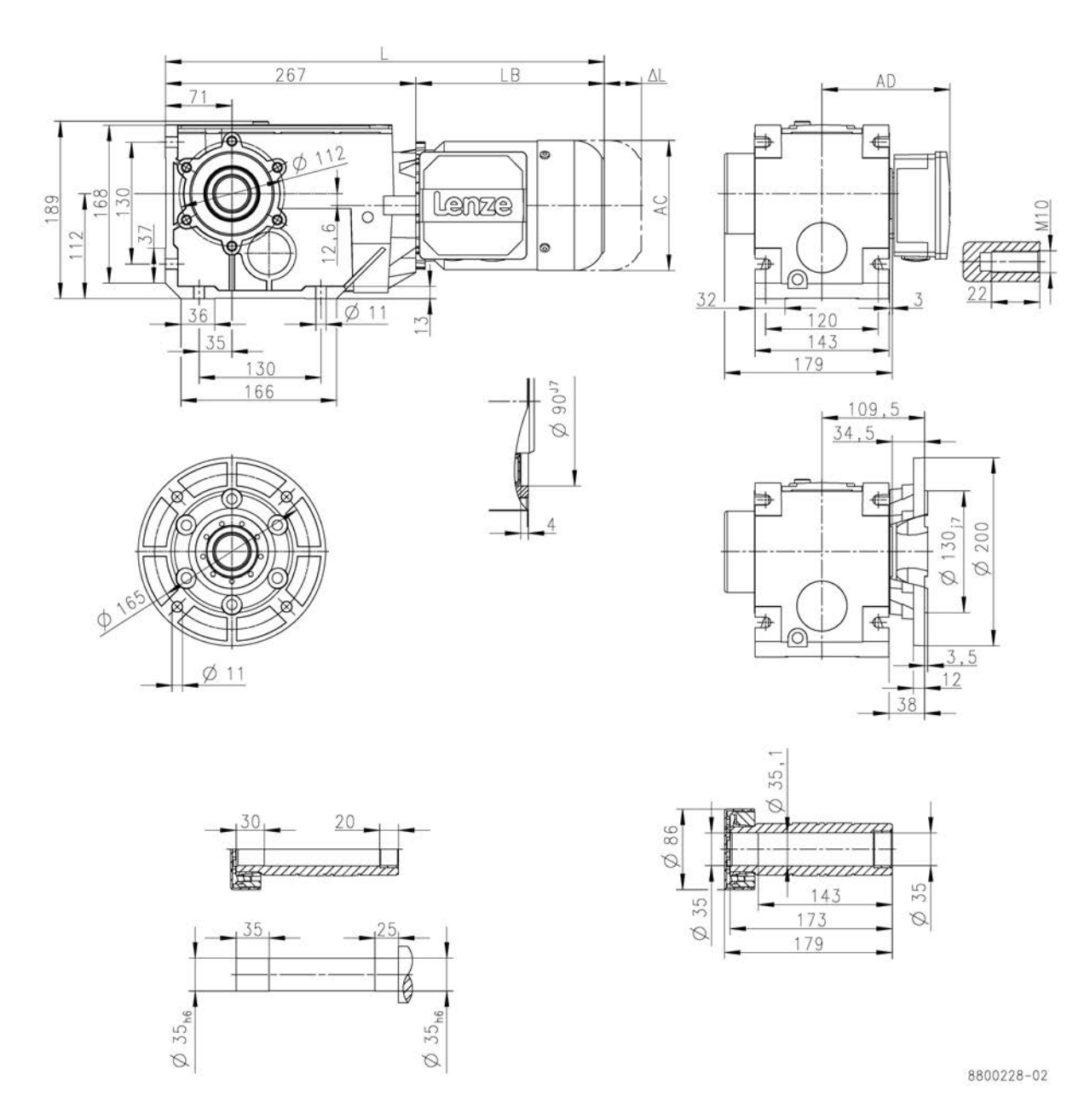

			MD□MA□□				
			063-12	063-32	063-42	071-32	071-42
Total length	L	[mm]	450			470	
Motor length	LB	[mm]	183			203	
Length of motor options	Δ L	[mm]	170			165	
Motor diameter	AC	[mm]	123			139	
Distance motor/connection	AD	[mm]	100			109	

L = length of the motor without built-on accessories
ΔL = additional length of the built-on accessories (longest type)

Dimensions, 4-pole motors

g500-B450

Dimensions hollow shaft with shrink disc
Gearbox design: SBR, SAR, SAK

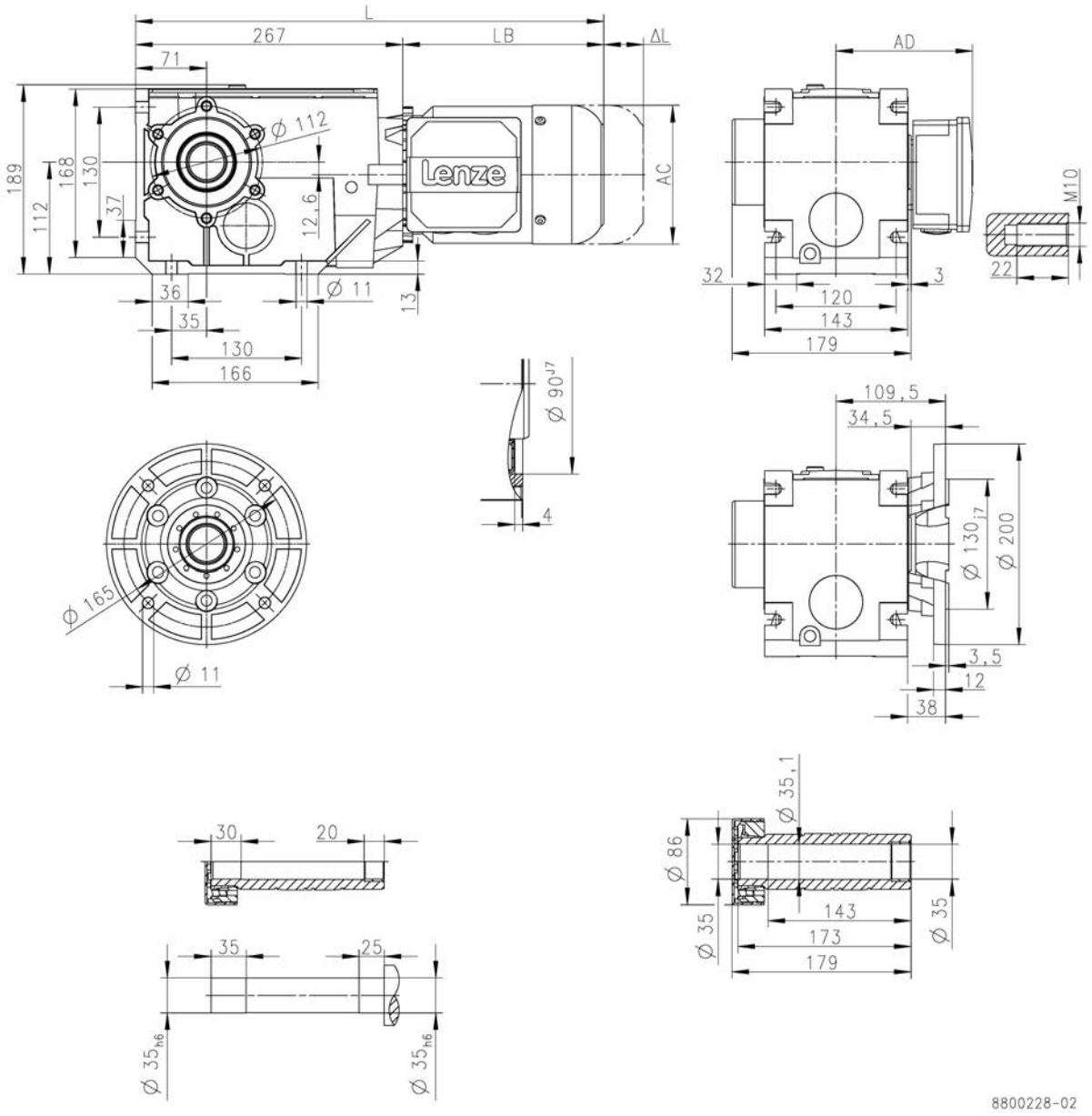

			m550							
			-P80/M4	-P90/M4	-P90/L4	-P100/M4	-P100/L4	-P112/M4	-P132/M4	-P132/L4
Total length	L	[mm]	527	591		651		658	725	
Motor length	LB	[mm]	260	324		384		391	458	
Length of motor options	Δ L	[mm]	183	175		170		183	201	
Motor diameter	AC	[mm]	157	177		195		219	261	
Distance motor/connection	AD	[mm]	148	154		164		171	182	

L = length of the motor without built-on accessories
ΔL = additional length of the built-on accessories (longest type)

Dimensions, 4-pole motors

g500-B450

Dimensions with solid shaft
Gearbox design: VBR, VAR, VAK

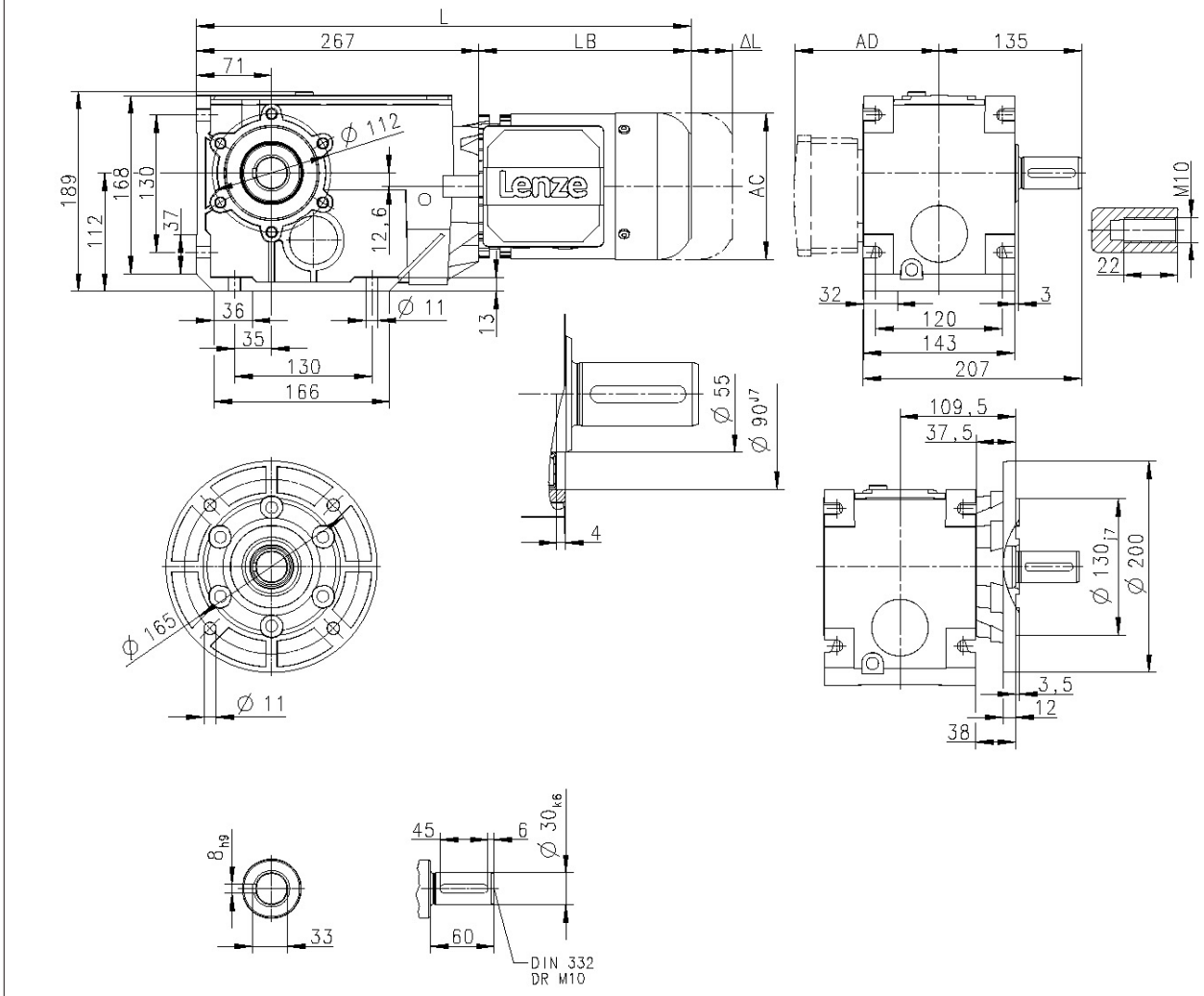

			MD□MA□□				
			063-12	063-32	063-42	071-32	071-42
Total length	L	[mm]	450			470	
Motor length	LB	[mm]	183			203	
Length of motor options	Δ L	[mm]	170			165	
Motor diameter	AC	[mm]	123			139	
Distance motor/connection	AD	[mm]	100			109	

L = length of the motor without built-on accessories
ΔL = additional length of the built-on accessories (longest type)

Dimensions, 4-pole motors

g500-B450

Dimensions with solid shaft
Gearbox design: VBR, VAR, VAK

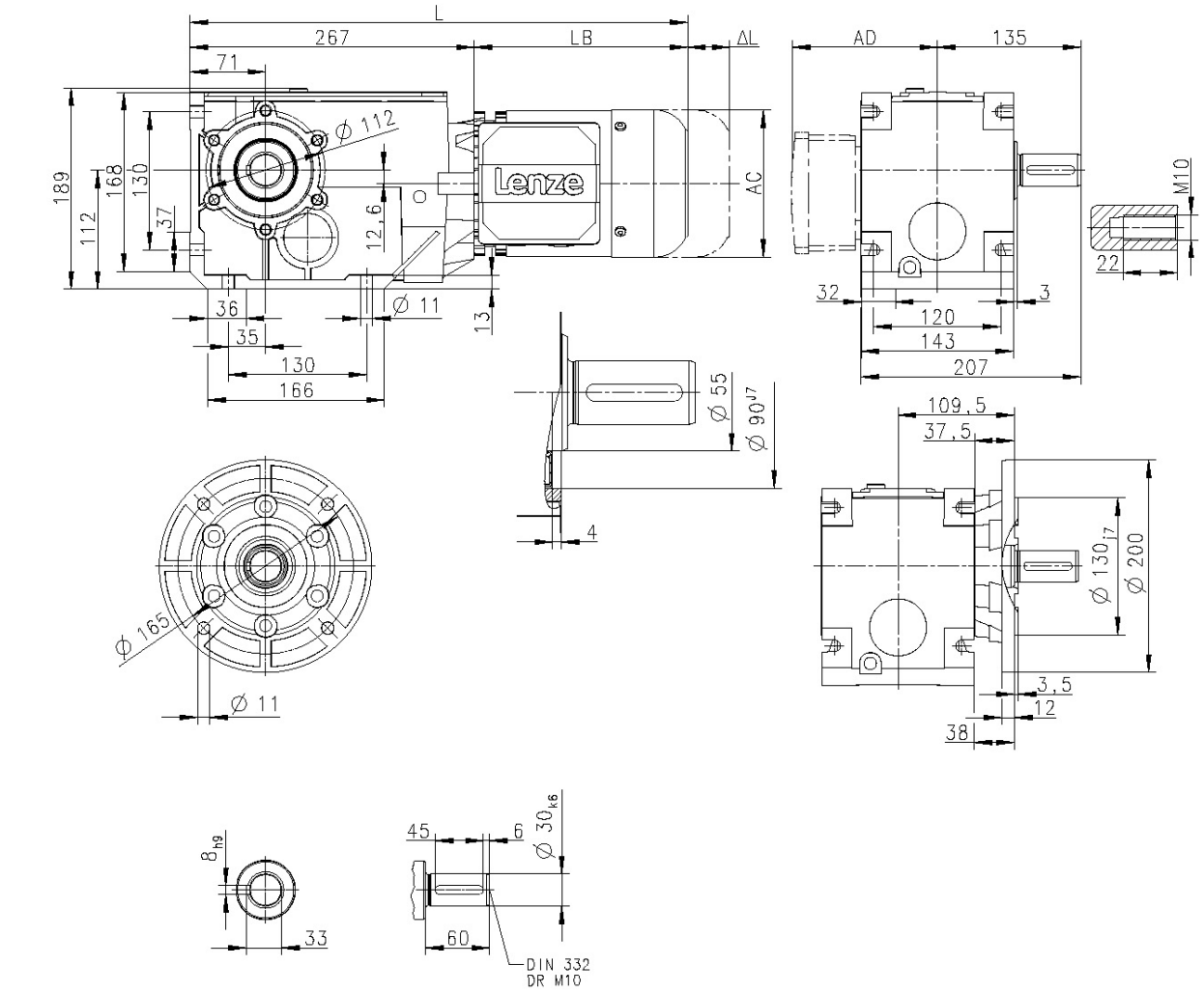

			m550							
			-P80/M4	-P90/M4	-P90/L4	-P100/M4	-P100/L4	-P112/M4	-P132/M4	-P132/L4
Total length	L	[mm]	527	591		651		658	725	
Motor length	LB	[mm]	260	324		384		391	458	
Length of motor options	Δ L	[mm]	183	175		170		183	201	
Motor diameter	AC	[mm]	157	177		195		219	261	
Distance motor/connection	AD	[mm]	148	154		164		171	182	

L = length of the motor without built-on accessories
ΔL = additional length of the built-on accessories (longest type)

Dimensions, 4-pole motors

g500-B600

Dimensions with hollow shaft
Gearbox design: HBR, HAR, HAK

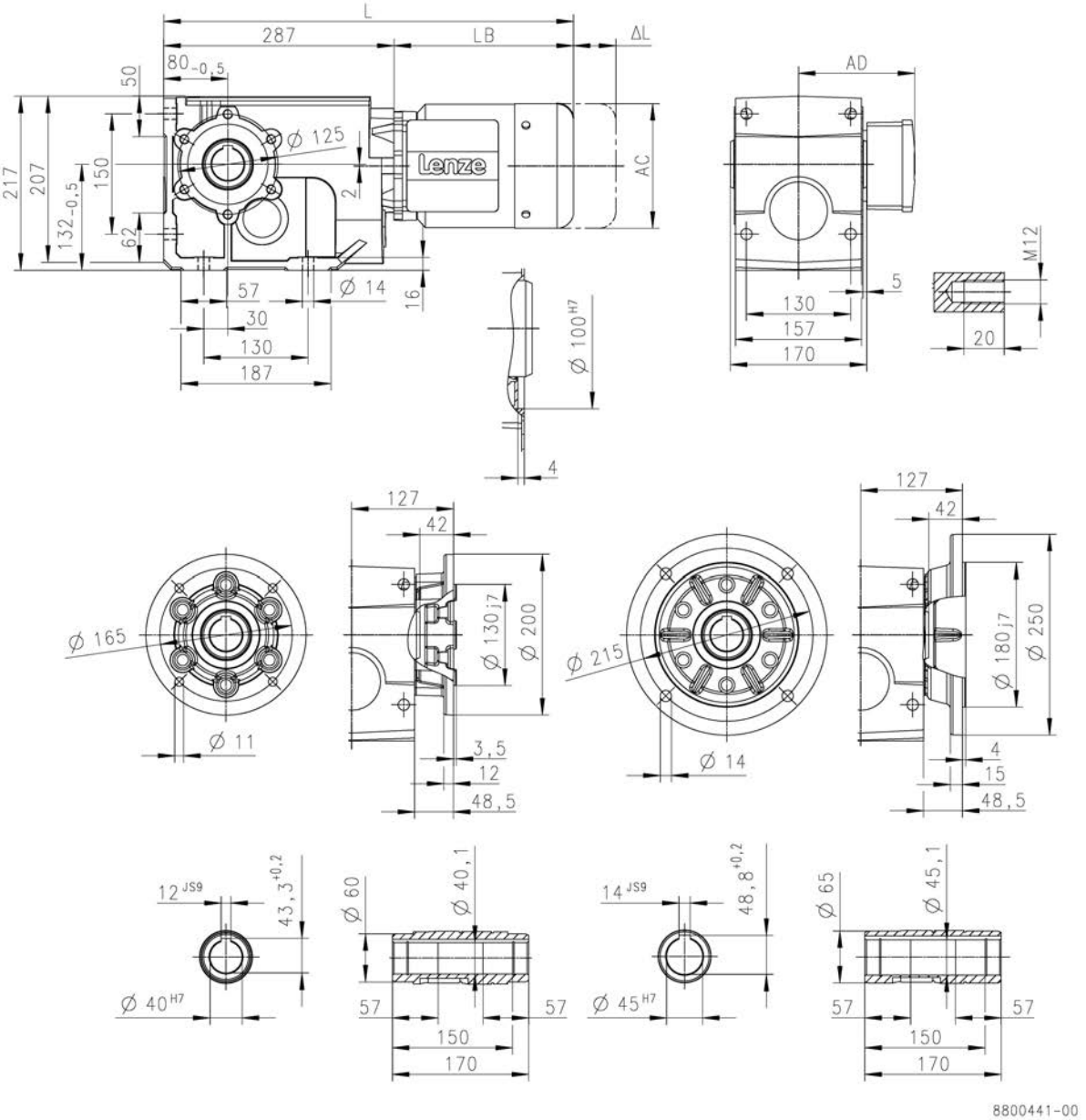

			MD□MA□□		
			063-42	071-32	071-42
Total length	L	[mm]	470	490	
Motor length	LB	[mm]	183	203	
Length of motor options	Δ L	[mm]	170	165	
Motor diameter	AC	[mm]	123	139	
Distance motor/connection	AD	[mm]	100	109	

L = length of the motor without built-on accessories
ΔL = additional length of the built-on accessories (longest type)

Dimensions, 4-pole motors

g500-B600

Dimensions with hollow shaft
Gearbox design: HBR, HAR, HAK

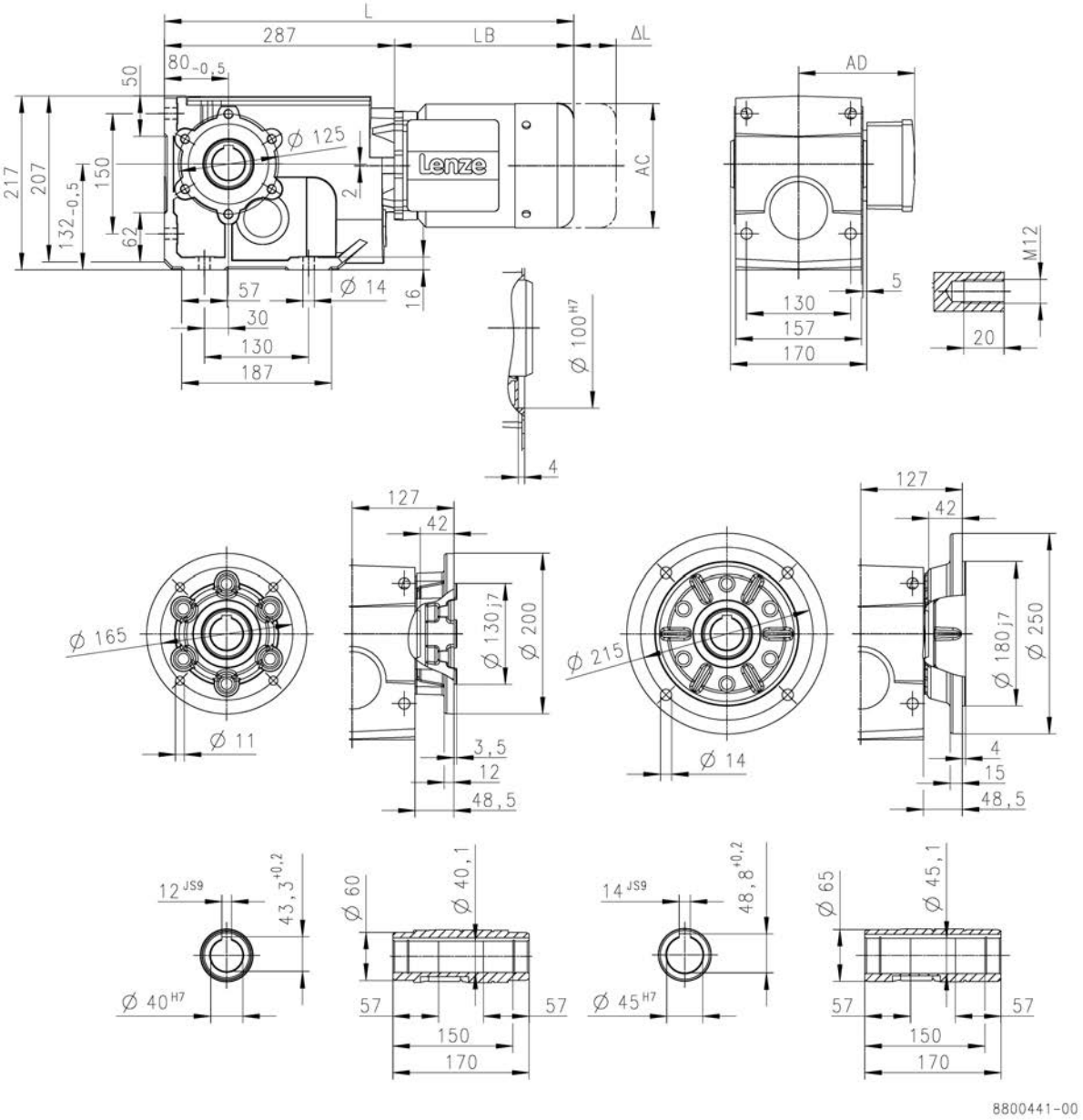

			m550							
			-P80/M4	-P90/M4	-P90/L4	-P100/M4	-P100/L4	-P112/M4	-P132/M4	-P132/L4
Total length	L	[mm]	547	611		671		678	745	
Motor length	LB	[mm]	260	324		384		391	458	
Length of motor options	Δ L	[mm]	183	175		170		183	201	
Motor diameter	AC	[mm]	157	177		195		219	261	
Distance motor/connection	AD	[mm]	148	154		164		171	182	

L = length of the motor without built-on accessories
ΔL = additional length of the built-on accessories (longest type)

Dimensions, 4-pole motors

g500-B600

Dimensions hollow shaft with shrink disc
Gearbox design: SBR, SAR, SAK

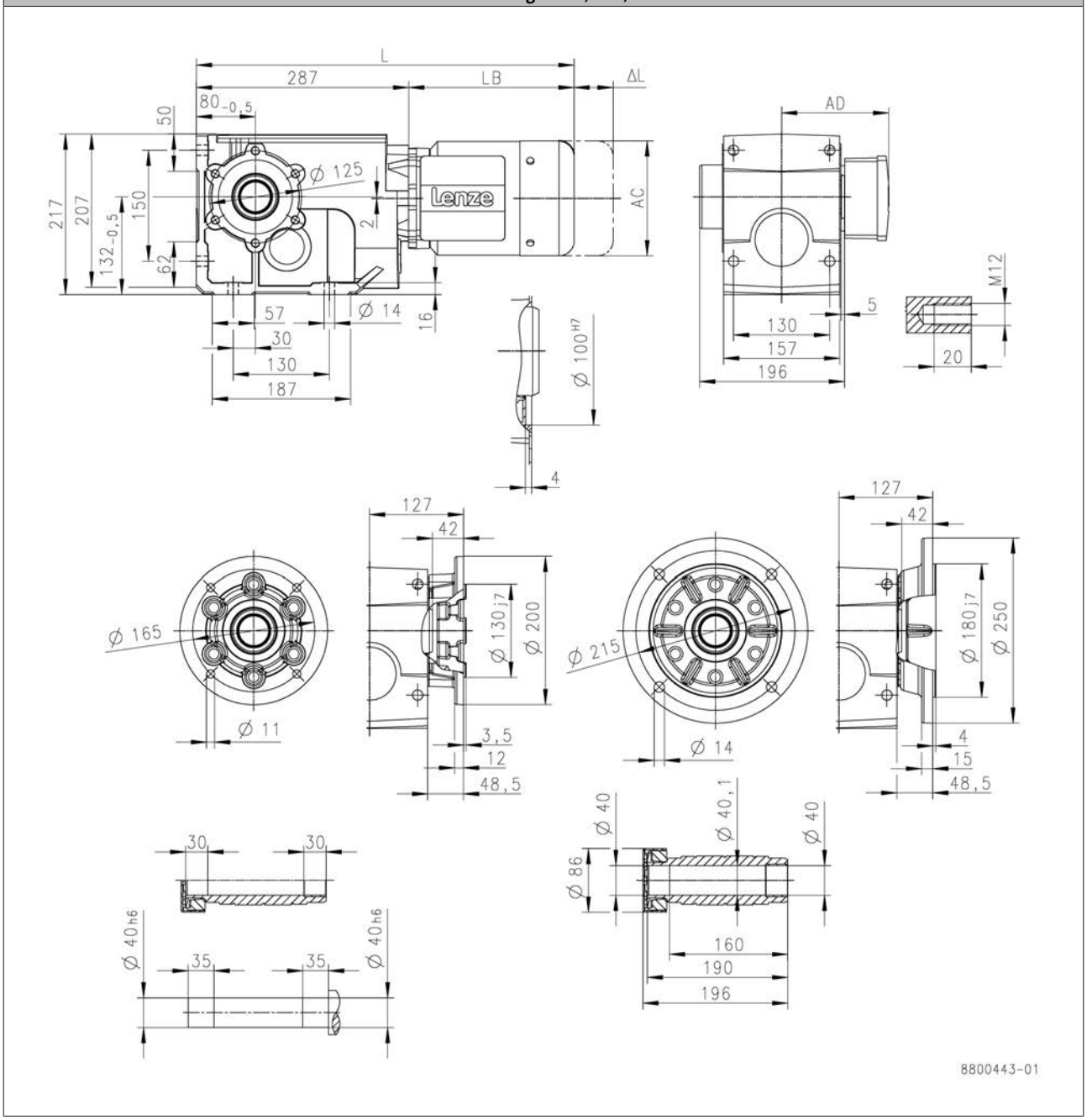

			MD□MA□□		
			063-42	071-32	071-42
Total length	L	[mm]	470	490	
Motor length	LB	[mm]	183	203	
Length of motor options	Δ L	[mm]	170	165	
Motor diameter	AC	[mm]	123	139	
Distance motor/connection	AD	[mm]	100	109	

L = length of the motor without built-on accessories
ΔL = additional length of the built-on accessories (longest type)

Dimensions, 4-pole motors

g500-B600

Dimensions hollow shaft with shrink disc
Gearbox design: SBR, SAR, SAK

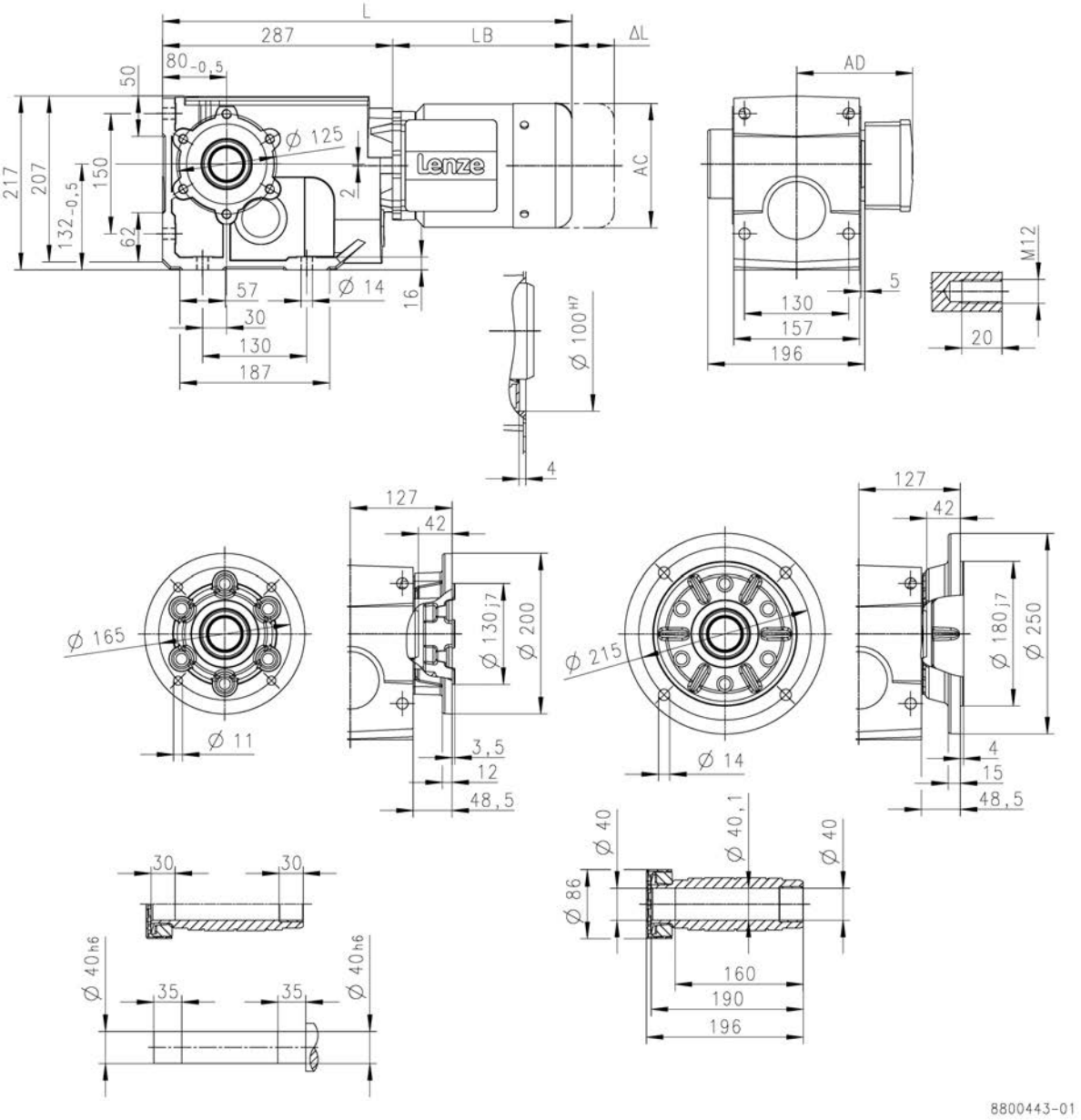

			m550							
			-P80/M4	-P90/M4	-P90/L4	-P100/M4	-P100/L4	-P112/M4	-P132/M4	-P132/L4
Total length	L	[mm]	547	611		671		678	745	
Motor length	LB	[mm]	260	324		384		391	458	
Length of motor options	Δ L	[mm]	183	175		170		183	201	
Motor diameter	AC	[mm]	157	177		195		219	261	
Distance motor/connection	AD	[mm]	148	154		164		171	182	

L = length of the motor without built-on accessories
ΔL = additional length of the built-on accessories (longest type)

Dimensions, 4-pole motors

g500-B600

Dimensions with solid shaft
Gearbox design: VBR, VAR, VAK

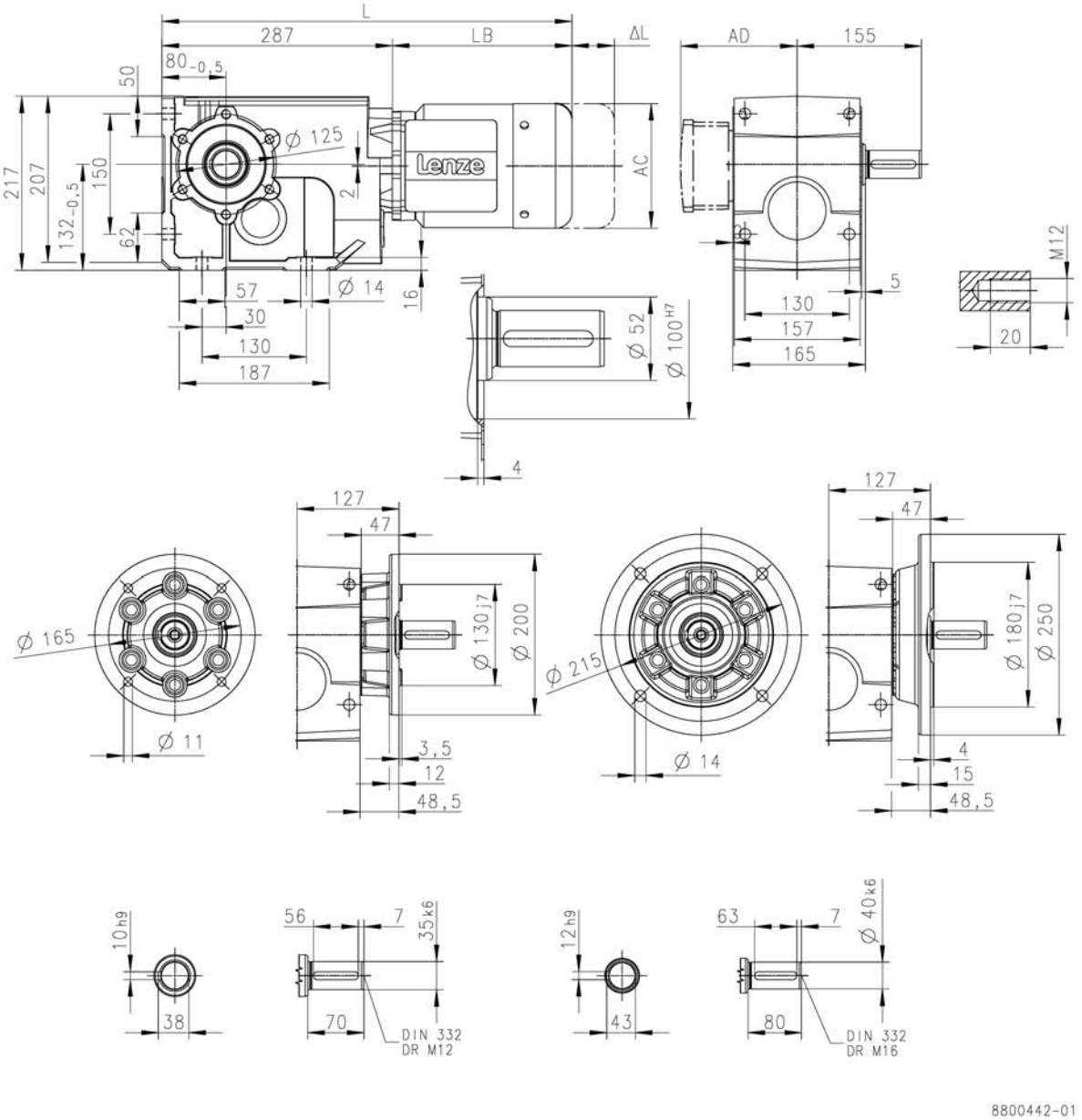

			MD□MA□□		
			063-42	071-32	071-42
Total length	L	[mm]	470	490	
Motor length	LB	[mm]	183	203	
Length of motor options	Δ L	[mm]	170	165	
Motor diameter	AC	[mm]	123	139	
Distance motor/connection	AD	[mm]	100	109	

L = length of the motor without built-on accessories
ΔL = additional length of the built-on accessories (longest type)

Dimensions, 4-pole motors

g500-B600

Dimensions with solid shaft
Gearbox design: VBR, VAR, VAK

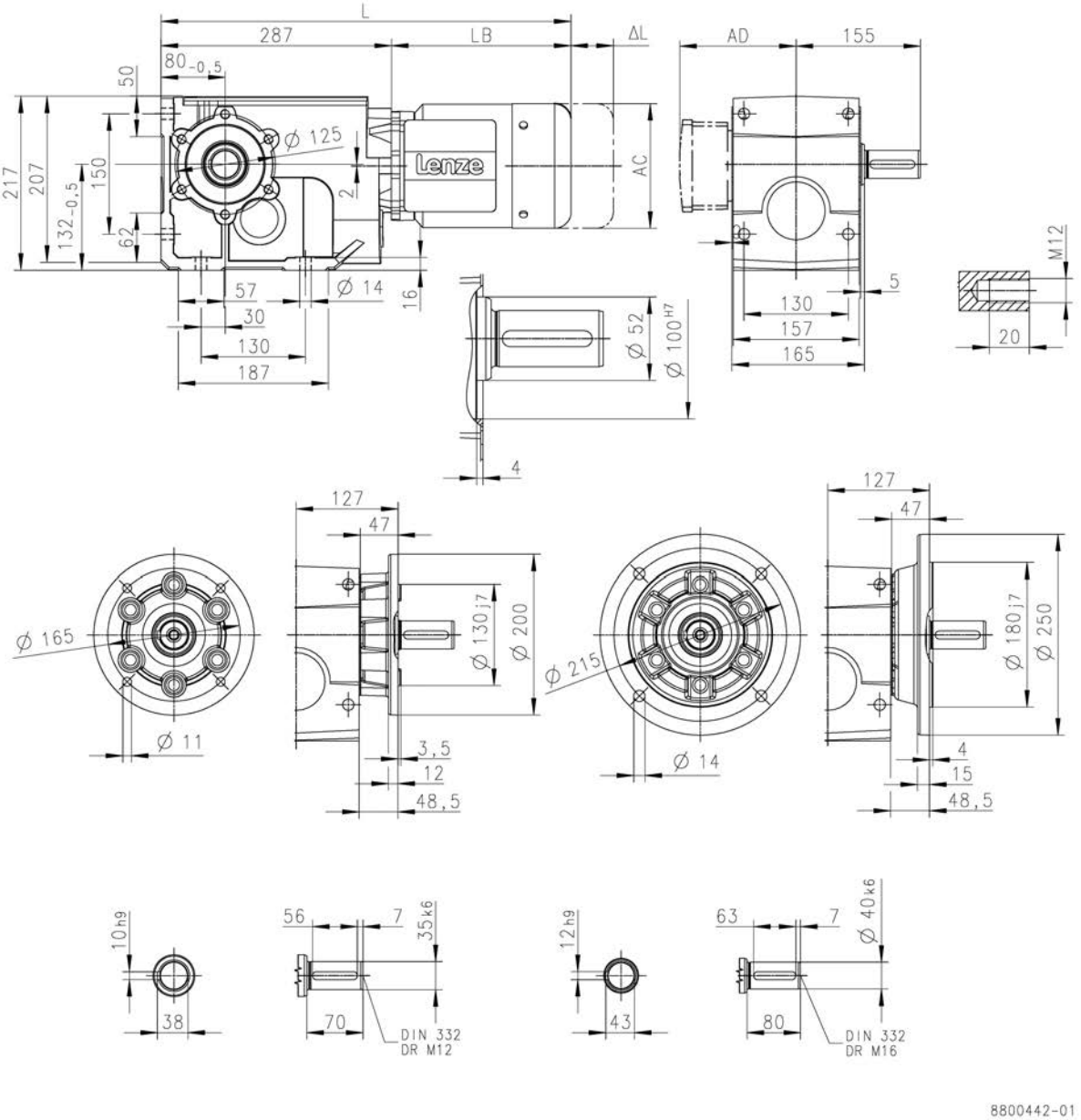

			m550							
			-P80/M4	-P90/M4	-P90/L4	-P100/M4	-P100/L4	-P112/M4	-P132/M4	-P132/L4
Total length	L	[mm]	547	611		671		678	745	
Motor length	LB	[mm]	260	324		384		391	458	
Length of motor options	Δ L	[mm]	183	175		170		183	201	
Motor diameter	AC	[mm]	157	177		195		219	261	
Distance motor/connection	AD	[mm]	148	154		164		171	182	

L = length of the motor without built-on accessories
ΔL = additional length of the built-on accessories (longest type)

Dimensions, 4-pole motors

g500-B820

Dimensions with hollow shaft
Gearbox design: HBR, HAR, HAK

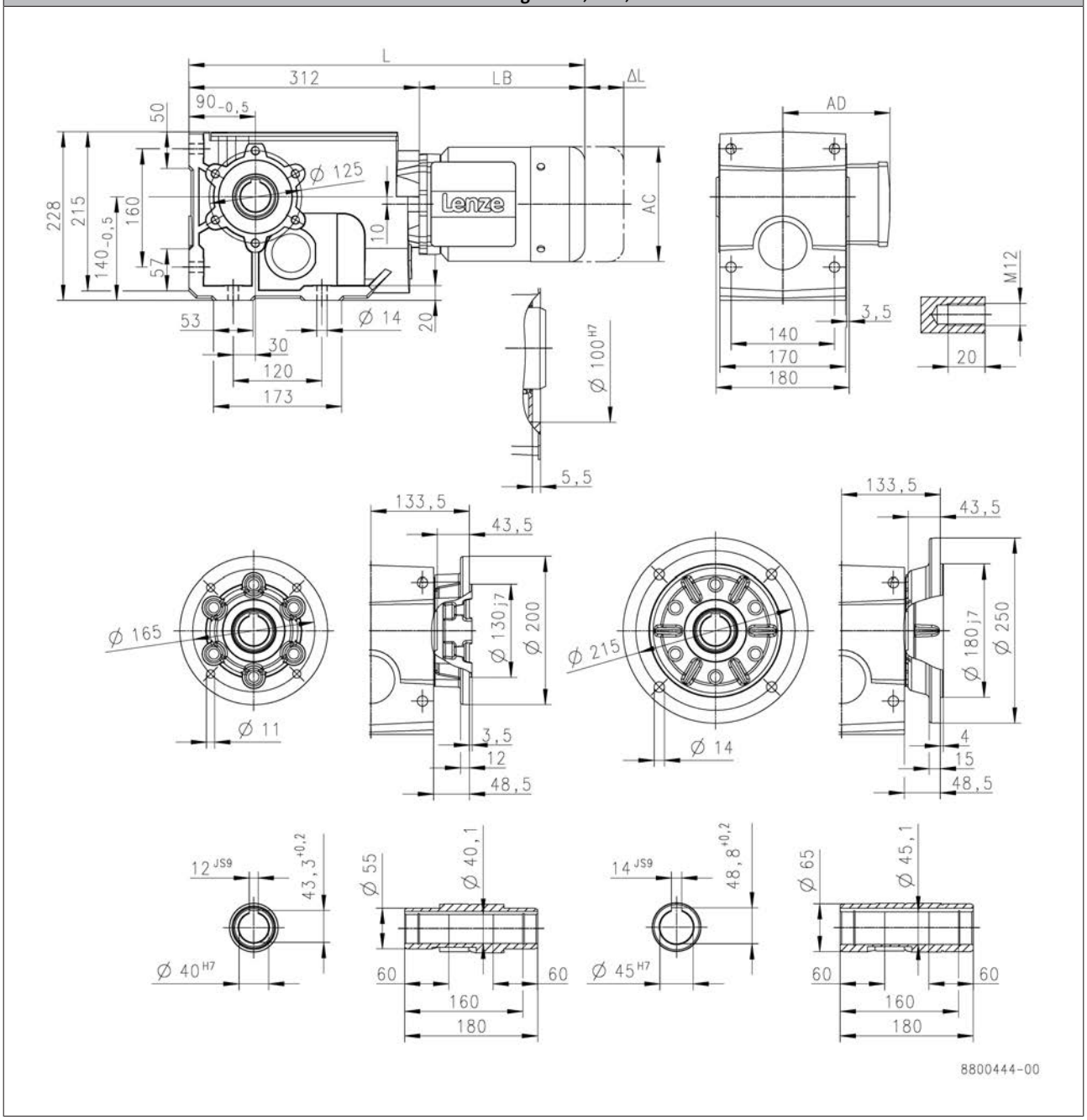

			MD□MA□□		
			063-42	071-32	071-42
Total length	L	[mm]	495	515	
Motor length	LB	[mm]	183	203	
Length of motor options	Δ L	[mm]	170	165	
Motor diameter	AC	[mm]	123	139	
Distance motor/connection	AD	[mm]	100	109	

L = length of the motor without built-on accessories
ΔL = additional length of the built-on accessories (longest type)

Dimensions, 4-pole motors

g500-B820

Dimensions with hollow shaft
Gearbox design: HBR, HAR, HAK

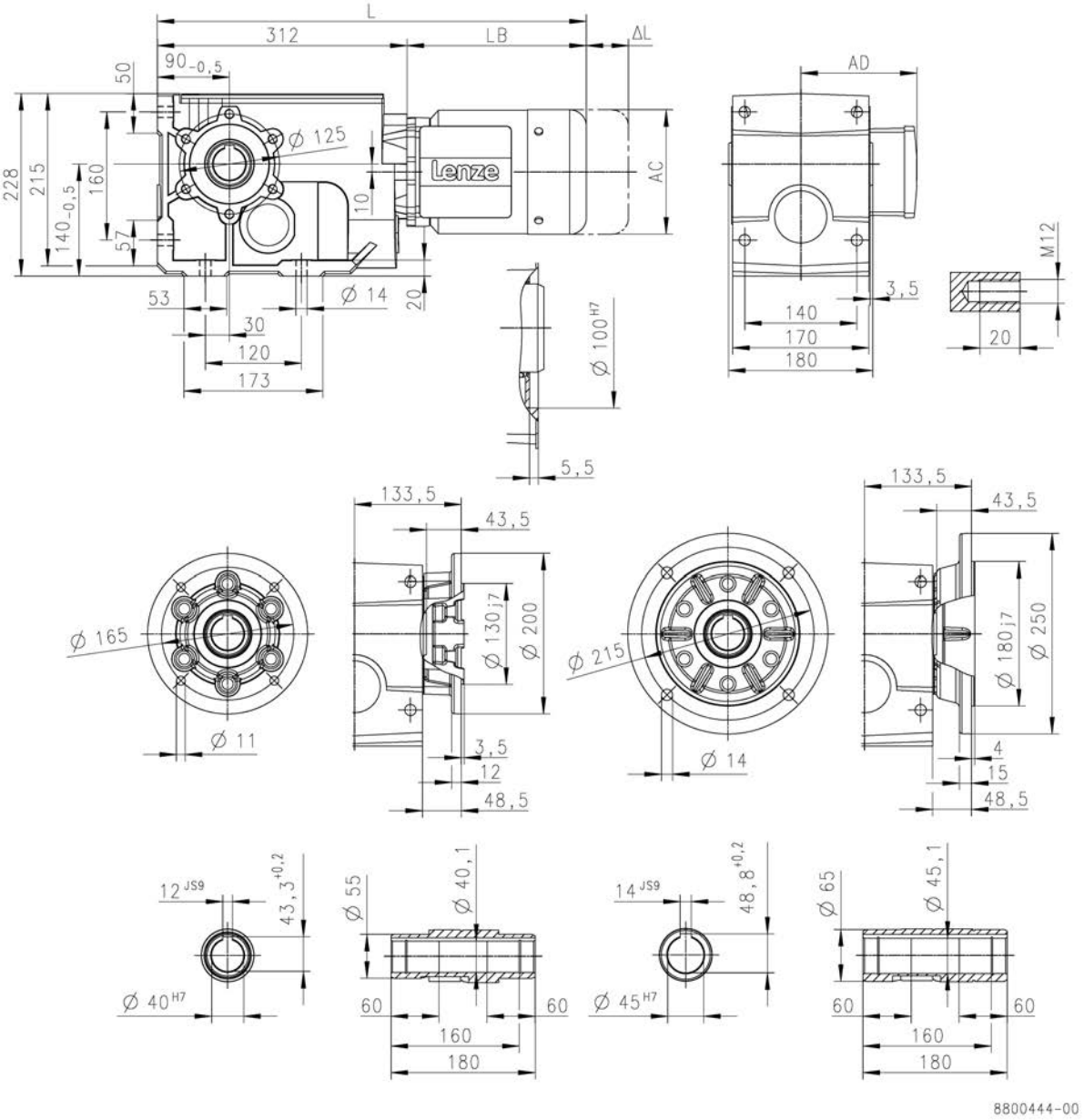

			m550							
			-P80/M4	-P90/M4	-P90/L4	-P100/M4	-P100/L4	-P112/M4	-P132/M4	-P132/L4
Total length	L	[mm]	572	636		696		703	770	
Motor length	LB	[mm]	260	324		384		391	458	
Length of motor options	Δ L	[mm]	183	175		170		183	201	
Motor diameter	AC	[mm]	157	177		195		219	261	
Distance motor/connection	AD	[mm]	148	154		164		171	182	

L = length of the motor without built-on accessories
ΔL = additional length of the built-on accessories (longest type)

Dimensions, 4-pole motors

g500-B820

Dimensions hollow shaft with shrink disc
Gearbox design: SBR, SAR, SAK

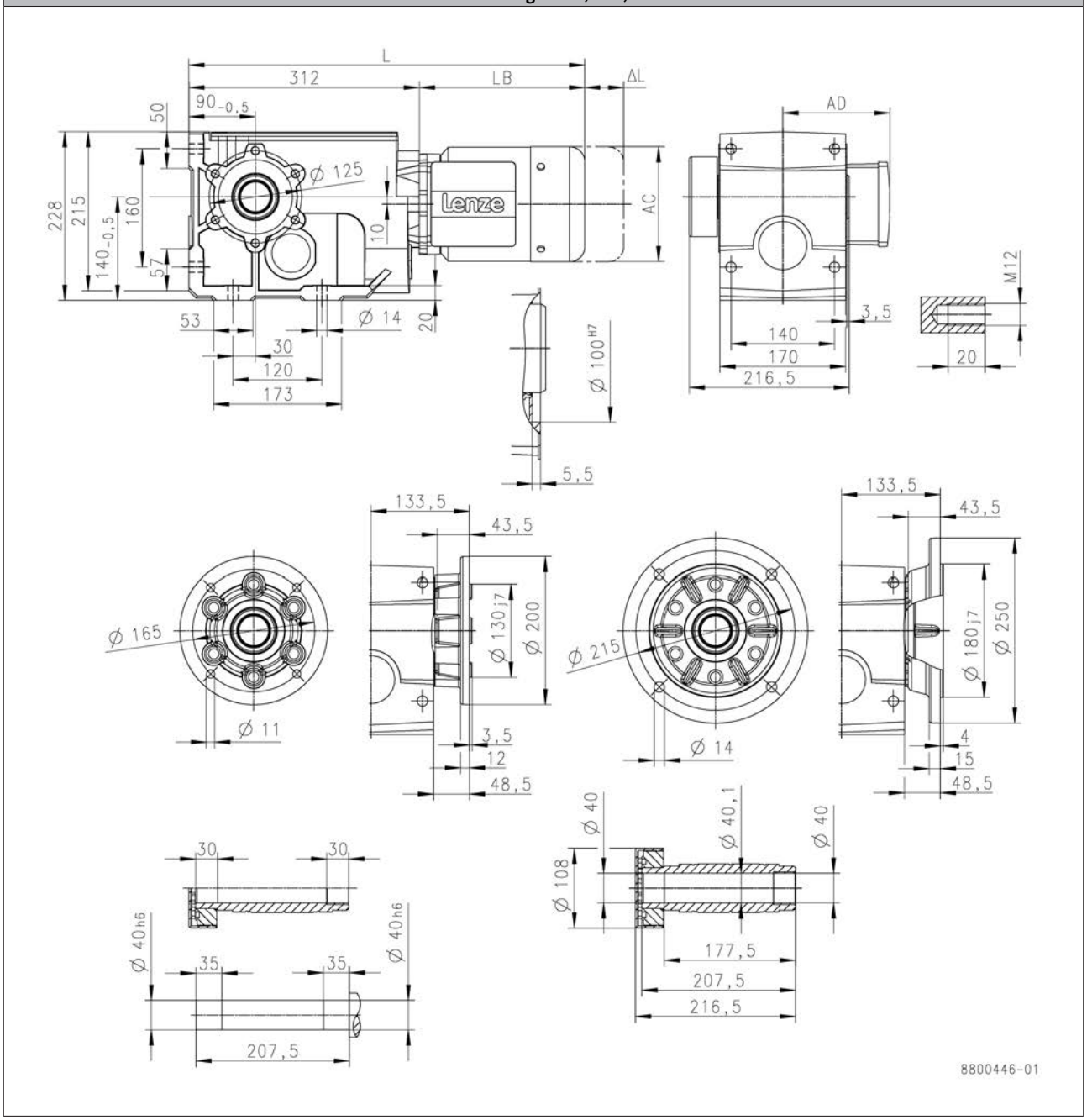

			MD□MA□□		
			063-42	071-32	071-42
Total length	L	[mm]	495	515	
Motor length	LB	[mm]	183	203	
Length of motor options	Δ L	[mm]	170	165	
Motor diameter	AC	[mm]	123	139	
Distance motor/connection	AD	[mm]	100	109	

L = length of the motor without built-on accessories
ΔL = additional length of the built-on accessories (longest type)

Dimensions, 4-pole motors

g500-B820

Dimensions hollow shaft with shrink disc
Gearbox design: SBR, SAR, SAK

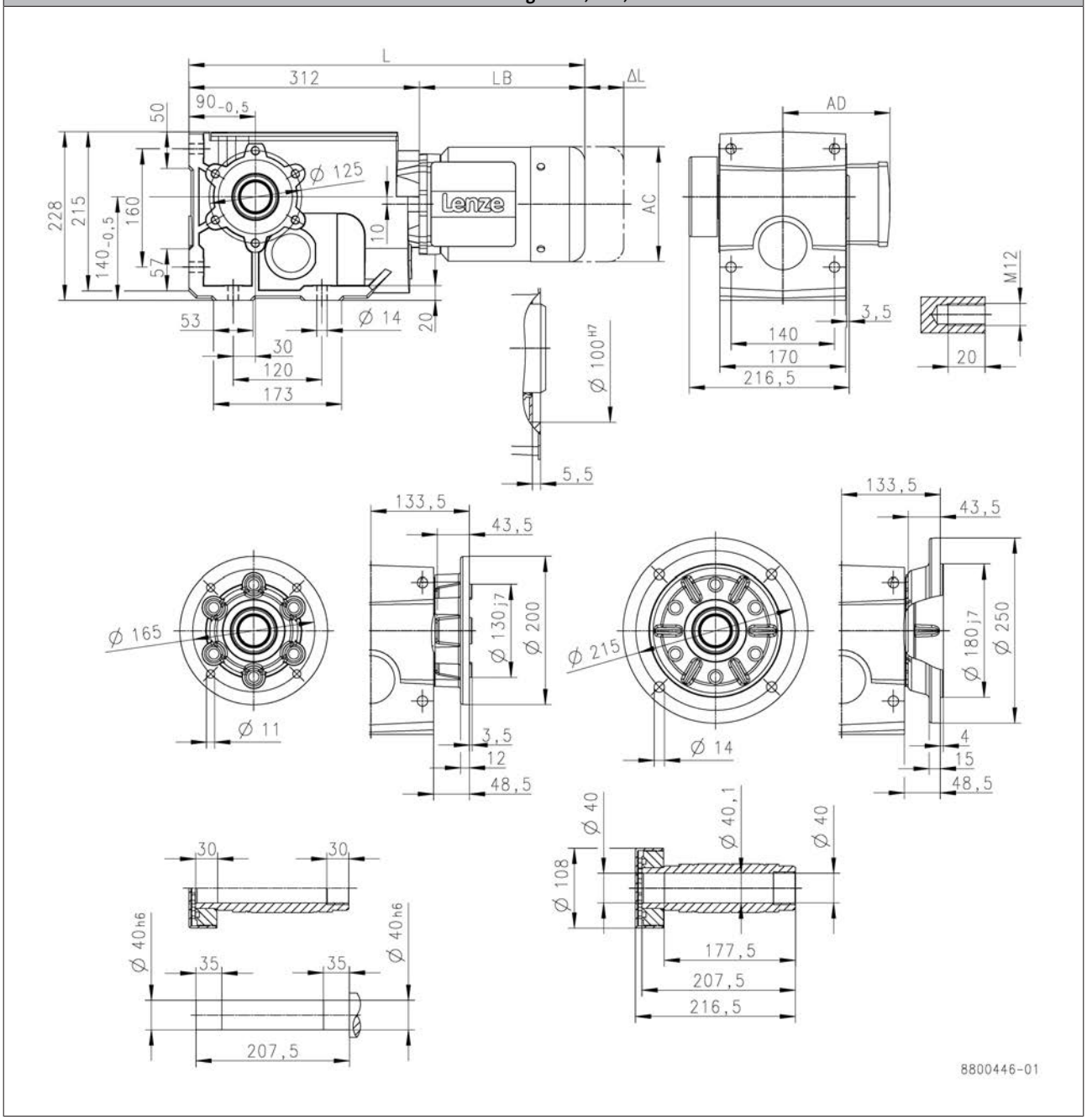

			m550							
			-P80/M4	-P90/M4	-P90/L4	-P100/M4	-P100/L4	-P112/M4	-P132/M4	-P132/L4
Total length	L	[mm]	572	636		696		703	770	
Motor length	LB	[mm]	260	324		384		391	458	
Length of motor options	Δ L	[mm]	183	175		170		183	201	
Motor diameter	AC	[mm]	157	177		195		219	261	
Distance motor/connection	AD	[mm]	148	154		164		171	182	

L = length of the motor without built-on accessories
ΔL = additional length of the built-on accessories (longest type)

Dimensions, 4-pole motors

g500-B820

Dimensions with solid shaft
Gearbox design: VBR, VAR, VAK

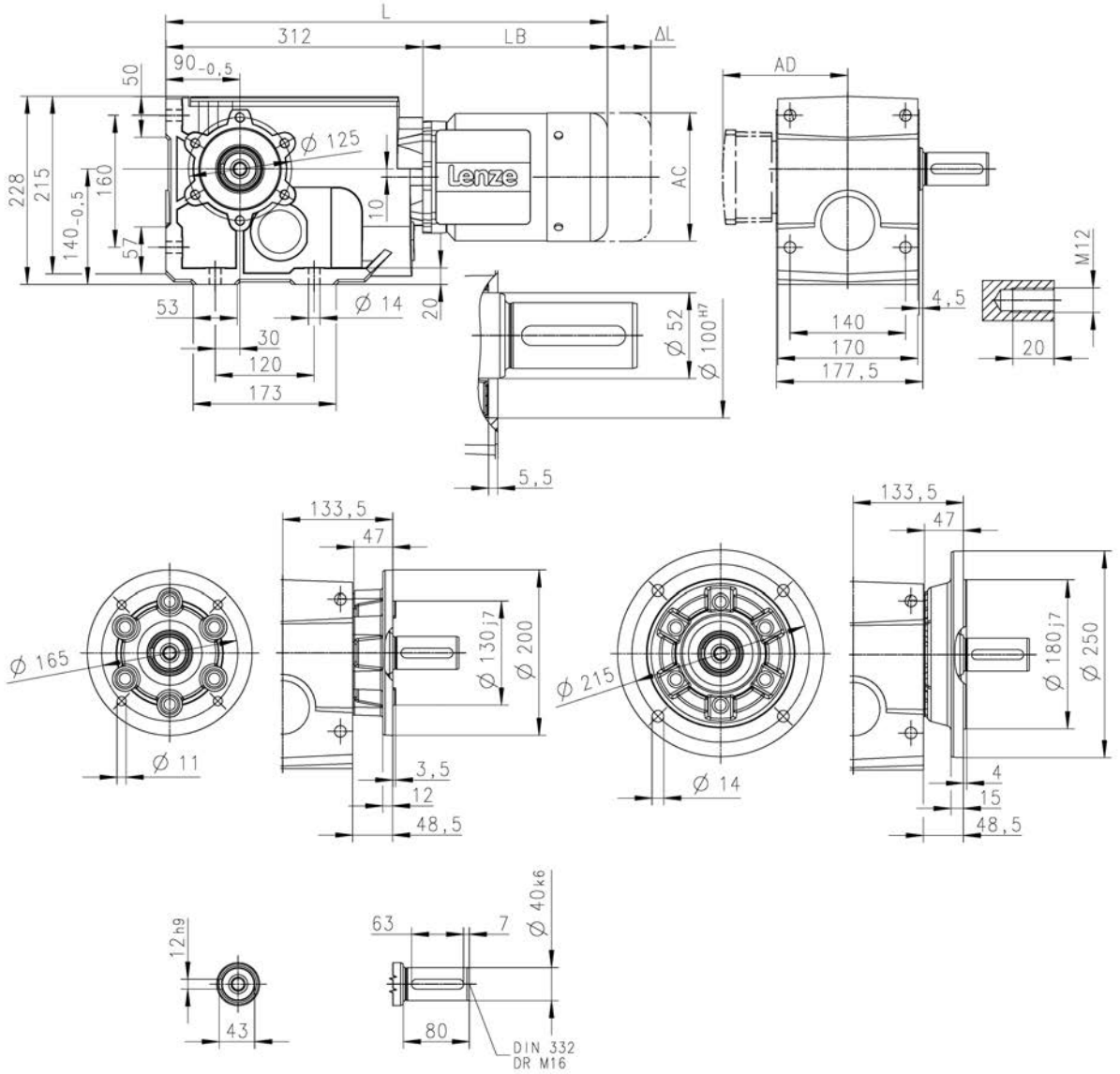

			MD□MA□□		
			063-42	071-32	071-42
Total length	L	[mm]	495	515	
Motor length	LB	[mm]	183	203	
Length of motor options	Δ L	[mm]	170	165	
Motor diameter	AC	[mm]	123	139	
Distance motor/connection	AD	[mm]	100	109	

L = length of the motor without built-on accessories
ΔL = additional length of the built-on accessories (longest type)

Dimensions, 4-pole motors

g500-B820

Dimensions with solid shaft
Gearbox design: VBR, VAR, VAK

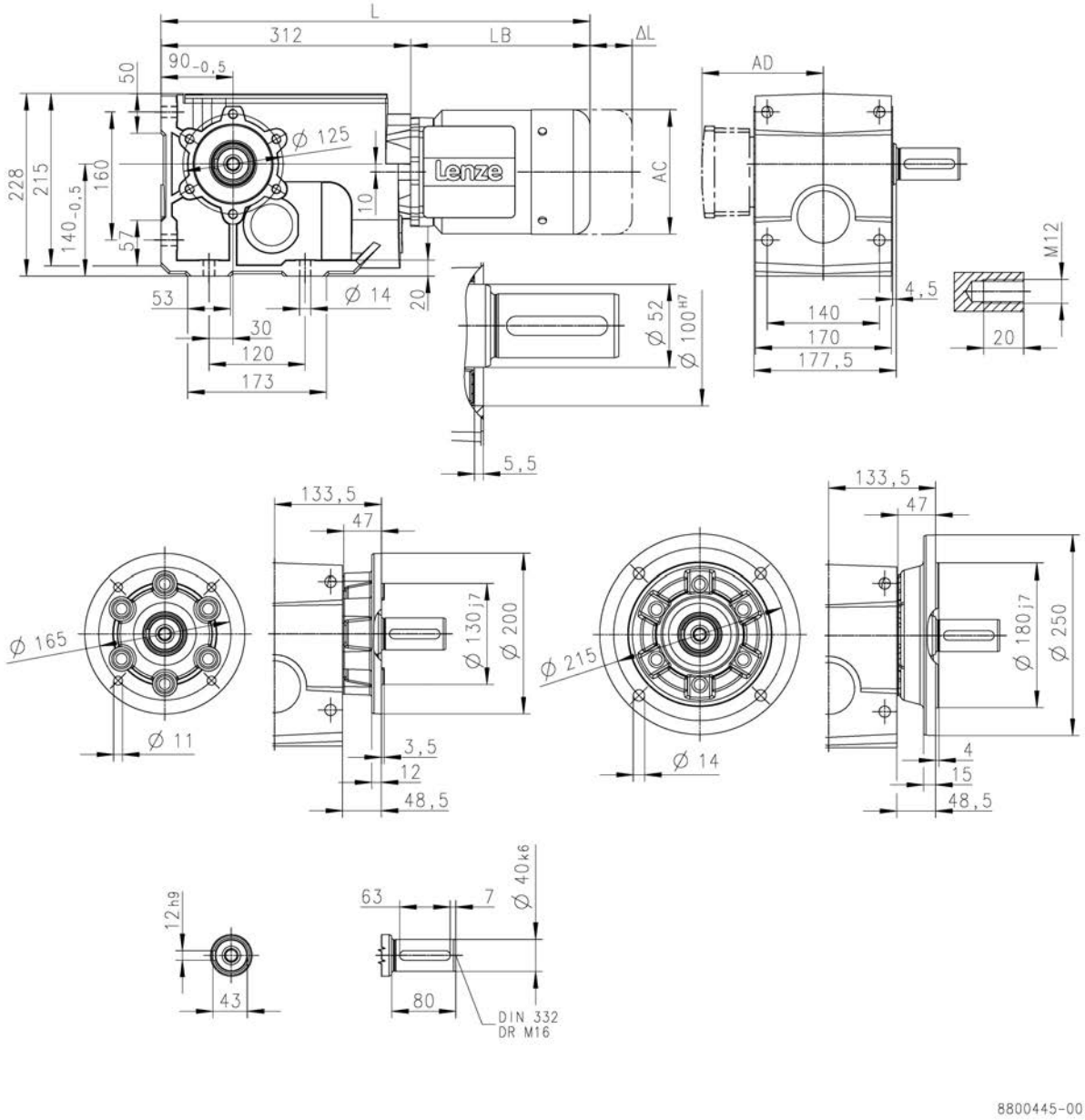

			m550							
			-P80/M4	-P90/M4	-P90/L4	-P100/M4	-P100/L4	-P112/M4	-P132/M4	-P132/L4
Total length	L	[mm]	572	636		696		703	770	
Motor length	LB	[mm]	260	324		384		391	458	
Length of motor options	Δ L	[mm]	183	175		170		183	201	
Motor diameter	AC	[mm]	157	177		195		219	261	
Distance motor/connection	AD	[mm]	148	154		164		171	182	

L = length of the motor without built-on accessories
ΔL = additional length of the built-on accessories (longest type)

Dimensions, 4-pole motors

g500-B1500

Dimensions with hollow shaft
Gearbox design: HBR, HAR, HAK

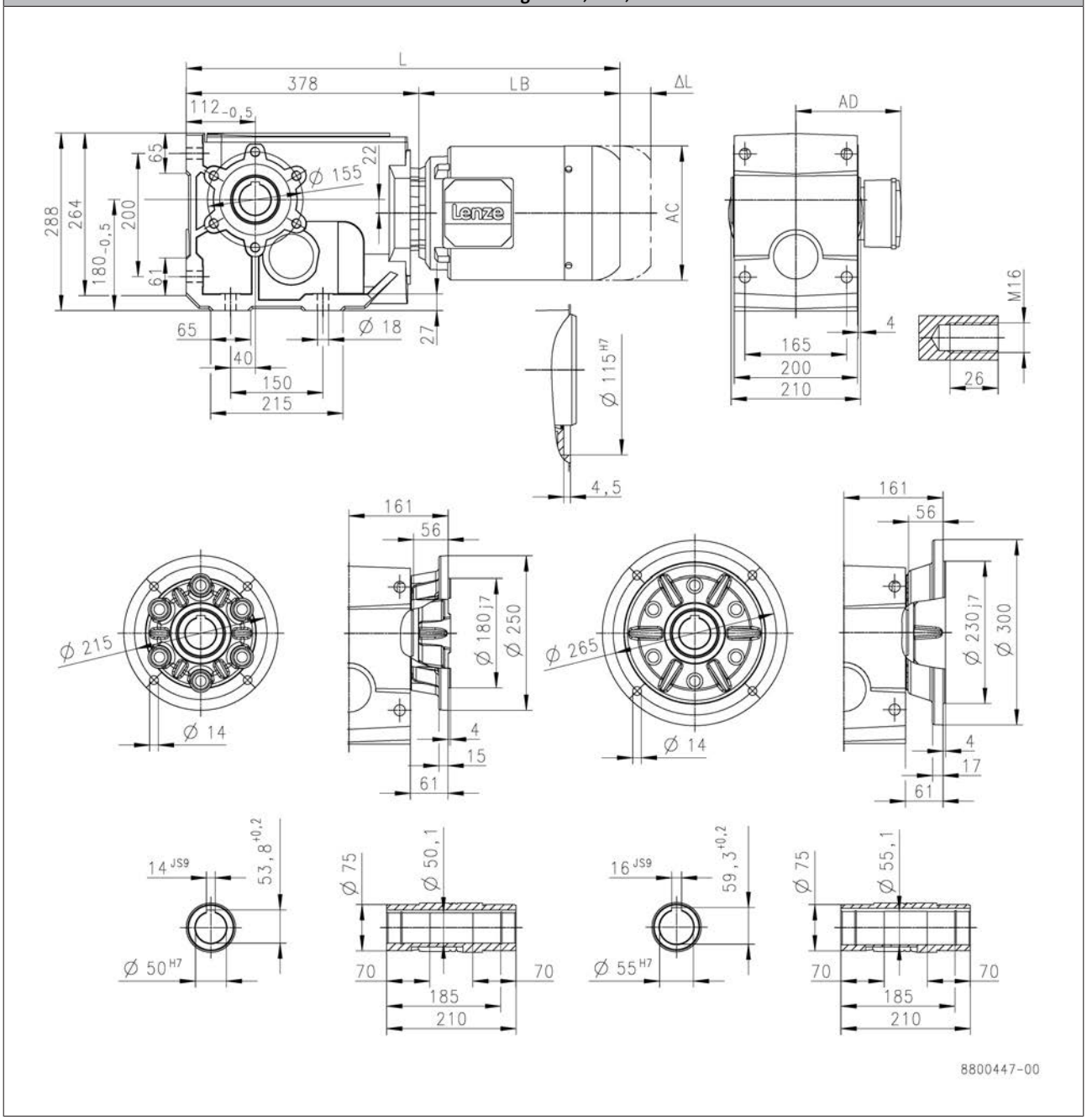

			MD□MA□□	m550				
			071-42	-P80/M4	-P90/M4	-P90/L4	-P100/M4	-P100/L4
Total length	L	[mm]	581	638	702		762	
Motor length	LB	[mm]	203	260	324		384	
Length of motor options	Δ L	[mm]	165	183	175		170	
Motor diameter	AC	[mm]	139	157	177		195	
Distance motor/connection	AD	[mm]	109	148	154		164	

L = length of the motor without built-on accessories
ΔL = additional length of the built-on accessories (longest type)

Dimensions, 4-pole motors

g500-B1500

Dimensions with hollow shaft
Gearbox design: HBR, HAR, HAK

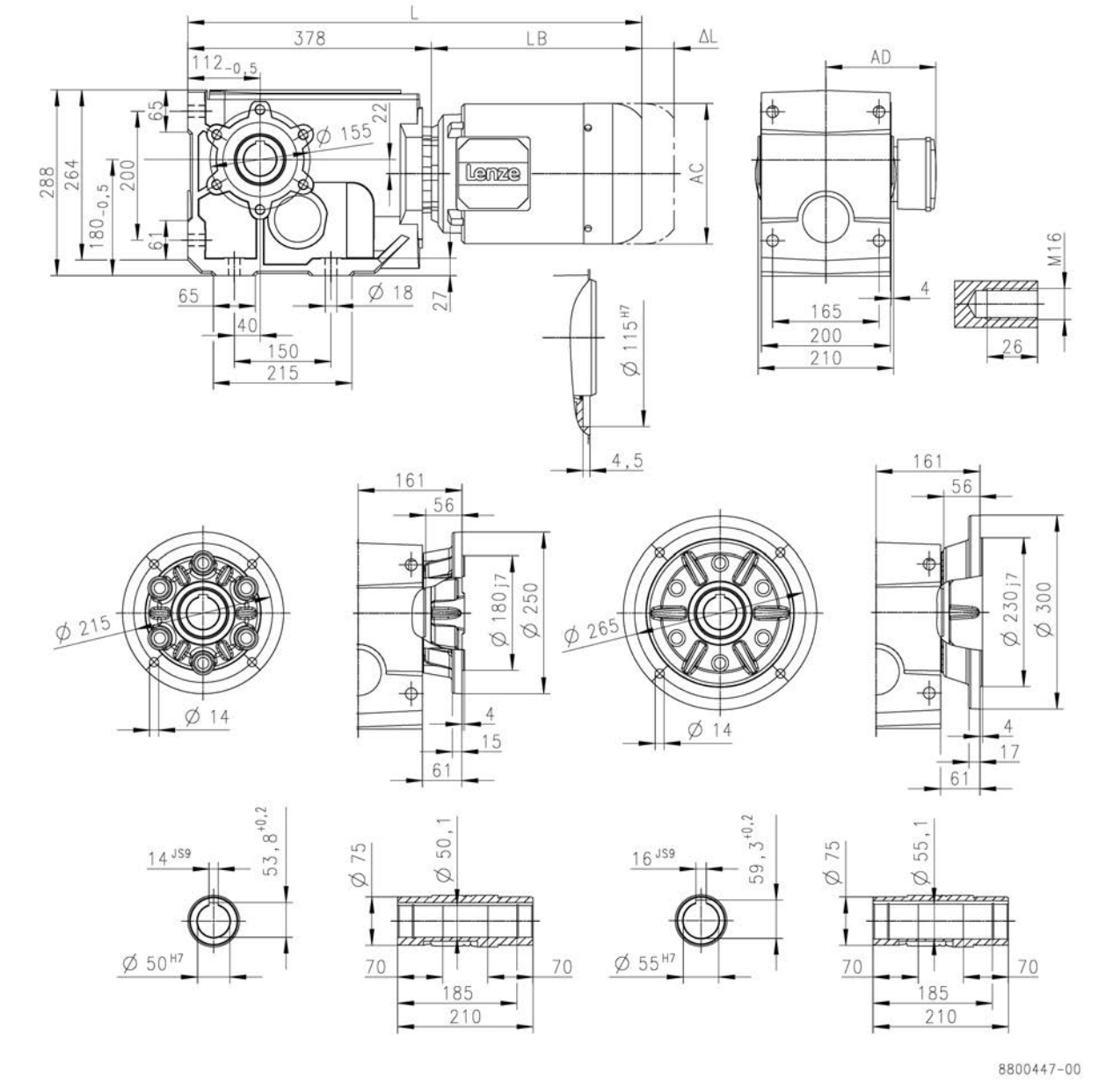

			m550				
			-P112/M4	-P132/M4	-P132/L4	-P160/M4	-P160/L4
Total length	L	[mm]	769	836		947	
Motor length	LB	[mm]	391	458		569	
Length of motor options	Δ L	[mm]	183	201		237	
Motor diameter	AC	[mm]	219	261		313	
Distance motor/connection	AD	[mm]	171	182		231	

L = length of the motor without built-on accessories
ΔL = additional length of the built-on accessories (longest type)

Dimensions, 4-pole motors

g500-B1500

Dimensions hollow shaft with shrink disc
Gearbox design: SBR, SAR, SAK

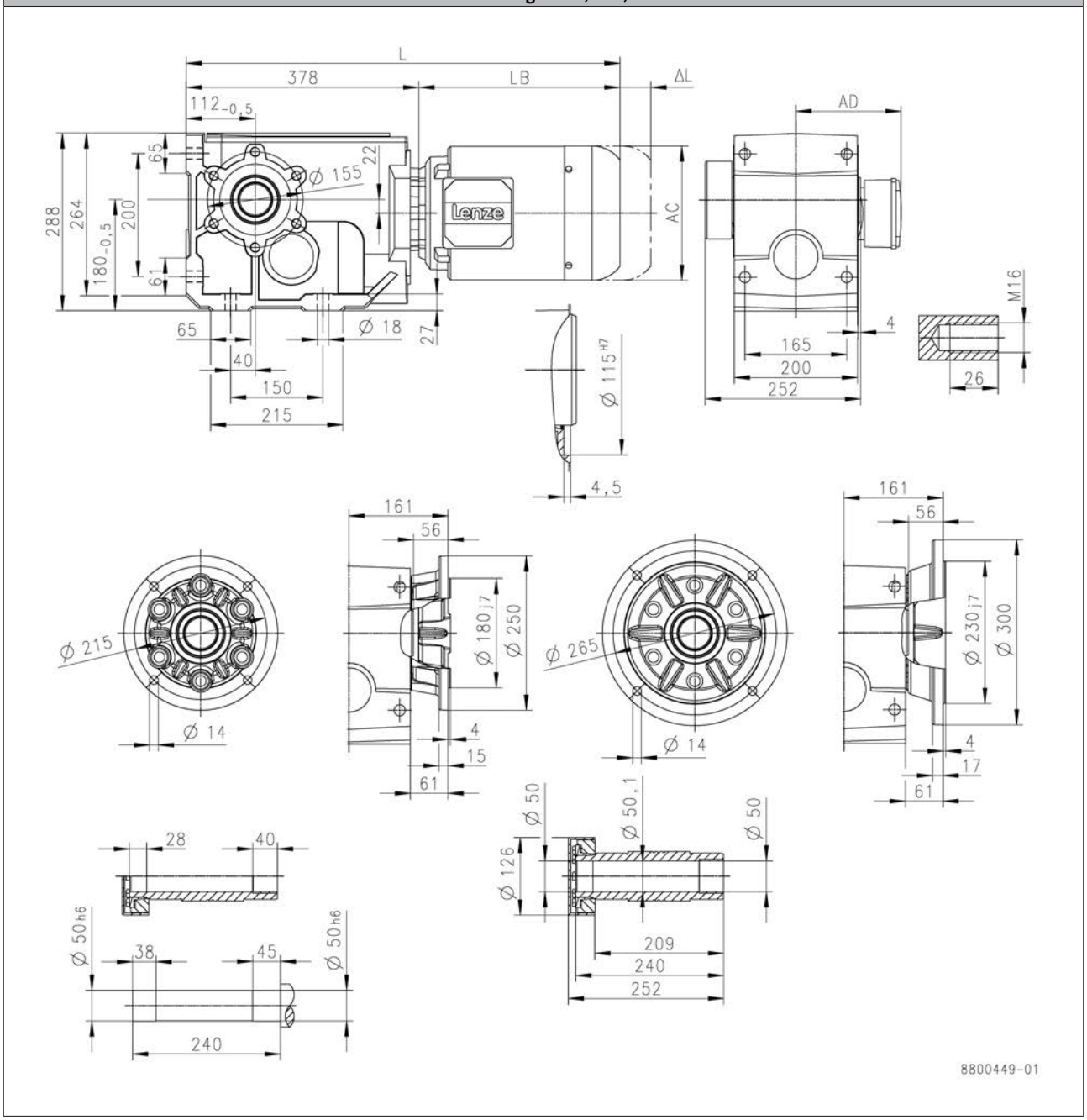

			MD□MA□□	m550				
			071-42	-P80/M4	-P90/M4	-P90/L4	-P100/M4	-P100/L4
Total length	L	[mm]	581	638	702		762	
Motor length	LB	[mm]	203	260	324		384	
Length of motor options	Δ L	[mm]	165	183	175		170	
Motor diameter	AC	[mm]	139	157	177		195	
Distance motor/connection	AD	[mm]	109	148	154		164	

L = length of the motor without built-on accessories
ΔL = additional length of the built-on accessories (longest type)

Dimensions, 4-pole motors

g500-B1500

Dimensions hollow shaft with shrink disc
Gearbox design: SBR, SAR, SAK

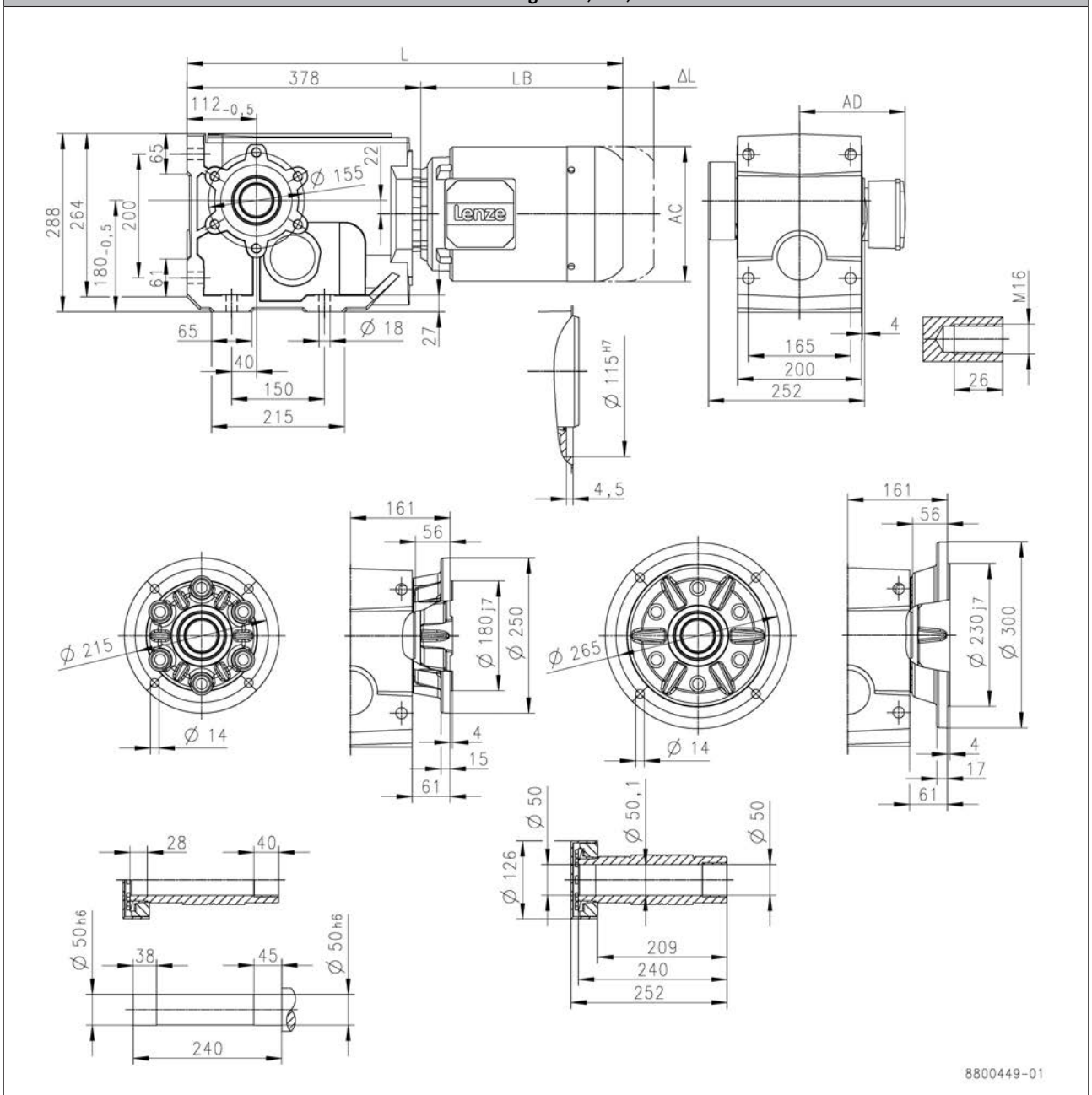

			m550				
			-P112/M4	-P132/M4	-P132/L4	-P160/M4	-P160/L4
Total length	L	[mm]	769	836		947	
Motor length	LB	[mm]	391	458		569	
Length of motor options	Δ L	[mm]	183	201		237	
Motor diameter	AC	[mm]	219	261		313	
Distance motor/connection	AD	[mm]	171	182		231	

L = length of the motor without built-on accessories
ΔL = additional length of the built-on accessories (longest type)

Dimensions, 4-pole motors

g500-B1500

Dimensions with solid shaft
Gearbox design: VBR, VAR, VAK

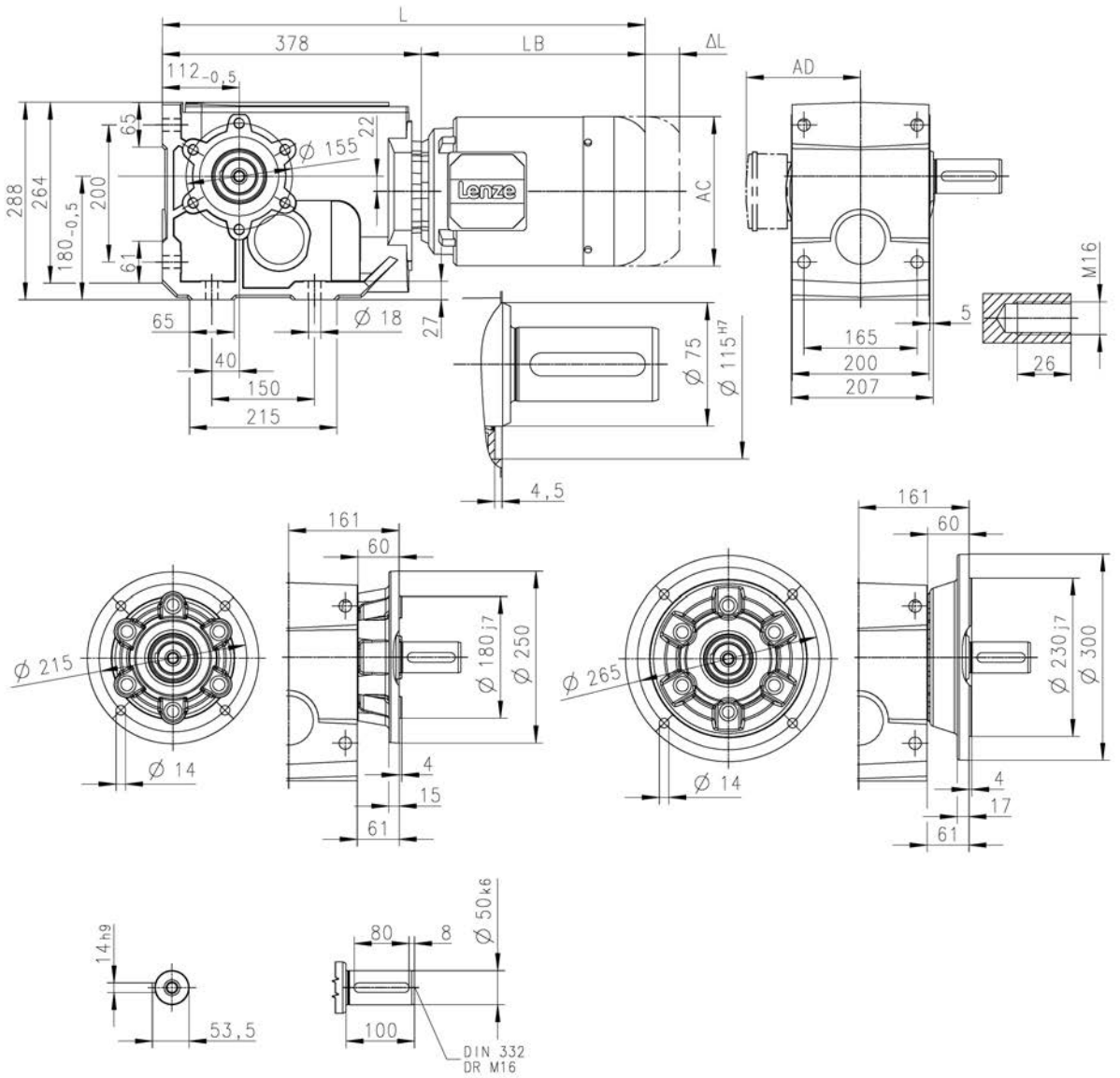

			MD□MA□□	m550				
			071-42	-P80/M4	-P90/M4	-P90/L4	-P100/M4	-P100/L4
Total length	L	[mm]	581	638	702		762	
Motor length	LB	[mm]	203	260	324		384	
Length of motor options	Δ L	[mm]	165	183	175		170	
Motor diameter	AC	[mm]	139	157	177		195	
Distance motor/connection	AD	[mm]	109	148	154		164	

L = length of the motor without built-on accessories
ΔL = additional length of the built-on accessories (longest type)

Dimensions, 4-pole motors

g500-B1500

Dimensions with solid shaft
Gearbox design: VBR, VAR, VAK

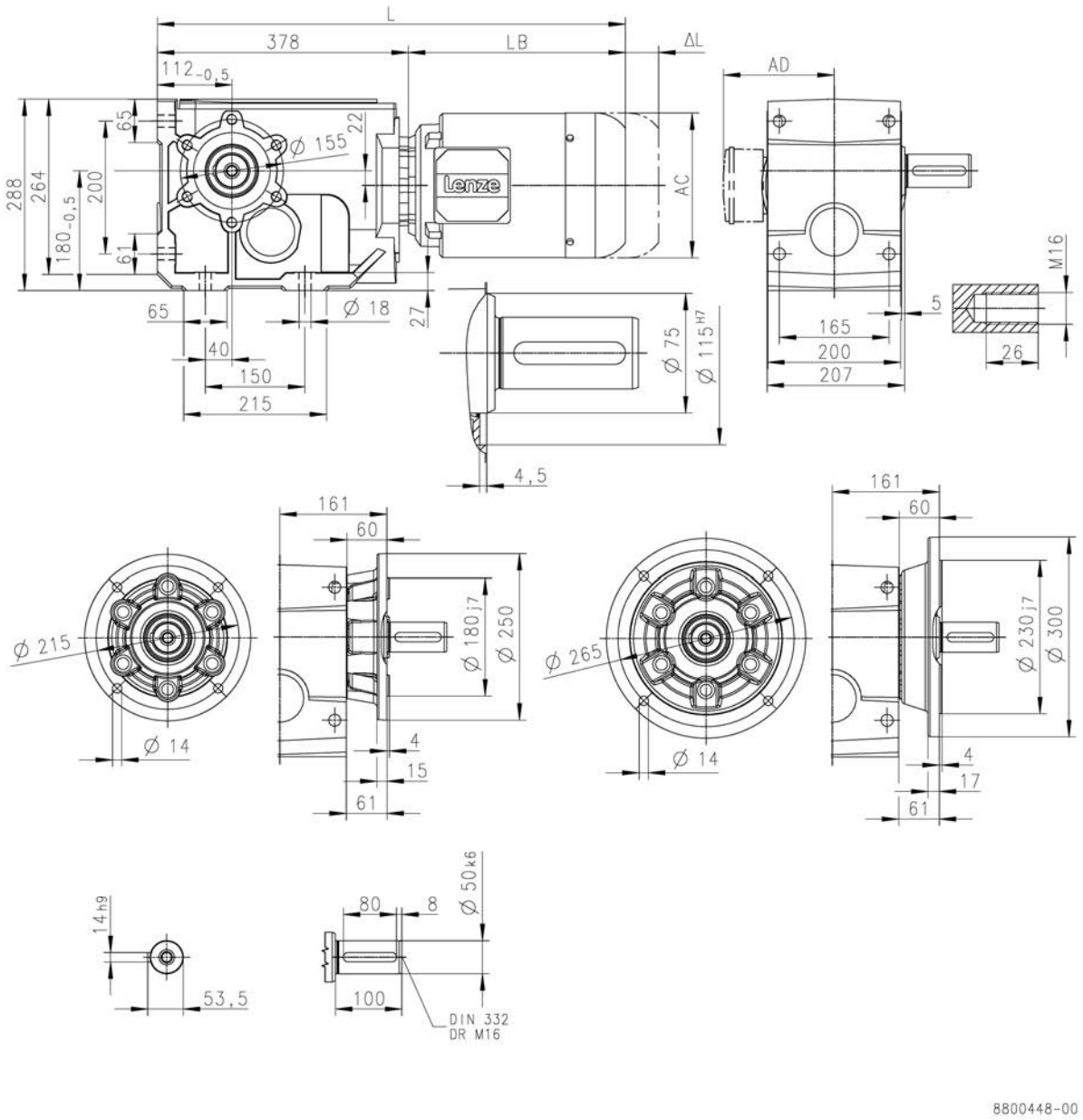

			m550				
			-P112/M4	-P132/M4	-P132/L4	-P160/M4	-P160/L4
Total length	L	[mm]	769	836		947	
Motor length	LB	[mm]	391	458		569	
Length of motor options	Δ L	[mm]	183	201		237	
Motor diameter	AC	[mm]	219	261		313	
Distance motor/connection	AD	[mm]	171	182		231	

L = length of the motor without built-on accessories
ΔL = additional length of the built-on accessories (longest type)

Dimensions, 4-pole motors

g500-B2700

Dimensions with hollow shaft
Gearbox design: HBR, HAR, HAK

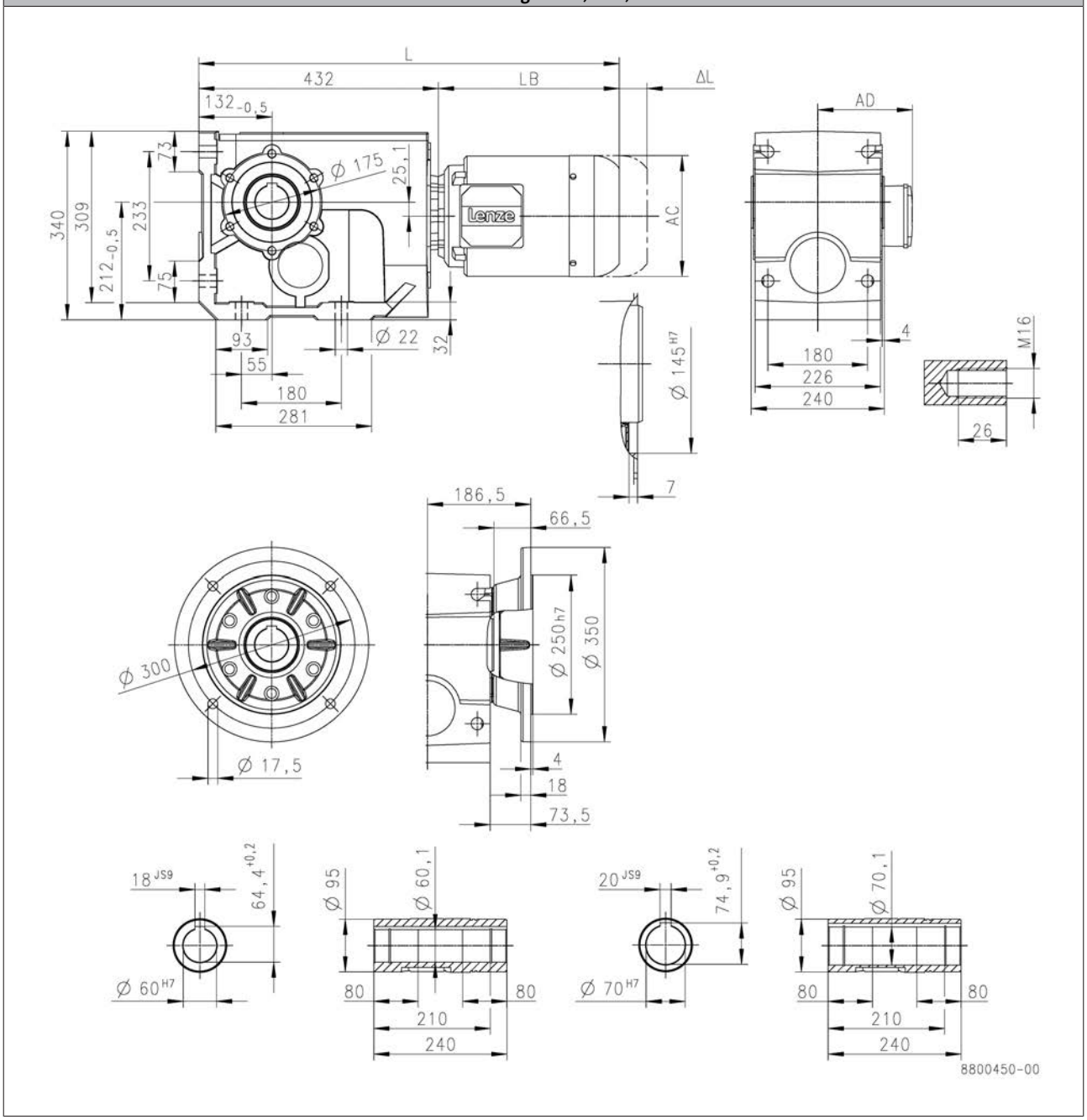

			m550				
			-P90/M4	-P90/L4	-P100/M4	-P100/L4	-P112/M4
Total length	L	[mm]	756		816		823
Motor length	LB	[mm]	324		384		391
Length of motor options	Δ L	[mm]	175		170		183
Motor diameter	AC	[mm]	177		195		219
Distance motor/connection	AD	[mm]	154		164		171

L = length of the motor without built-on accessories
ΔL = additional length of the built-on accessories (longest type)

Dimensions, 4-pole motors

g500-B2700

Dimensions with hollow shaft
Gearbox design: HBR, HAR, HAK

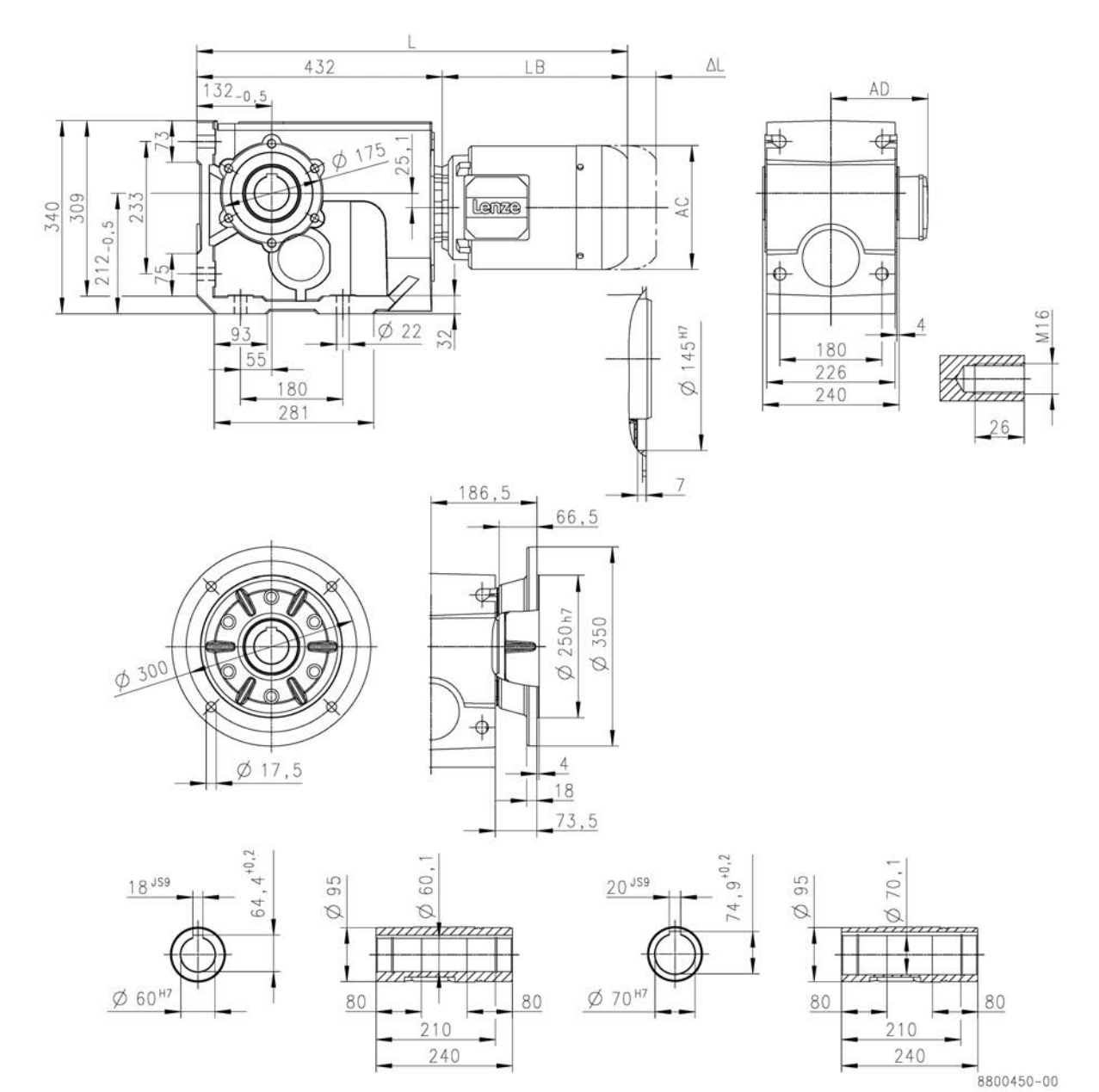

			m550			
			-P132/M4	-P132/L4	-P160/M4	-P160/L4
Total length	L	[mm]	890		1001	
Motor length	LB	[mm]	458		569	
Length of motor options	Δ L	[mm]	201		237	
Motor diameter	AC	[mm]	261		313	
Distance motor/connection	AD	[mm]	182		231	

L = length of the motor without built-on accessories
ΔL = additional length of the built-on accessories (longest type)

Dimensions, 4-pole motors

g500-B2700

Dimensions hollow shaft with shrink disc
Gearbox design: SBR, SAR, SAK

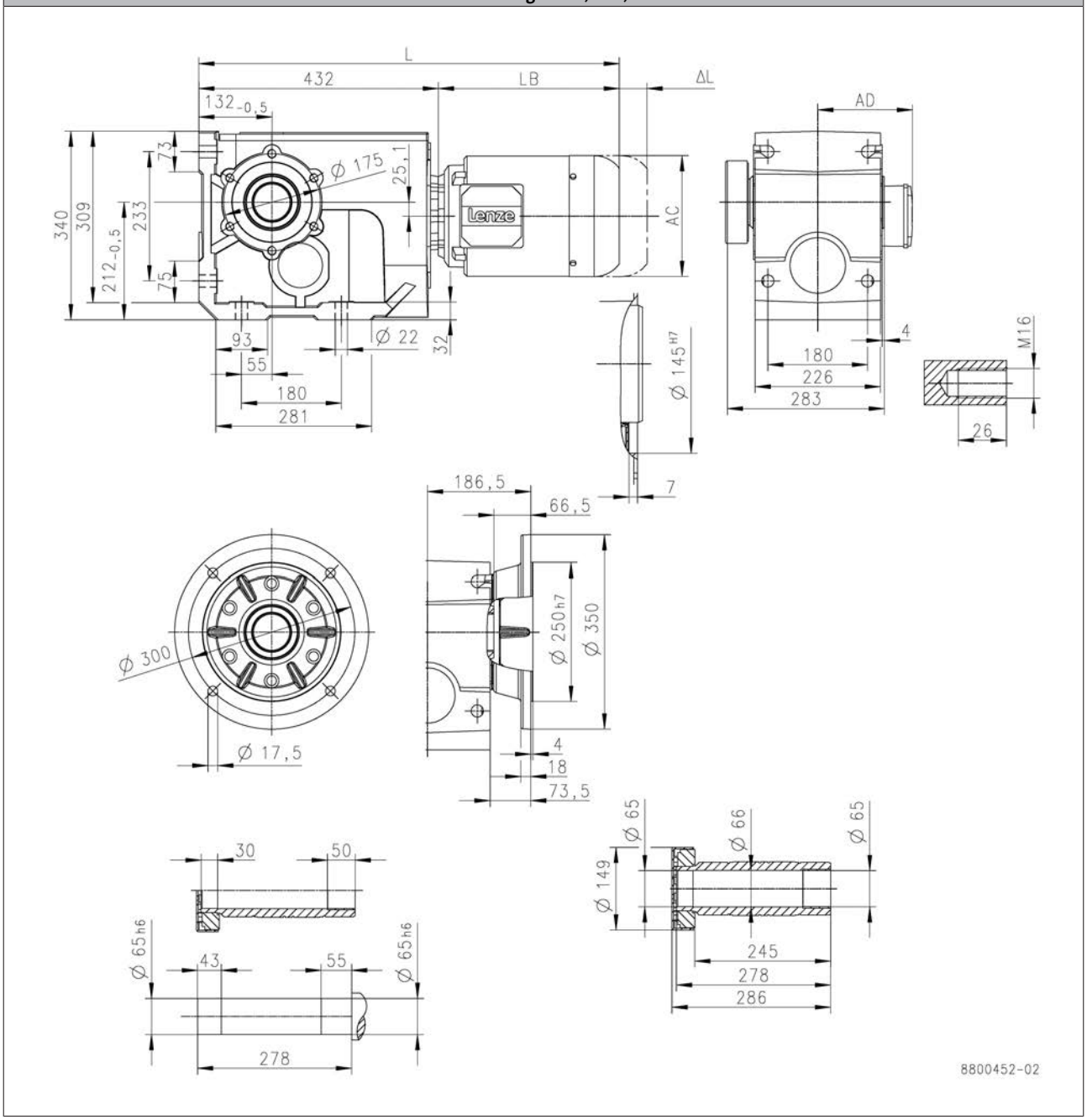

			m550				
			-P90/M4	-P90/L4	-P100/M4	-P100/L4	-P112/M4
Total length	L	[mm]	756		816		823
Motor length	LB	[mm]	324		384		391
Length of motor options	Δ L	[mm]	175		170		183
Motor diameter	AC	[mm]	177		195		219
Distance motor/connection	AD	[mm]	154		164		171

L = length of the motor without built-on accessories
ΔL = additional length of the built-on accessories (longest type)

Dimensions, 4-pole motors

g500-B2700

Dimensions hollow shaft with shrink disc
Gearbox design: SBR, SAR, SAK

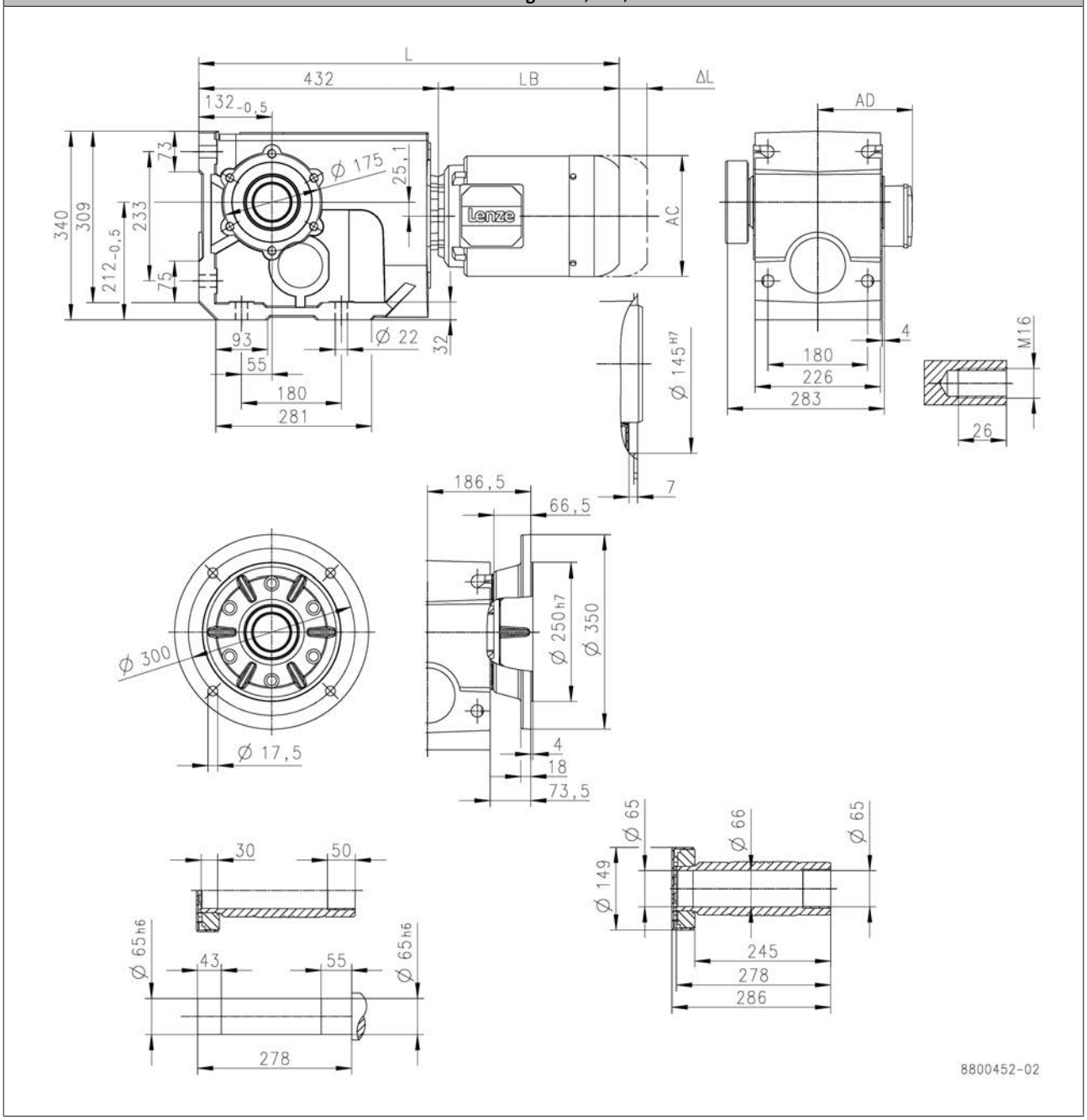

			m550			
			-P132/M4	-P132/L4	-P160/M4	-P160/L4
Total length	L	[mm]	890		1001	
Motor length	LB	[mm]	458		569	
Length of motor options	Δ L	[mm]	201		237	
Motor diameter	AC	[mm]	261		313	
Distance motor/connection	AD	[mm]	182		231	

L = length of the motor without built-on accessories
ΔL = additional length of the built-on accessories (longest type)

Dimensions, 4-pole motors

g500-B2700

Dimensions with solid shaft
Gearbox design: VBR, VAR, VAK

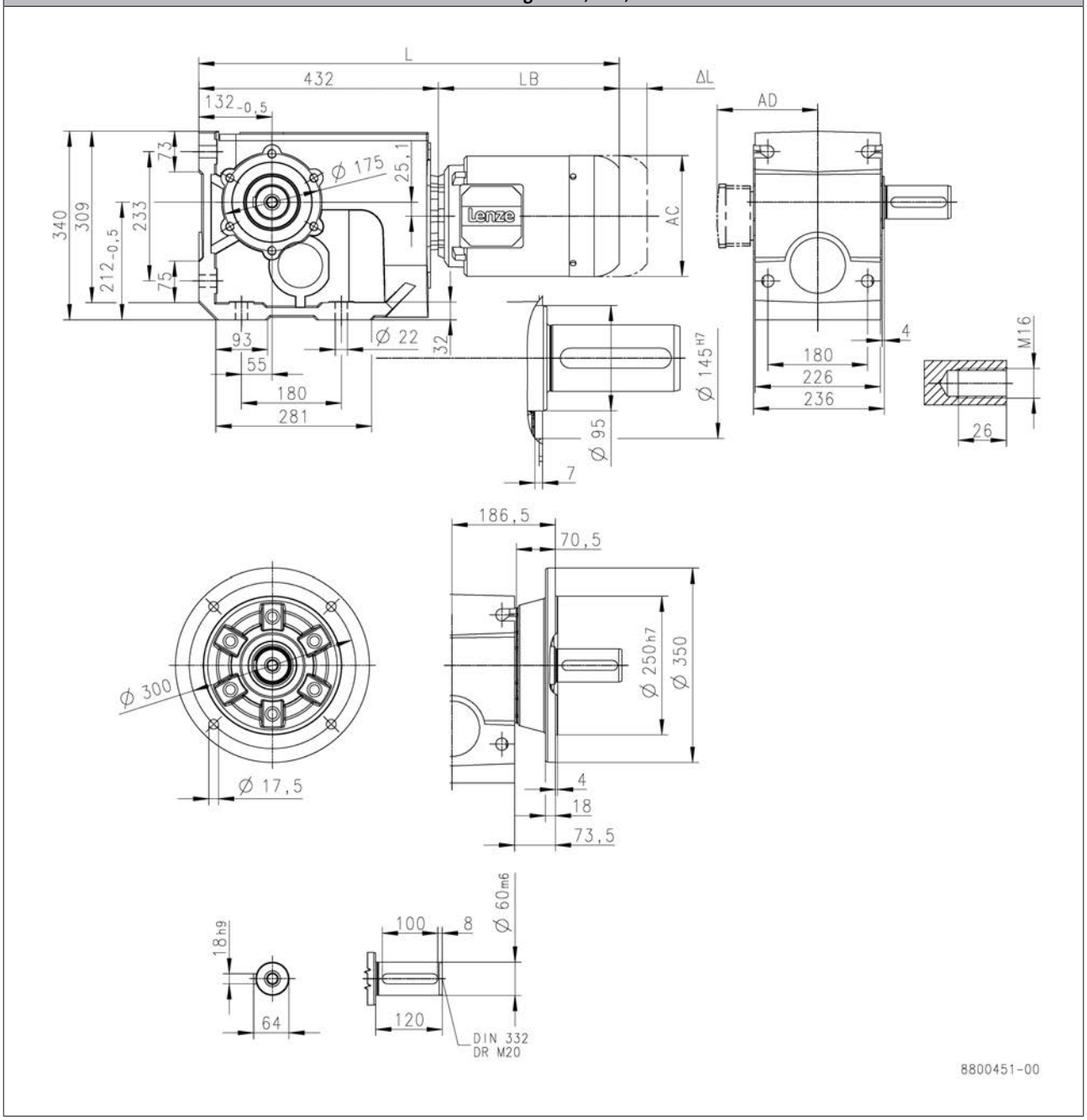

			m550				
			-P90/M4	-P90/L4	-P100/M4	-P100/L4	-P112/M4
Total length	L	[mm]	756		816		823
Motor length	LB	[mm]	324		384		391
Length of motor options	Δ L	[mm]	175		170		183
Motor diameter	AC	[mm]	177		195		219
Distance motor/connection	AD	[mm]	154		164		171

L = length of the motor without built-on accessories
ΔL = additional length of the built-on accessories (longest type)

Dimensions, 4-pole motors

g500-B2700

Dimensions with solid shaft
Gearbox design: VBR, VAR, VAK

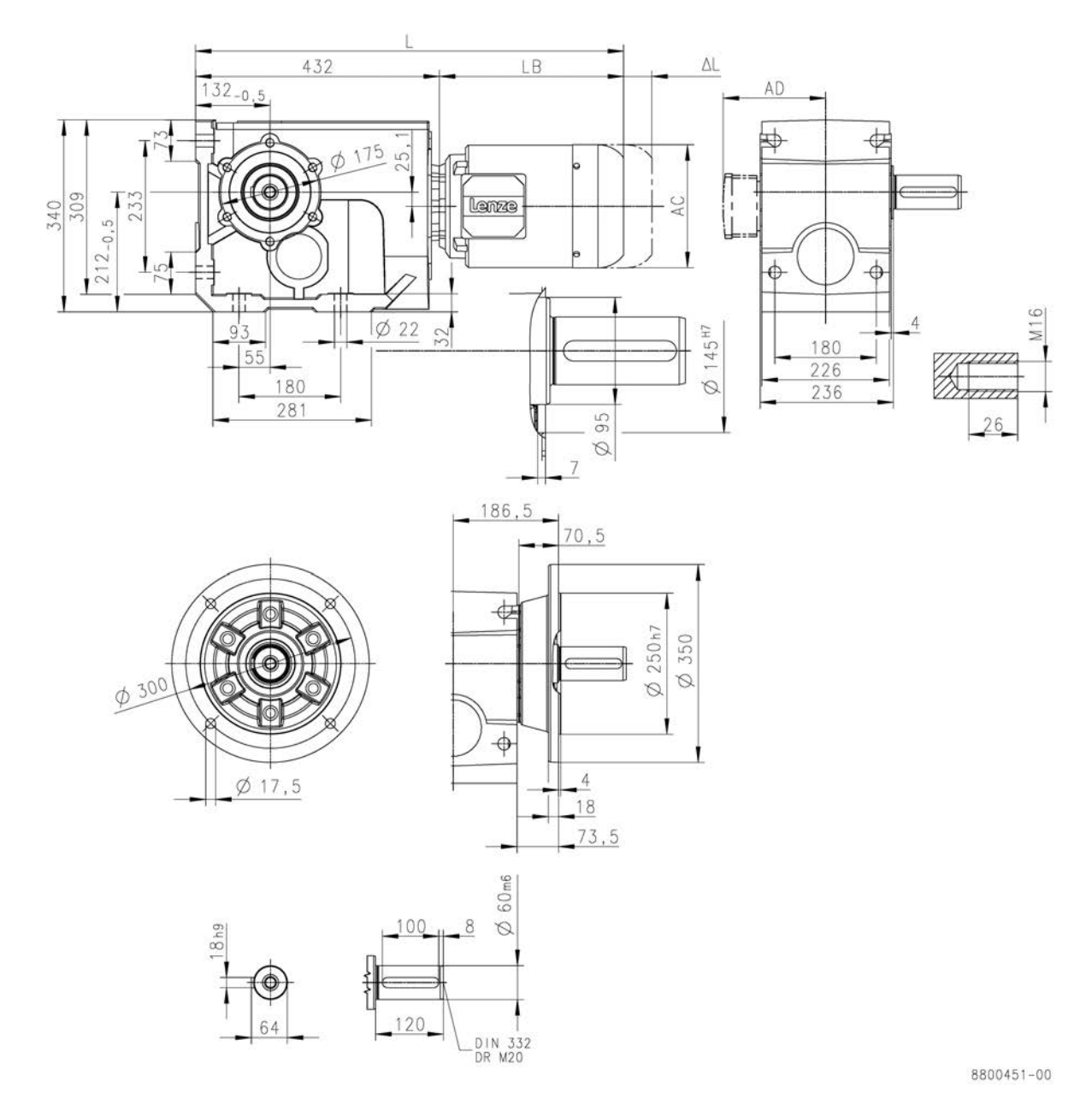

			m550			
			-P132/M4	-P132/L4	-P160/M4	-P160/L4
Total length	L	[mm]	890		1001	
Motor length	LB	[mm]	458		569	
Length of motor options	Δ L	[mm]	201		237	
Motor diameter	AC	[mm]	261		313	
Distance motor/connection	AD	[mm]	182		231	

L = length of the motor without built-on accessories
ΔL = additional length of the built-on accessories (longest type)

Dimensions, 4-pole motors

g500-B4300

Dimensions with hollow shaft
Gearbox design: HBR, HAR, HAK

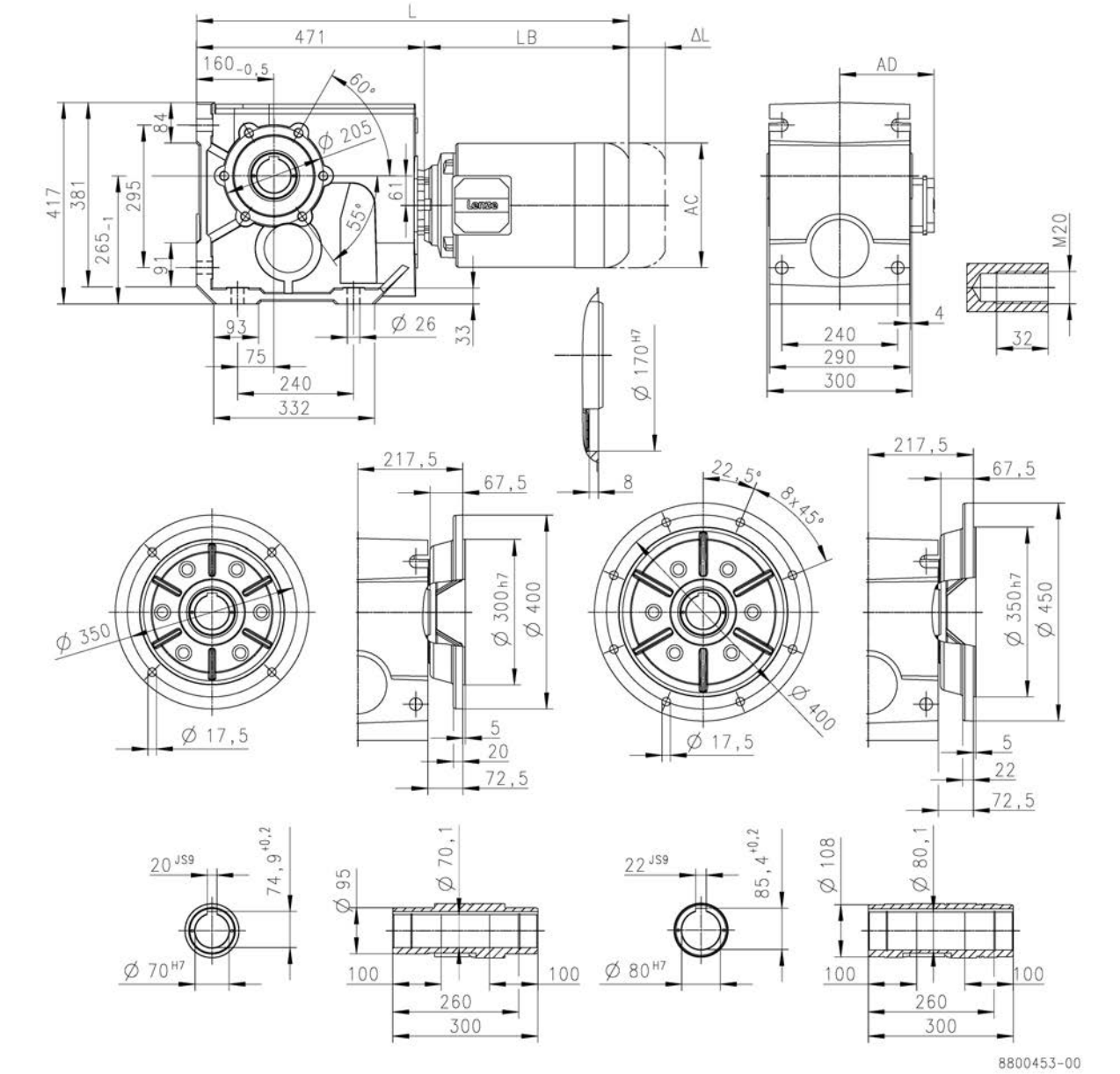

			m550						
			-P90/M4	-P90/L4	-P100/M4	-P100/L4	-P112/M4	-P132/M4	-P132/L4
Total length	L	[mm]	795		855		862	929	
Motor length	LB	[mm]	324		384		391	458	
Length of motor options	Δ L	[mm]	175		170		183	201	
Motor diameter	AC	[mm]	177		195		219	261	
Distance motor/connection	AD	[mm]	154		164		171	182	

L = length of the motor without built-on accessories
ΔL = additional length of the built-on accessories (longest type)

Dimensions, 4-pole motors

g500-B4300

Dimensions with hollow shaft
Gearbox design: HBR, HAR, HAK

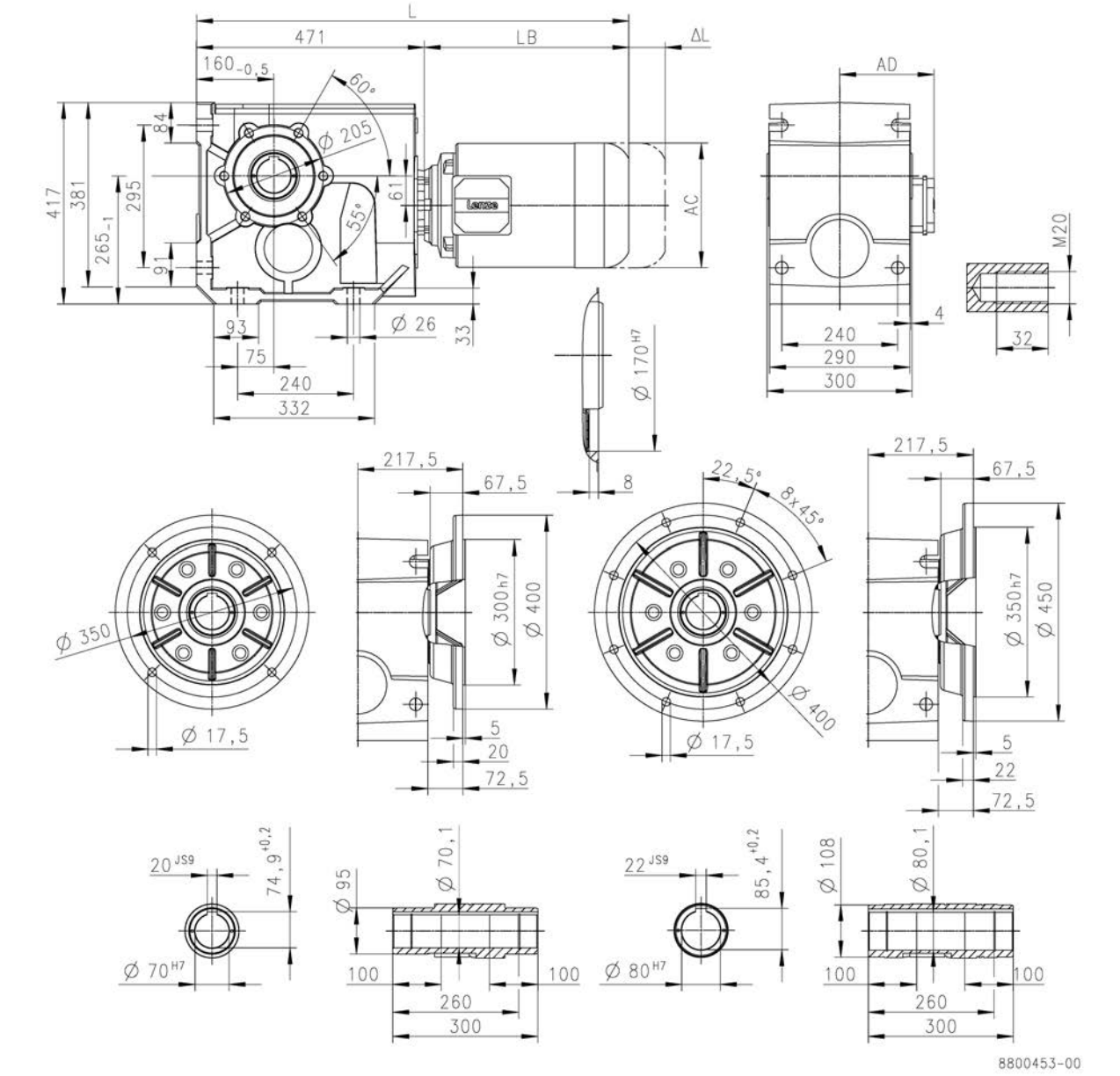

			m550				
			-P160/M4	-P160/L4	-P180/M4	-P180/L4	-P180/V4
Total length	L	[mm]	1040		1116		1160
Motor length	LB	[mm]	569		645		689
Length of motor options	Δ L	[mm]	237		267		
Motor diameter	AC	[mm]	313		351		
Distance motor/connection	AD	[mm]	231		282		

L = length of the motor without built-on accessories
ΔL = additional length of the built-on accessories (longest type)

Dimensions, 4-pole motors

g500-B4300

Dimensions hollow shaft with shrink disc
Gearbox design: SBR, SAR, SAK

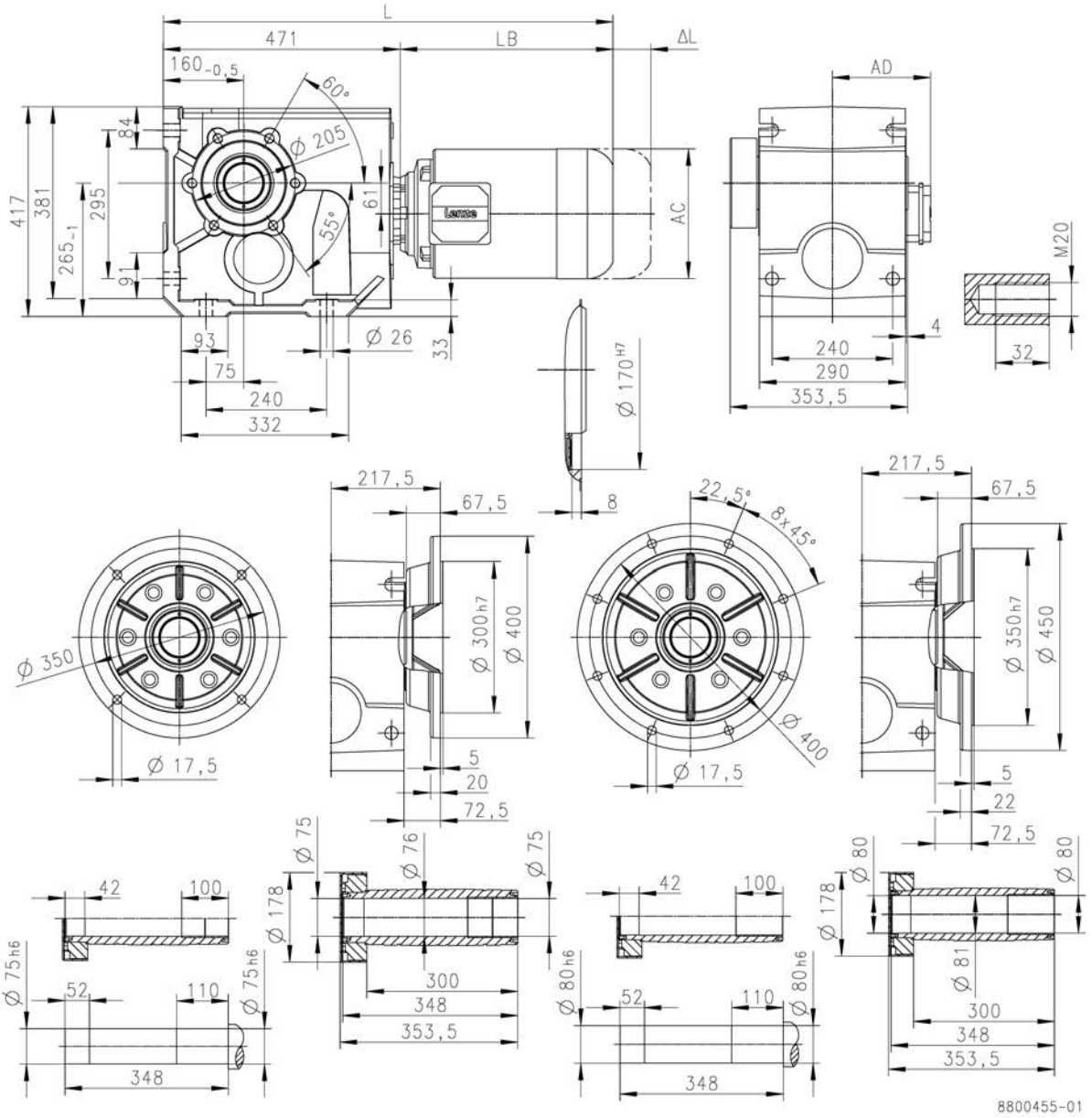

			m550						
			-P90/M4	-P90/L4	-P100/M4	-P100/L4	-P112/M4	-P132/M4	-P132/L4
Total length	L	[mm]	795		855		862	929	
Motor length	LB	[mm]	324		384		391	458	
Length of motor options	Δ L	[mm]	175		170		183	201	
Motor diameter	AC	[mm]	177		195		219	261	
Distance motor/connection	AD	[mm]	154		164		171	182	

L = length of the motor without built-on accessories
ΔL = additional length of the built-on accessories (longest type)

Dimensions, 4-pole motors

g500-B4300

Dimensions hollow shaft with shrink disc
Gearbox design: SBR, SAR, SAK

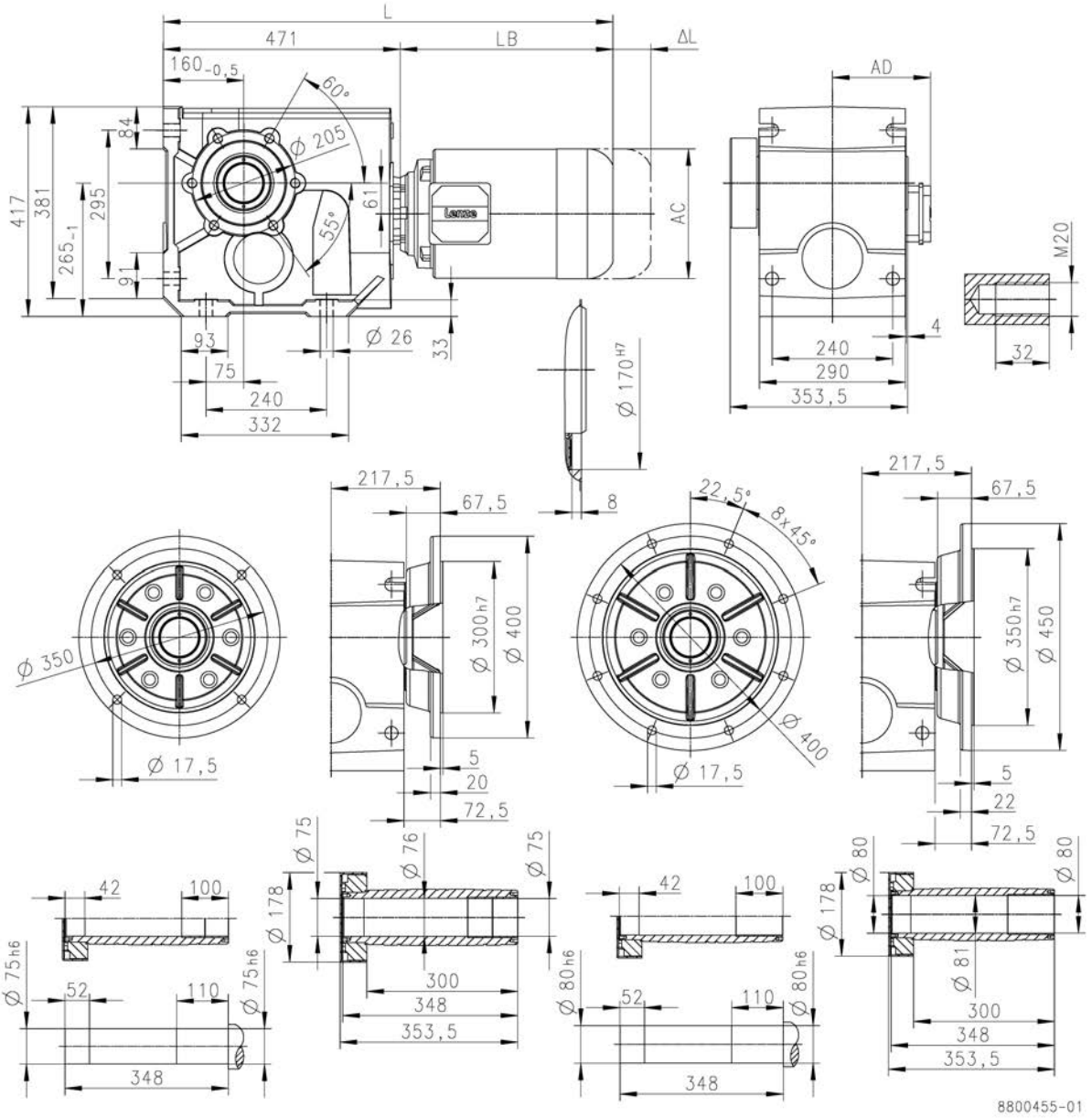

			m550				
			-P160/M4	-P160/L4	-P180/M4	-P180/L4	-P180/V4
Total length	L	[mm]	1040		1116		1160
Motor length	LB	[mm]	569		645		689
Length of motor options	Δ L	[mm]	237		267		
Motor diameter	AC	[mm]	313		351		
Distance motor/connection	AD	[mm]	231		282		

L = length of the motor without built-on accessories
ΔL = additional length of the built-on accessories (longest type)

Dimensions, 4-pole motors

g500-B4300

Dimensions with solid shaft
Gearbox design: VBR, VAR, VAK

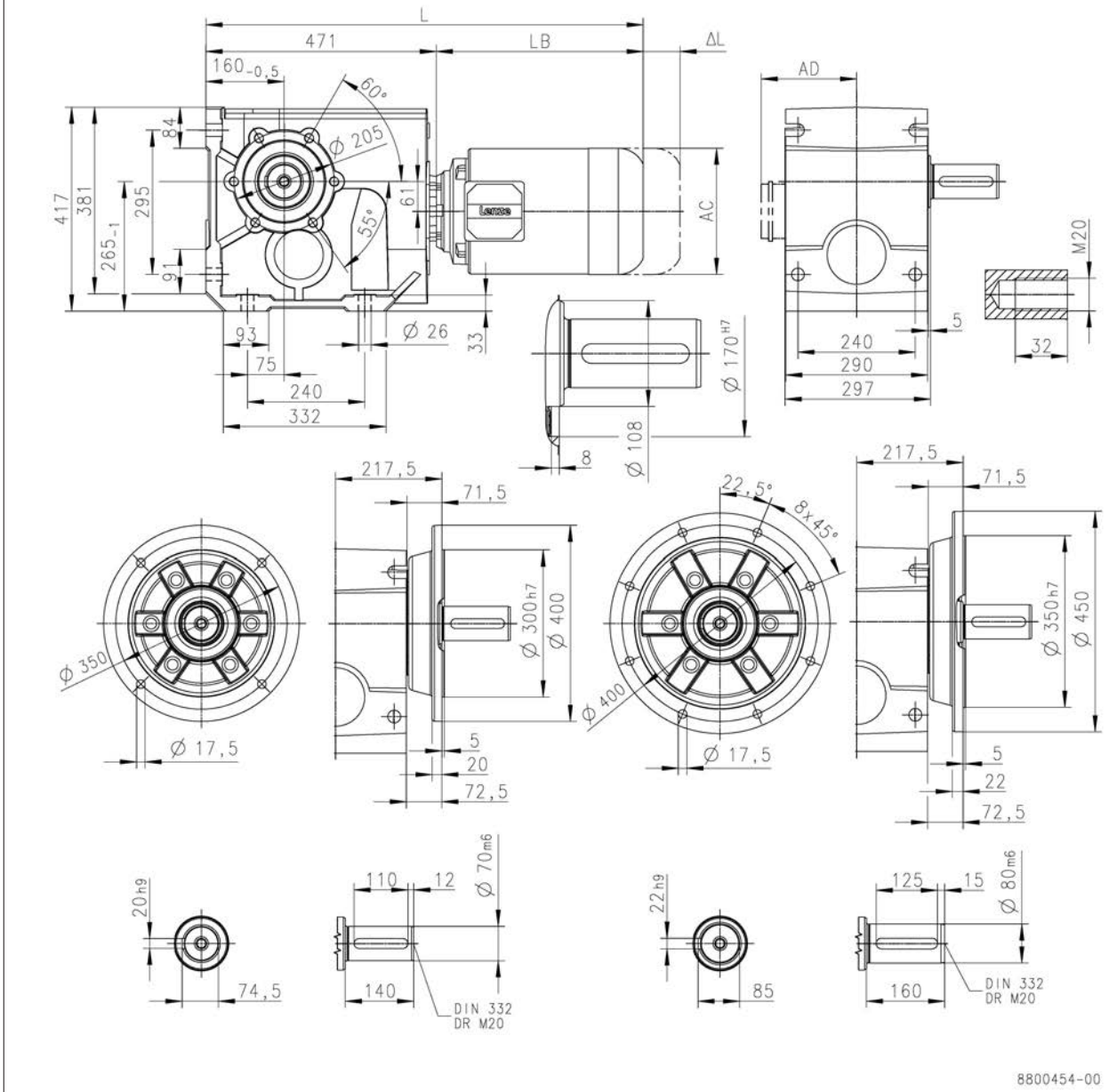

			m550						
			-P90/M4	-P90/L4	-P100/M4	-P100/L4	-P112/M4	-P132/M4	-P132/L4
Total length	L	[mm]	795		855		862	929	
Motor length	LB	[mm]	324		384		391	458	
Length of motor options	Δ L	[mm]	175		170		183	201	
Motor diameter	AC	[mm]	177		195		219	261	
Distance motor/connection	AD	[mm]	154		164		171	182	

L = length of the motor without built-on accessories
ΔL = additional length of the built-on accessories (longest type)

Dimensions, 4-pole motors

g500-B4300

Dimensions with solid shaft
Gearbox design: VBR, VAR, VAK

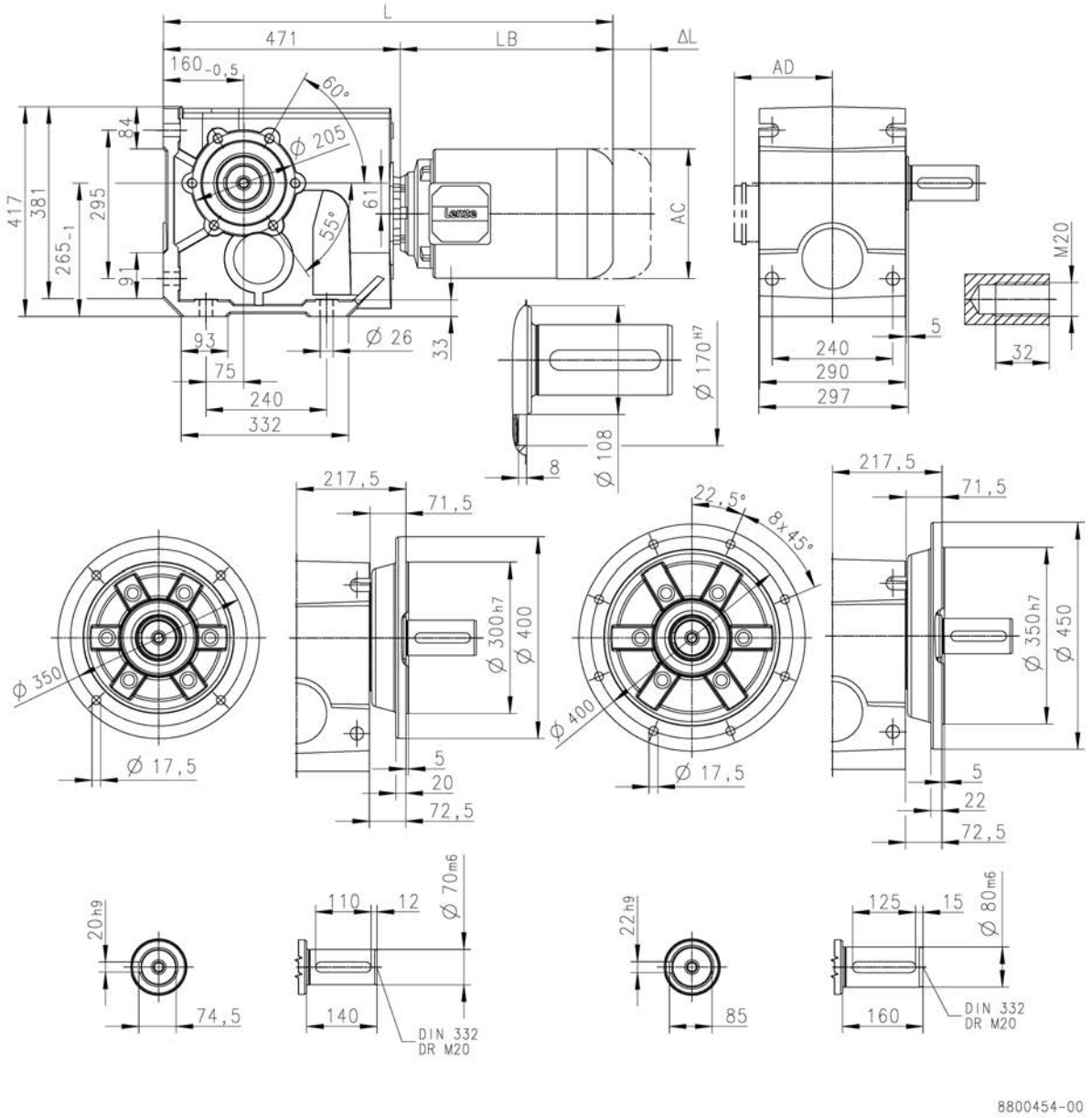

			m550				
			-P160/M4	-P160/L4	-P180/M4	-P180/L4	-P180/V4
Total length	L	[mm]	1040		1116		1160
Motor length	LB	[mm]	569		645		689
Length of motor options	Δ L	[mm]	237		267		
Motor diameter	AC	[mm]	313		351		
Distance motor/connection	AD	[mm]	231		282		

L = length of the motor without built-on accessories
ΔL = additional length of the built-on accessories (longest type)

Dimensions, 4-pole motors

g500-B8000

Dimensions with hollow shaft
Gearbox design: HBR, HCR/HDR, HCK

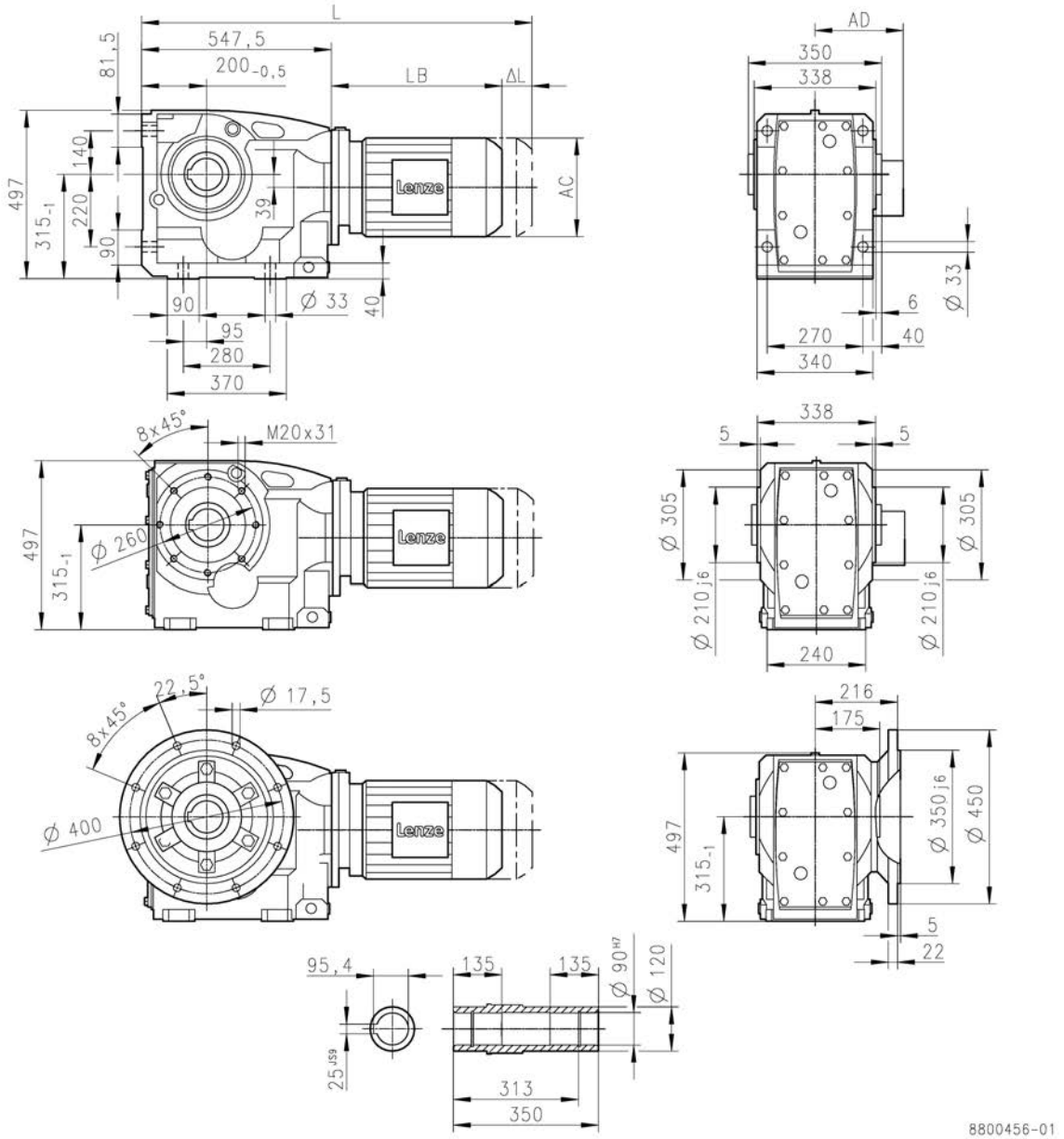

			m540					
			-P90/L4	-P100/M4	-P100/L4	-P112/M4	-P132/M4	-P132/L4
Total length	L	[mm]	897	940			1016	
Motor length	LB	[mm]	349	393			469	
Length of motor options	Δ L	[mm]	213	219		206	259	
Motor diameter	AC	[mm]	174	198		222	264	
Distance motor/connection	AD	[mm]	154	171		182	207	

L = length of the motor without built-on accessories
ΔL = additional length of the built-on accessories (longest type)

Dimensions, 4-pole motors

g500-B8000

Dimensions with hollow shaft
Gearbox design: HBR, HCR/HDR, HCK

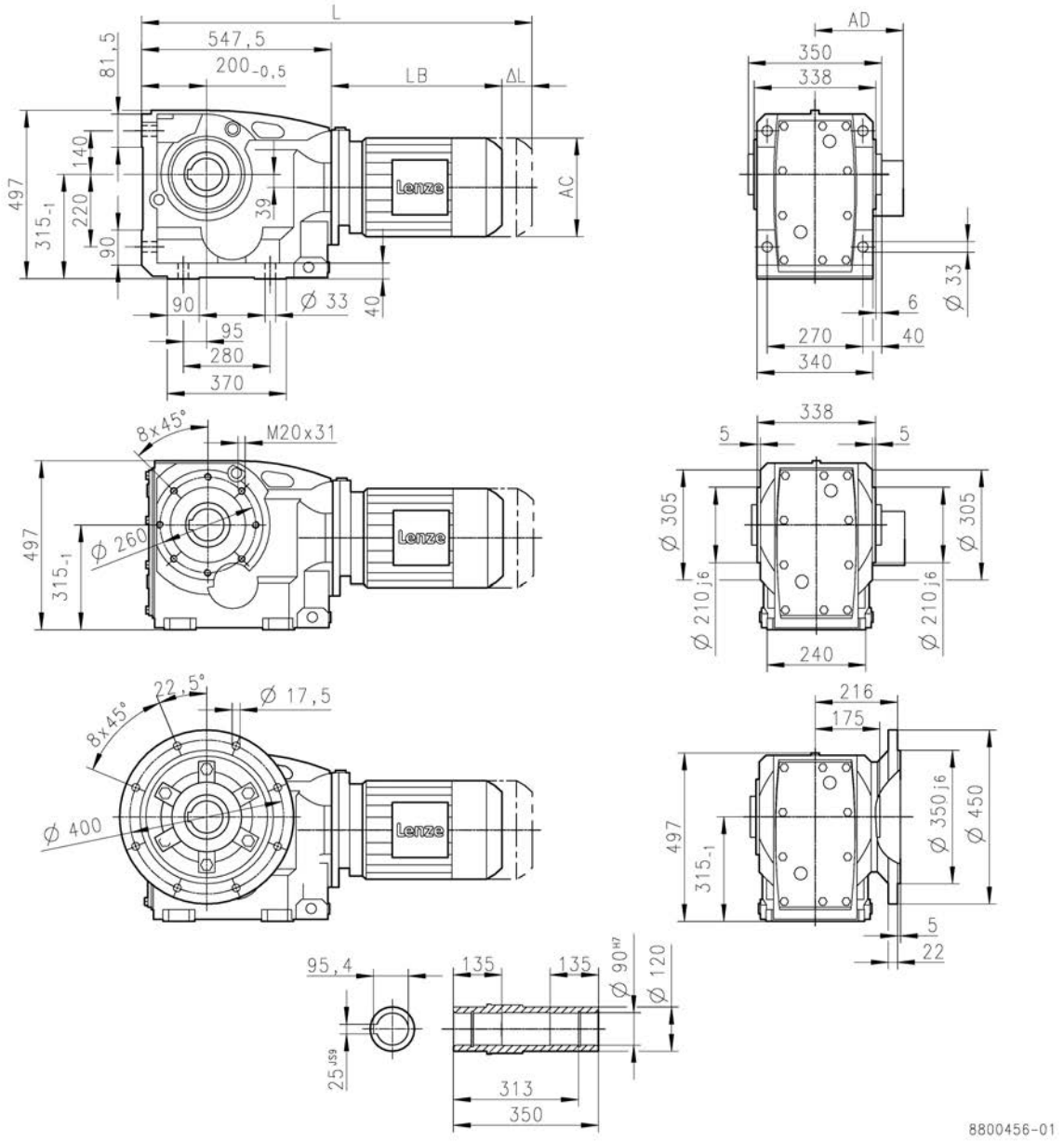

			m540							
			-P160/M4	-P160/L4	-P180/M4	-P180/L4	-P200/M4	-P225/M4	-P225/L4	-P250/M4
Total length	L	[mm]	1048	1108	1121	1151	1214	1241	1301	
Motor length	LB	[mm]	501	561	574	604	667	693	753	
Length of motor options	Δ L	[mm]	285		274		293	787		827
Motor diameter	AC	[mm]	318		353		393	439		487
Distance motor/connection	AD	[mm]	241		292		315	337		408

L = length of the motor without built-on accessories
ΔL = additional length of the built-on accessories (longest type)

Dimensions, 4-pole motors

g500-B8000

Dimensions hollow shaft with shrink disc
Gearbox design: SDR, SCR/SDR, SCK

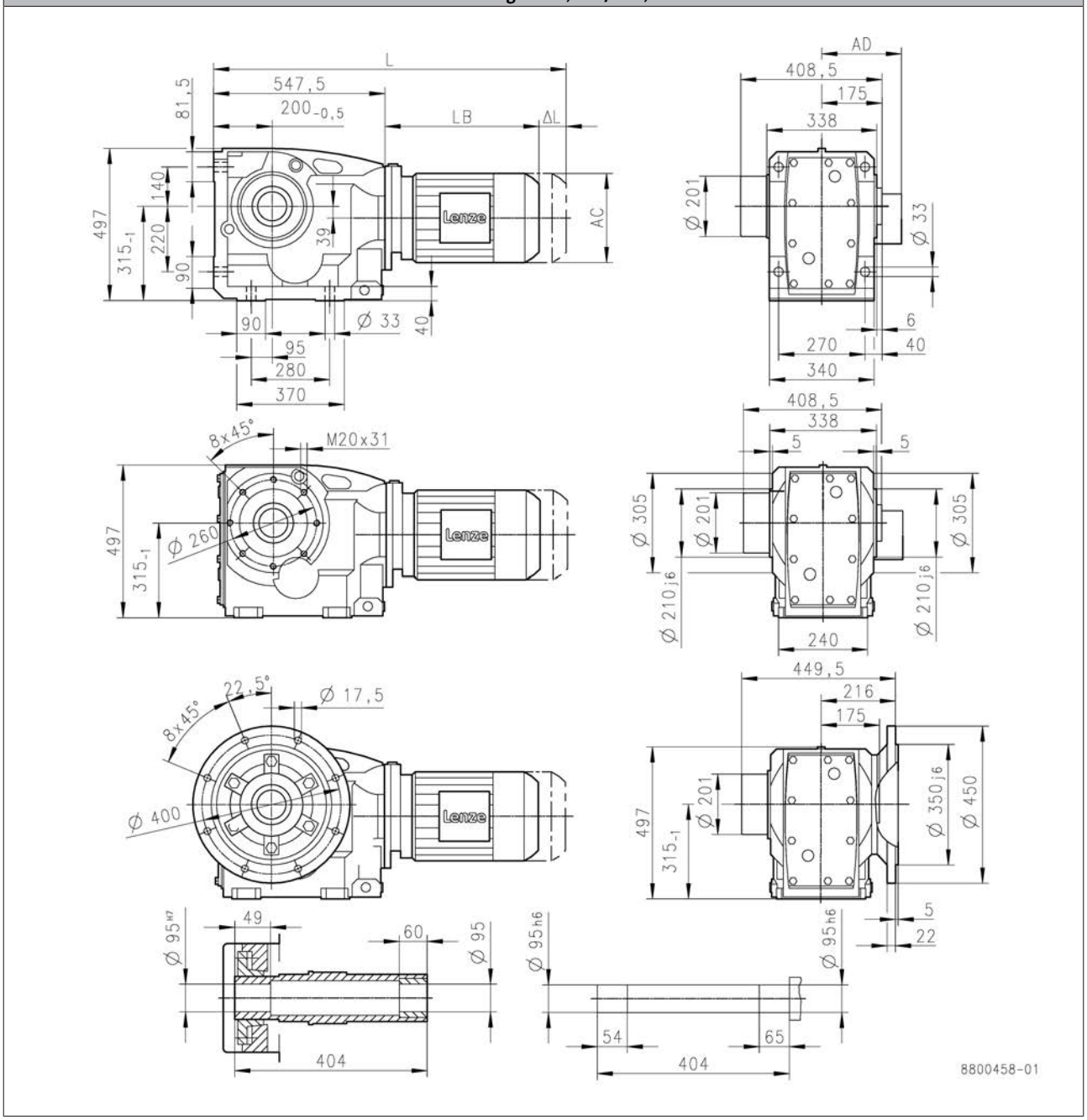

			m540					
			-P90/L4	-P100/M4	-P100/L4	-P112/M4	-P132/M4	-P132/L4
Total length	L	[mm]	897	940			1016	
Motor length	LB	[mm]	349	393			469	
Length of motor options	Δ L	[mm]	213	219		206	259	
Motor diameter	AC	[mm]	174	198		222	264	
Distance motor/connection	AD	[mm]	154	171		182	207	

L = length of the motor without built-on accessories
ΔL = additional length of the built-on accessories (longest type)

Dimensions, 4-pole motors

g500-B8000

Dimensions hollow shaft with shrink disc
Gearbox design: SDR, SCR/SDR, SCK

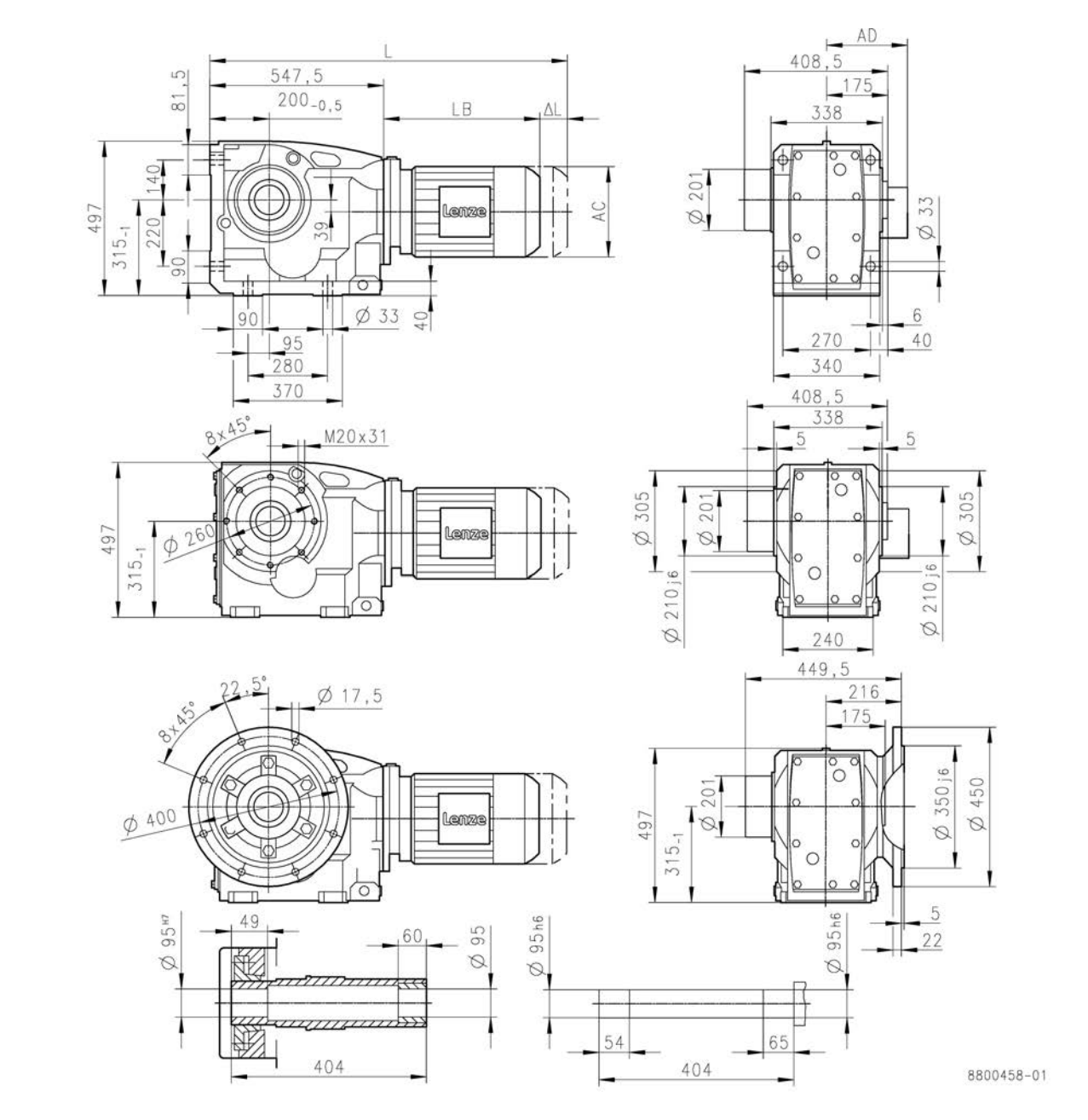

			m540							
			-P160/M4	-P160/L4	-P180/M4	-P180/L4	-P200/M4	-P225/M4	-P225/L4	-P250/M4
Total length	L	[mm]	1048	1108	1121	1151	1214	1241	1301	
Motor length	LB	[mm]	501	561	574	604	667	693	753	
Length of motor options	Δ L	[mm]	285		274		293	787		827
Motor diameter	AC	[mm]	318		353		393	439		487
Distance motor/connection	AD	[mm]	241		292		315	337		408

L = length of the motor without built-on accessories
ΔL = additional length of the built-on accessories (longest type)

Dimensions, 4-pole motors

g500-B8000

Dimensions with solid shaft
Gearbox design: VBR, VCR, VCK

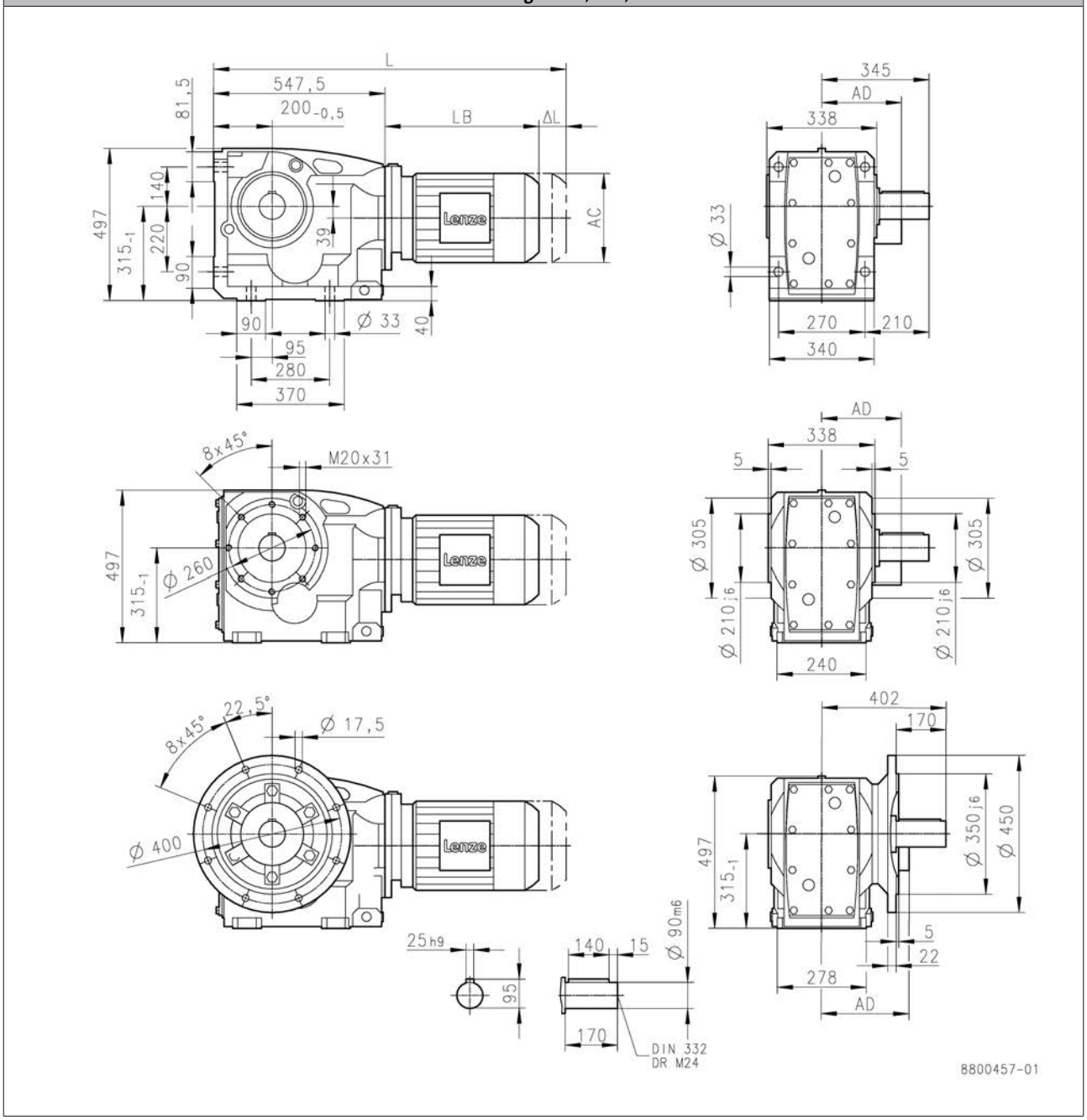

			m540					
			-P90/L4	-P100/M4	-P100/L4	-P112/M4	-P132/M4	-P132/L4
Total length	L	[mm]	897	940			1016	
Motor length	LB	[mm]	349	393			469	
Length of motor options	Δ L	[mm]	213	219		206	259	
Motor diameter	AC	[mm]	174	198		222	264	
Distance motor/connection	AD	[mm]	154	171		182	207	

L = length of the motor without built-on accessories
ΔL = additional length of the built-on accessories (longest type)

Dimensions, 4-pole motors

g500-B8000

Dimensions with solid shaft
Gearbox design: VBR, VCR, VCK

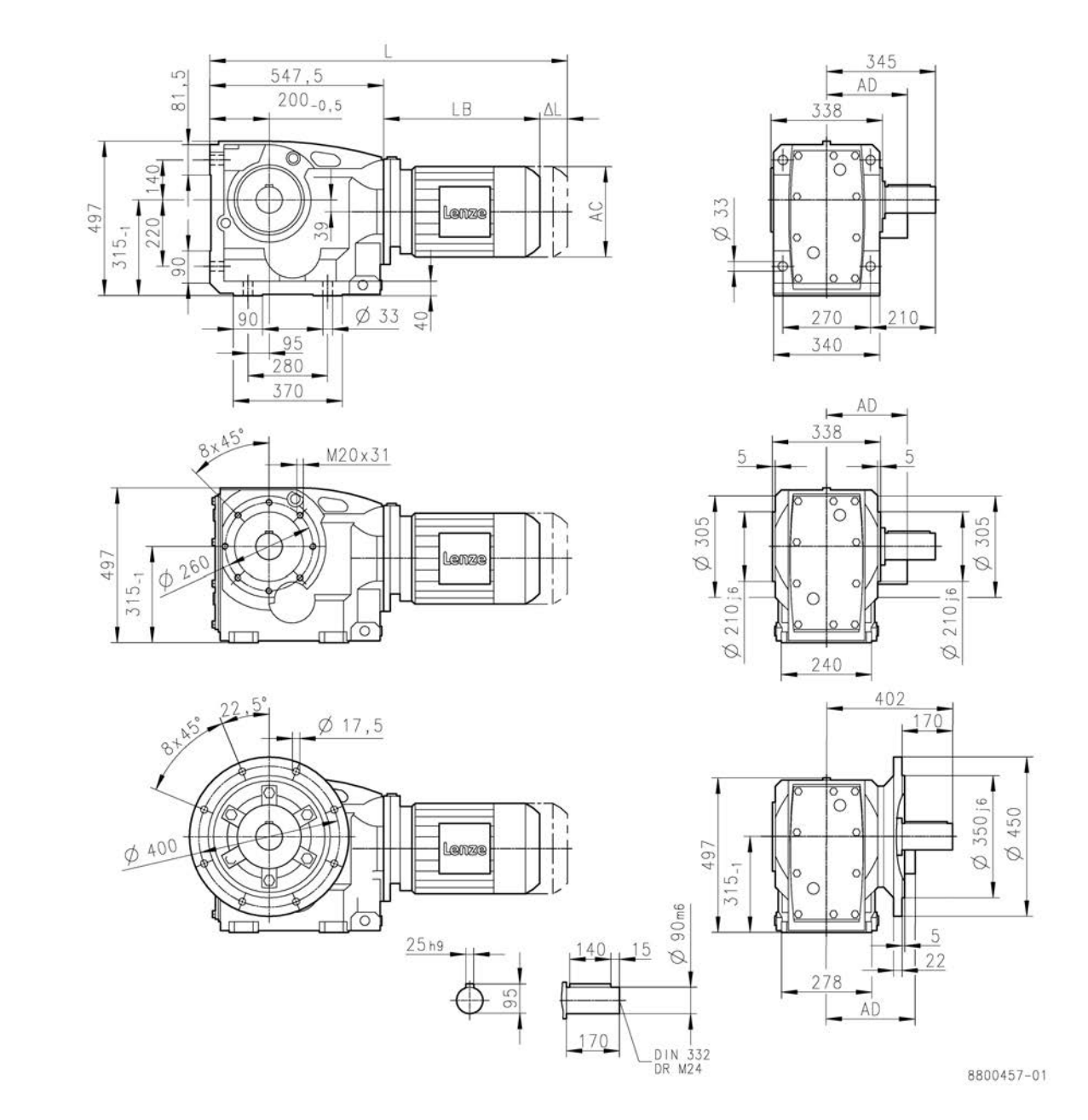

			m540							
			-P160/M4	-P160/L4	-P180/M4	-P180/L4	-P200/M4	-P225/M4	-P225/L4	-P250/M4
Total length	L	[mm]	1048	1108	1121	1151	1214	1241	1301	
Motor length	LB	[mm]	501	561	574	604	667	693	753	
Length of motor options	Δ L	[mm]	285		274		293	787		827
Motor diameter	AC	[mm]	318		353		393	439		487
Distance motor/connection	AD	[mm]	241		292		315	337		408

L = length of the motor without built-on accessories
ΔL = additional length of the built-on accessories (longest type)

Dimensions, 4-pole motors

g500-B13000

Dimensions with hollow shaft
Gearbox design: HBR, HAR, HAK

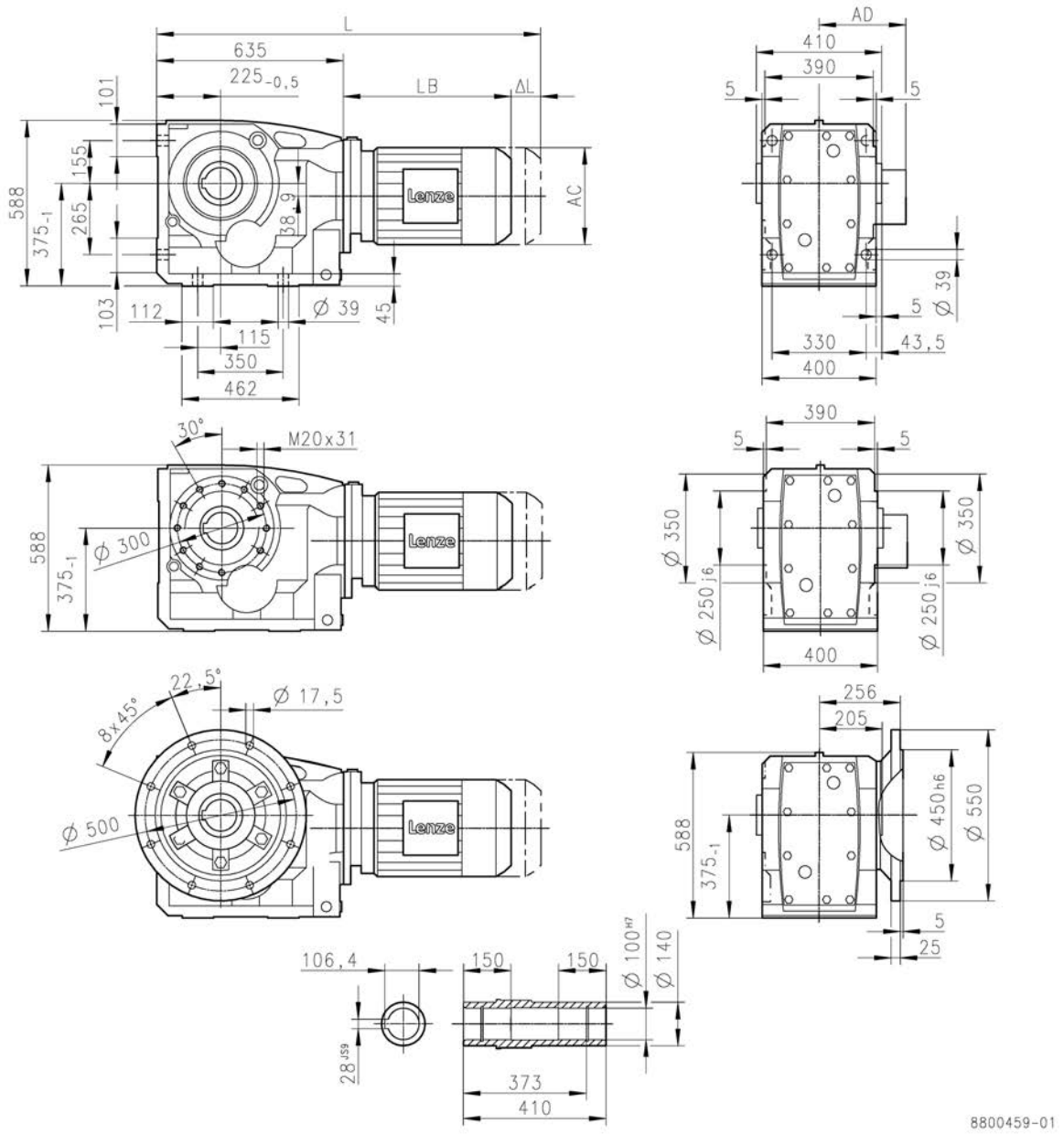

			m540						
			-P100/M4	-P100/L4	-P112/M4	-P132/M4	-P132/L4	-P160/M4	-P160/L4
Total length	L	[mm]	1026			1097		1129	1189
Motor length	LB	[mm]	391			462		494	554
Length of motor options	Δ L	[mm]	219		206	259		285	
Motor diameter	AC	[mm]	198		222	264		318	
Distance motor/connection	AD	[mm]	171		182	207		241	

L = length of the motor without built-on accessories
ΔL = additional length of the built-on accessories (longest type)

Dimensions, 4-pole motors

g500-B13000

Dimensions with hollow shaft
Gearbox design: HBR, HAR, HAK

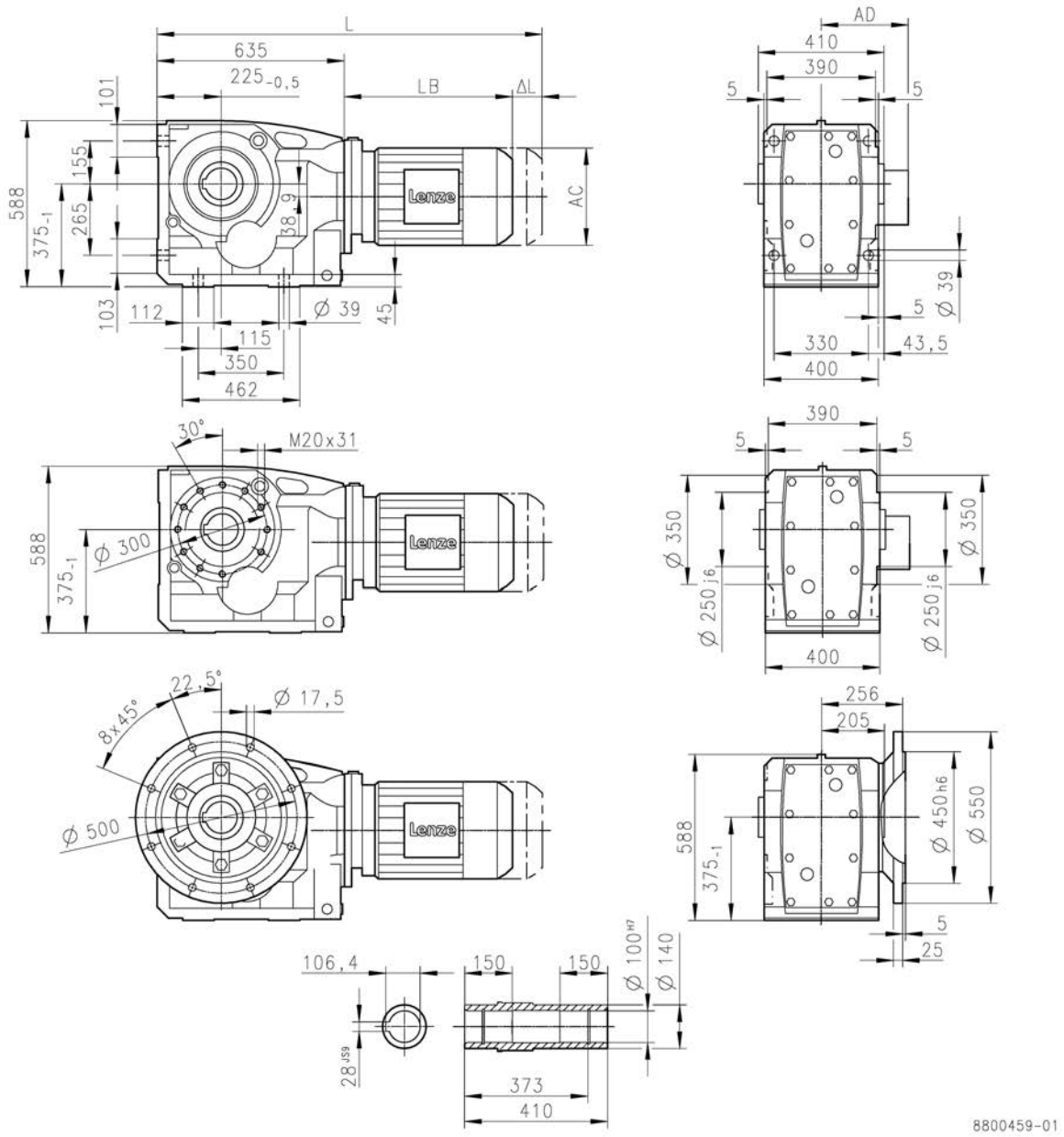

			m540					
			-P180/M4	-P180/L4	-P200/M4	-P225/M4	-P225/L4	-P250/M4
Total length	L	[mm]	1202	1232	1295	1316	1376	1427
Motor length	LB	[mm]	567	597	660	681	741	792
Length of motor options	Δ L	[mm]	274		293	787		827
Motor diameter	AC	[mm]	353		393	439		487
Distance motor/connection	AD	[mm]	292		315	337		408

L = length of the motor without built-on accessories
ΔL = additional length of the built-on accessories (longest type)

Dimensions, 4-pole motors

g500-B13000

Dimensions hollow shaft with shrink disc
Gearbox design: SBR, SAR, SAK

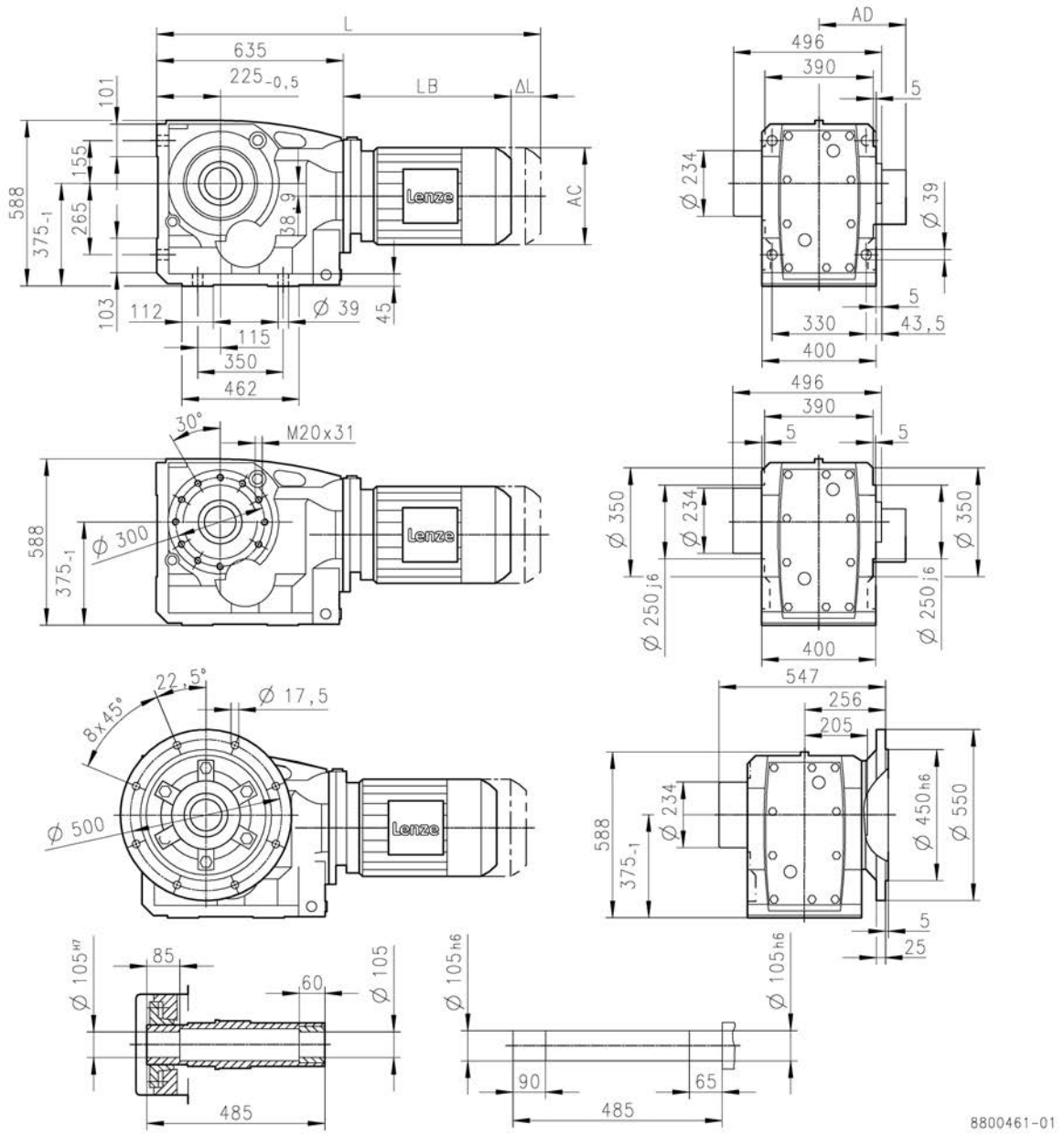

			m540						
			-P100/M4	-P100/L4	-P112/M4	-P132/M4	-P132/L4	-P160/M4	-P160/L4
Total length	L	[mm]	1026			1097		1129	1189
Motor length	LB	[mm]	391			462		494	554
Length of motor options	Δ L	[mm]	219		206	259		285	
Motor diameter	AC	[mm]	198		222	264		318	
Distance motor/connection	AD	[mm]	171		182	207		241	

L = length of the motor without built-on accessories
ΔL = additional length of the built-on accessories (longest type)

Dimensions, 4-pole motors

g500-B13000

Dimensions hollow shaft with shrink disc
Gearbox design: SBR, SAR, SAK

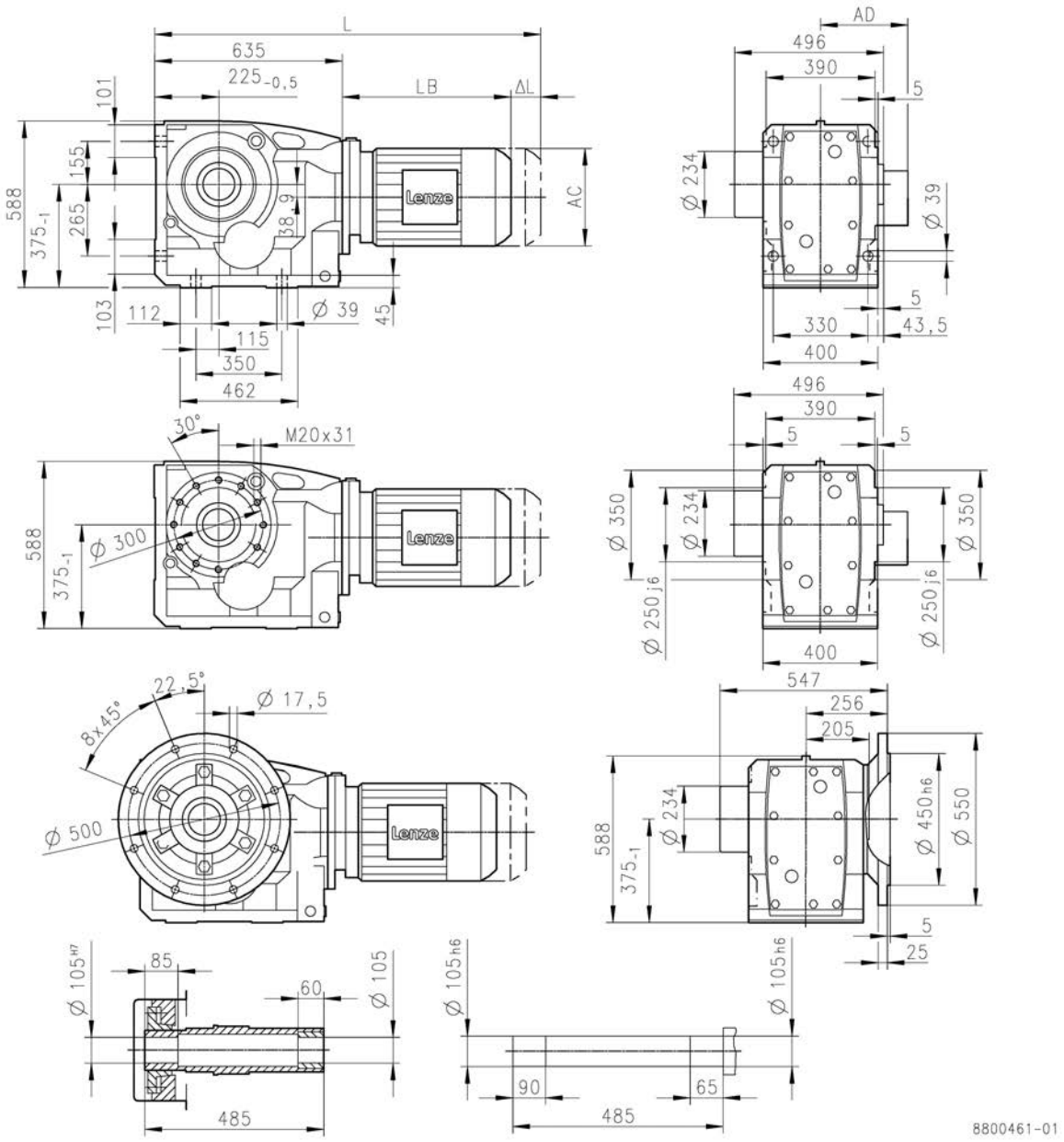

			m540					
			-P180/M4	-P180/L4	-P200/M4	-P225/M4	-P225/L4	-P250/M4
Total length	L	[mm]	1202	1232	1295	1316	1376	1427
Motor length	LB	[mm]	567	597	660	681	741	792
Length of motor options	Δ L	[mm]	274		293	787		827
Motor diameter	AC	[mm]	353		393	439		487
Distance motor/connection	AD	[mm]	292		315	337		408

L = length of the motor without built-on accessories
ΔL = additional length of the built-on accessories (longest type)

Dimensions, 4-pole motors

g500-B13000

Dimensions with solid shaft
Gearbox design: VBR, VAR, VAK

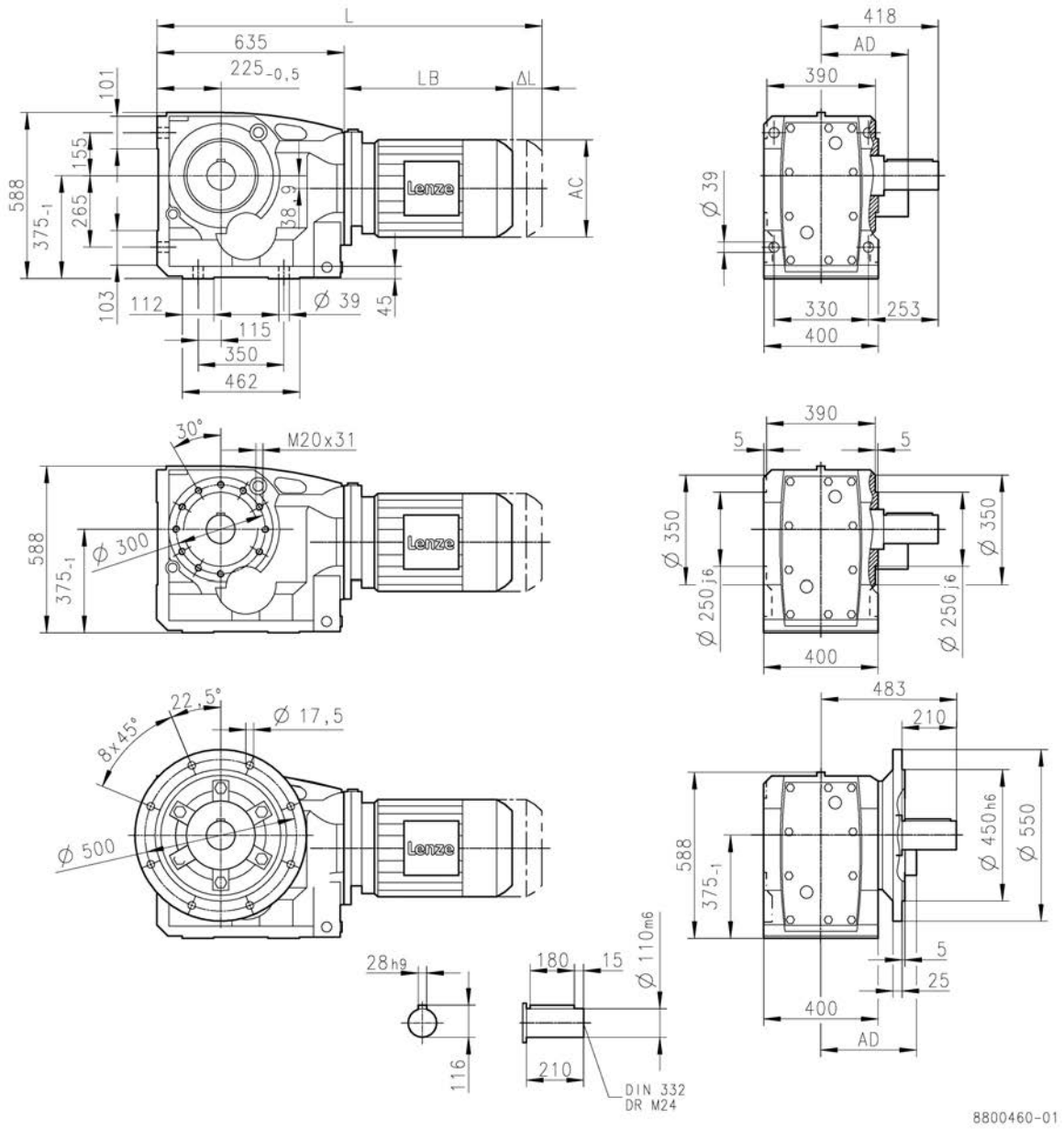

			m540						
			-P100/M4	-P100/L4	-P112/M4	-P132/M4	-P132/L4	-P160/M4	-P160/L4
Total length	L	[mm]	1026			1097		1129	1189
Motor length	LB	[mm]	391			462		494	554
Length of motor options	Δ L	[mm]	219		206	259		285	
Motor diameter	AC	[mm]	198		222	264		318	
Distance motor/connection	AD	[mm]	171		182	207		241	

L = length of the motor without built-on accessories
ΔL = additional length of the built-on accessories (longest type)

Dimensions, 4-pole motors

g500-B13000

Dimensions with solid shaft
Gearbox design: VBR, VAR, VAK

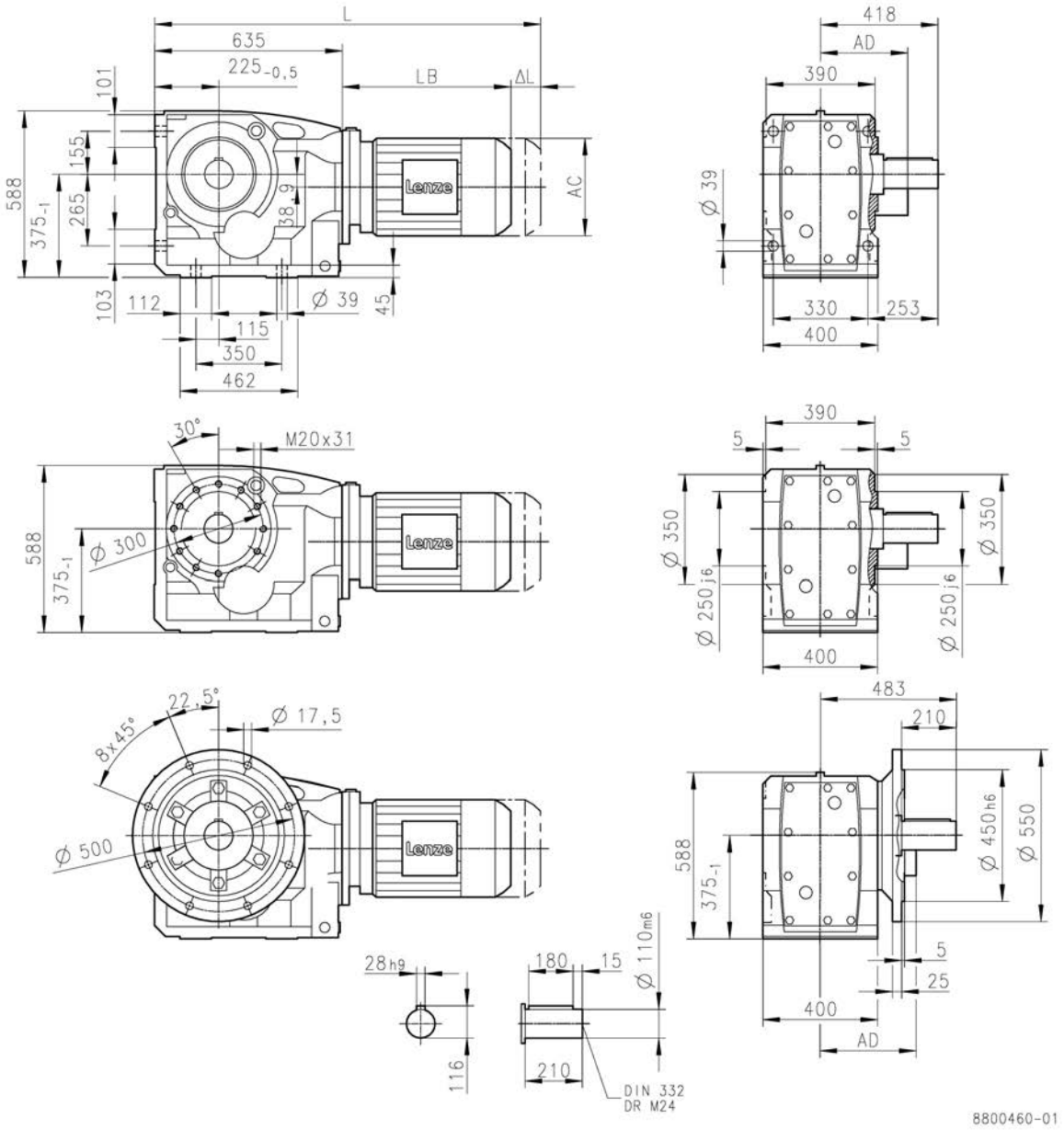

			m540					
			-P180/M4	-P180/L4	-P200/M4	-P225/M4	-P225/L4	-P250/M4
Total length	L	[mm]	1202	1232	1295	1316	1376	1427
Motor length	LB	[mm]	567	597	660	681	741	792
Length of motor options	Δ L	[mm]	274		293	787		827
Motor diameter	AC	[mm]	353		393	439		487
Distance motor/connection	AD	[mm]	292		315	337		408

L = length of the motor without built-on accessories
ΔL = additional length of the built-on accessories (longest type)

Dimensions, 4-pole motors

g500-B20000

Dimensions with hollow shaft
Gearbox design: HBR, HAR, HAK

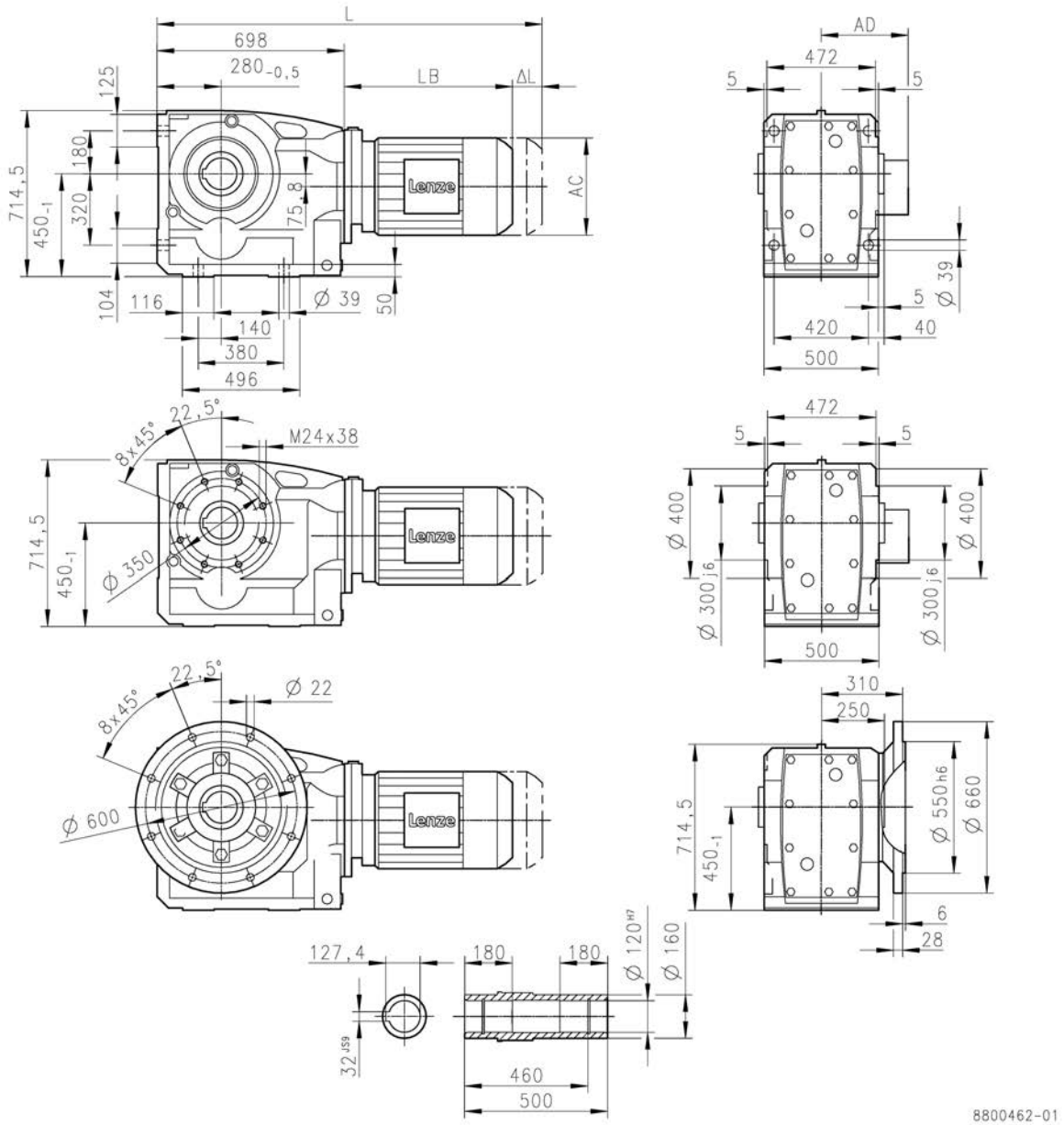

			m540						
			-P112/M4	-P132/M4	-P132/L4	-P160/M4	-P160/L4	-P180/M4	-P180/L4
Total length	L	[mm]	1077	1147		1179	1239	1252	1282
Motor length	LB	[mm]	379	449		481	541	554	584
Length of motor options	Δ L	[mm]	206	259		285		274	
Motor diameter	AC	[mm]	222	264		318		353	
Distance motor/connection	AD	[mm]	182	207		241		292	

L = length of the motor without built-on accessories
ΔL = additional length of the built-on accessories (longest type)

Dimensions, 4-pole motors

g500-B20000

Dimensions with hollow shaft
Gearbox design: HBR, HAR, HAK

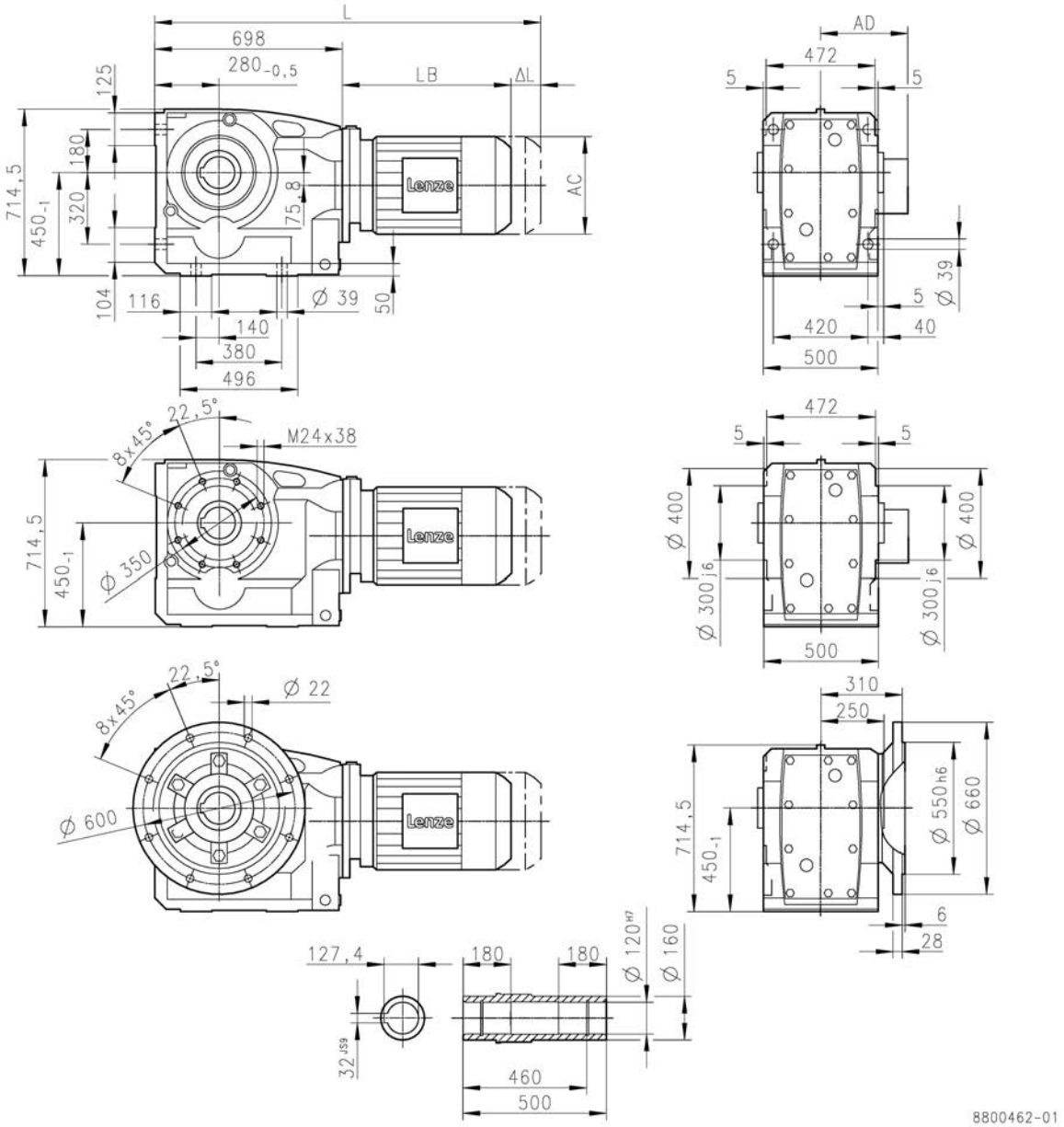

			m540		
			-P200/M4	-P225/M4	-P225/L4
Total length	L	[mm]	1345	1364	1424
Motor length	LB	[mm]	647	666	726
Length of motor options	Δ L	[mm]	293	787	
Motor diameter	AC	[mm]	393	439	
Distance motor/connection	AD	[mm]	315	337	

L = length of the motor without built-on accessories
ΔL = additional length of the built-on accessories (longest type)

Dimensions, 4-pole motors

g500-B20000

Dimensions hollow shaft with shrink disc
Gearbox design: SBR, SAR, SAK

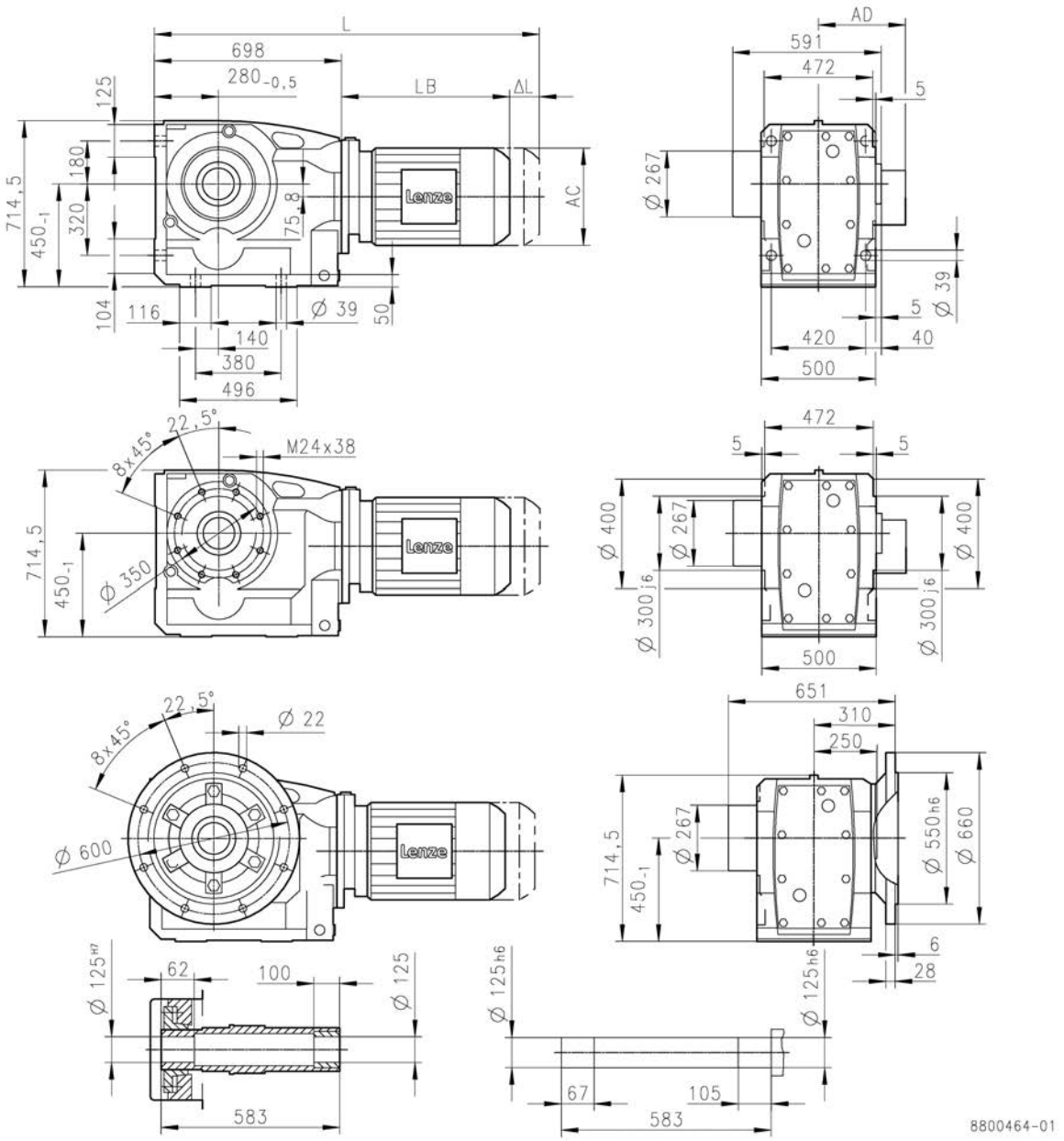

			m540						
			-P112/M4	-P132/M4	-P132/L4	-P160/M4	-P160/L4	-P180/M4	-P180/L4
Total length	L	[mm]	1077	1147		1179	1239	1252	1282
Motor length	LB	[mm]	379	449		481	541	554	584
Length of motor options	Δ L	[mm]	206	259		285		274	
Motor diameter	AC	[mm]	222	264		318		353	
Distance motor/connection	AD	[mm]	182	207		241		292	

L = length of the motor without built-on accessories
ΔL = additional length of the built-on accessories (longest type)

Dimensions, 4-pole motors

g500-B20000

Dimensions hollow shaft with shrink disc
Gearbox design: SBR, SAR, SAK

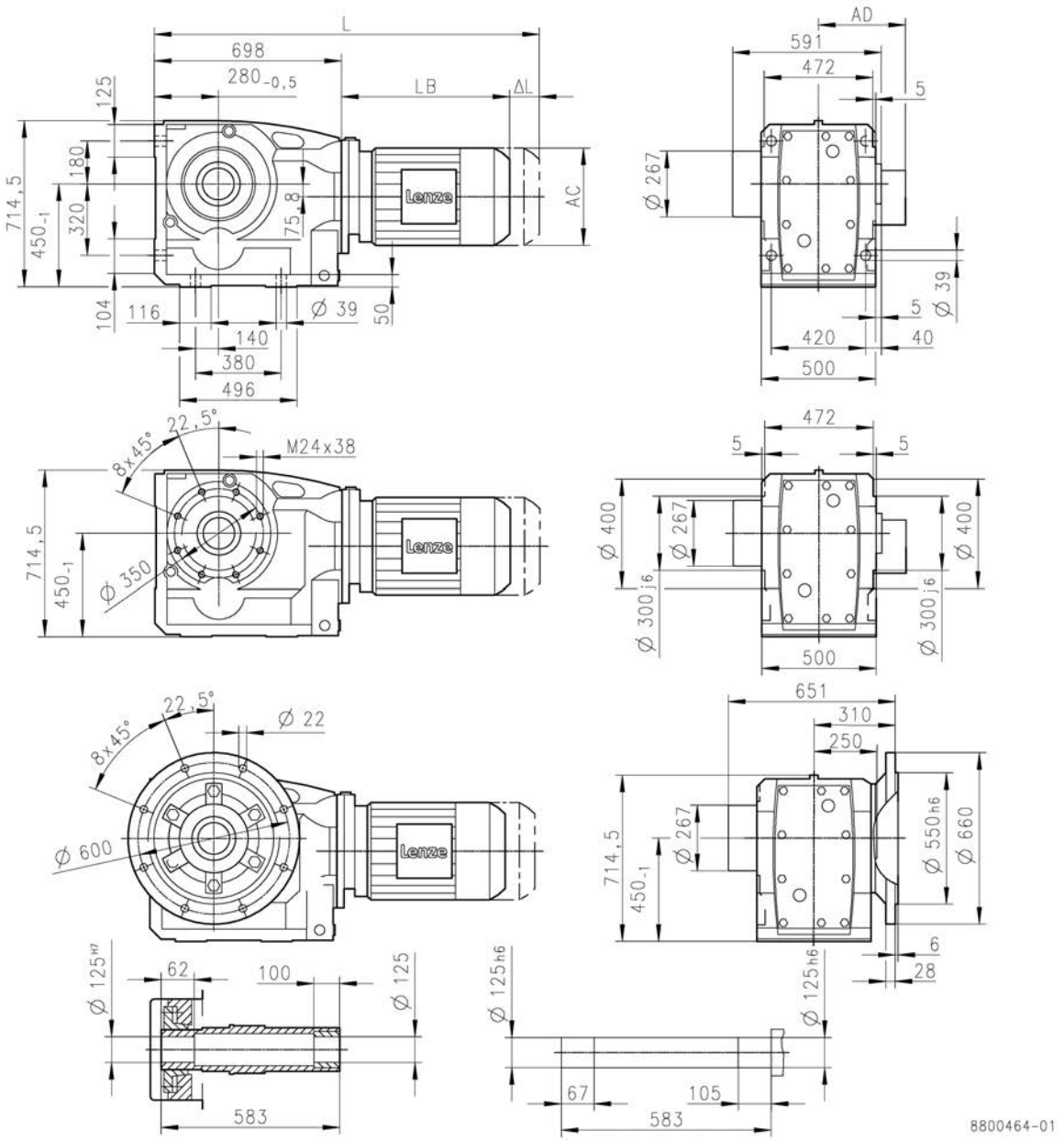

			m540		
			-P200/M4	-P225/M4	-P225/L4
Total length	L	[mm]	1345	1364	1424
Motor length	LB	[mm]	647	666	726
Length of motor options	Δ L	[mm]	293	787	
Motor diameter	AC	[mm]	393	439	
Distance motor/connection	AD	[mm]	315	337	

L = length of the motor without built-on accessories
ΔL = additional length of the built-on accessories (longest type)

Dimensions, 4-pole motors

g500-B20000

Dimensions with solid shaft
Gearbox design: VBR, VAR, VAK

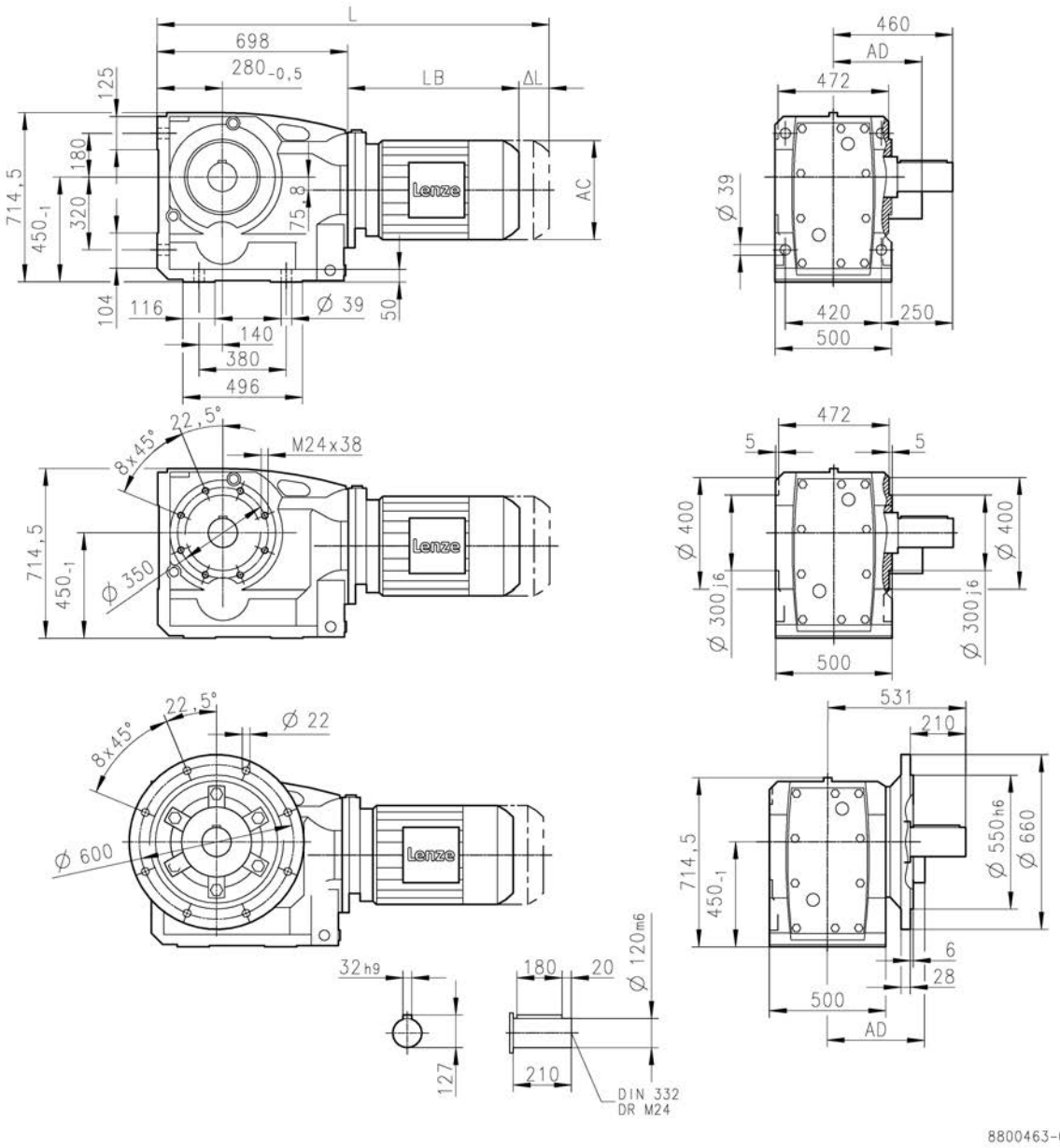

			m540						
			-P112/M4	-P132/M4	-P132/L4	-P160/M4	-P160/L4	-P180/M4	-P180/L4
Total length	L	[mm]	1077	1147		1179	1239	1252	1282
Motor length	LB	[mm]	379	449		481	541	554	584
Length of motor options	Δ L	[mm]	206	259		285		274	
Motor diameter	AC	[mm]	222	264		318		353	
Distance motor/connection	AD	[mm]	182	207		241		292	

L = length of the motor without built-on accessories
ΔL = additional length of the built-on accessories (longest type)

Dimensions, 4-pole motors

g500-B20000

Dimensions with solid shaft
Gearbox design: VBR, VAR, VAK

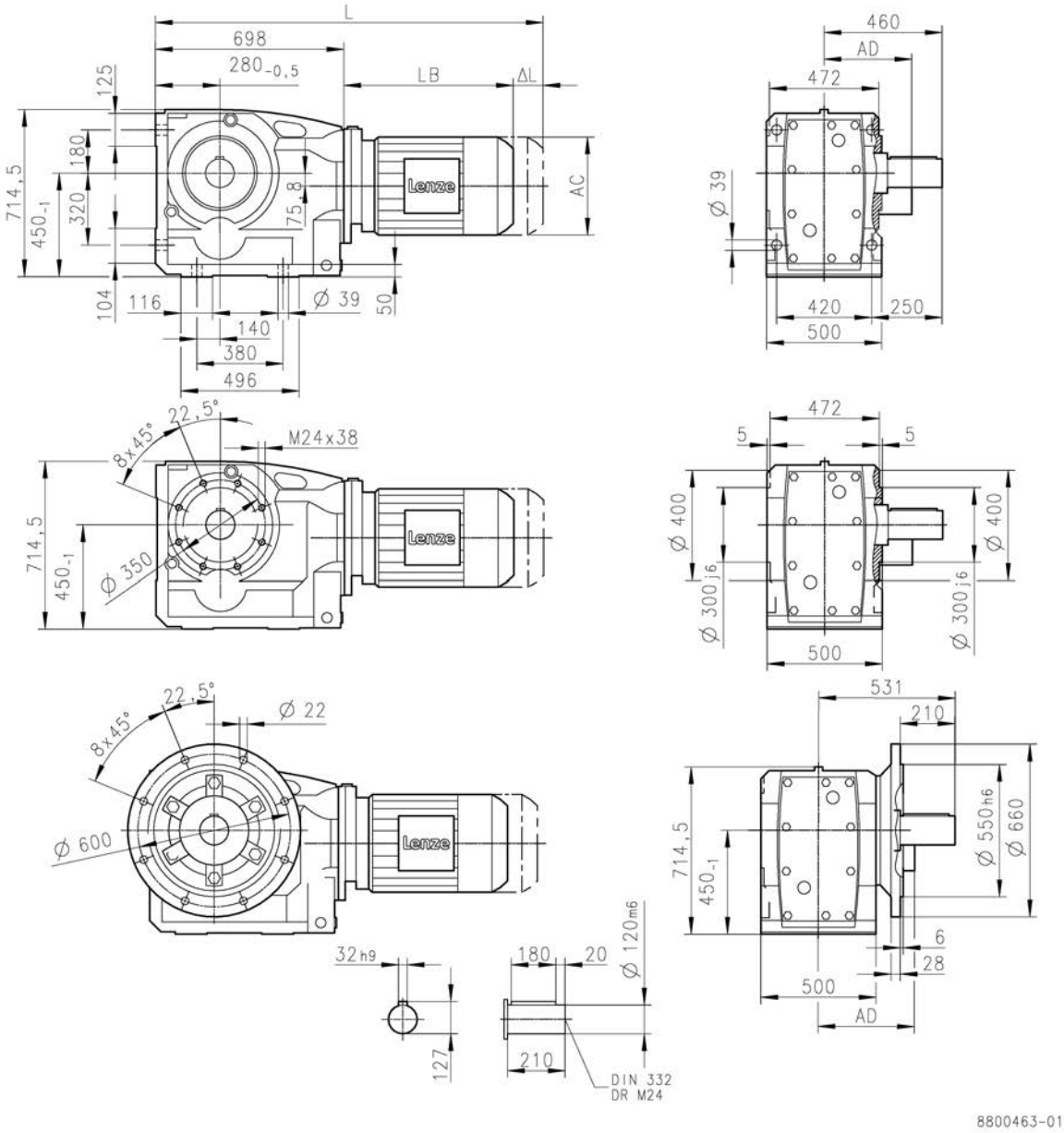

			m540		
			-P200/M4	-P225/M4	-P225/L4
Total length	L	[mm]	1345	1364	1424
Motor length	LB	[mm]	647	666	726
Length of motor options	Δ L	[mm]	293	787	
Motor diameter	AC	[mm]	393	439	
Distance motor/connection	AD	[mm]	315	337	

L = length of the motor without built-on accessories
ΔL = additional length of the built-on accessories (longest type)

Additional length of the built-on accessories

Dimensions, self-ventilated (4-pole)

Product			MD□MA□□		
			063-02 063-22	063-12 063-32 063-42	071-32 071-42
Brake					
	Δ L	[mm]	71.0	40.0	52.0
Feedback					
	Δ L	[mm]	71.0	56.0	52.0
Brake + Feedback					
	Δ L	[mm]	135	103	96.0

Product			m550						
			-P80/M4	-P90/M4 -P90/L4	-P100/M4 -P100/L4	-P112/M4	-P132/M4 -P132/L4	-P160/M4 -P160/L4	-P180/M4 -P180/L4 -P180/V4
Brake									
	Δ L	[mm]	73.0	62.0	76.0	90.0	79.0	105	103
Feedback									
	Δ L	[mm]	97.0	82.0	81.0	80.0	102	105	79.0
Brake + Feedback									
	Δ L	[mm]	110	99.0	101	120	124	191	182

Product			m540					
			-P90/L4	-P100/M4 -P100/L4	-P112/M4	-P132/M4 -P132/L4	-P160/M4 -P160/L4	-P180/M4 -P180/L4
Brake								
	Δ L	[mm]	70.0	78.5	73.0	105	116	129
Feedback								
	Δ L	[mm]	92.5	93.5	95.0			
Brake + Feedback								
	Δ L	[mm]	163	172	168	200	211	224

Product			m540		
			-P200/M4	-P225/M4 -P225/L4	-P250/M4
Brake					
	Δ L	[mm]	147	239	225
Feedback					
	Δ L	[mm]	95.0	125	
Brake + Feedback					
	Δ L	[mm]	242	364	

Additional length of the built-on accessories

Dimensions, forced ventilated (4-pole)

Product			MD□MA□□	
			063-12 063-32 063-42	071-32 071-42
Brake				
	Δ L	[mm]	128	
Feedback				
	Δ L	[mm]	170	165
Brake + Feedback				
	Δ L	[mm]	128	

Product			m550						
			-P80/M4	-P90/M4 -P90/L4	-P100/M4 -P100/L4	-P112/M4	-P132/M4 -P132/L4	-P160/M4 -P160/L4	-P180/M4 -P180/L4 -P180/V4
Brake									
	Δ L	[mm]	183	175	170	183	201	179	207
Feedback									
	Δ L	[mm]	127	122	109	183	201	237	207
Brake + Feedback									
	Δ L	[mm]	183	175	170	183	201	237	267

Product			m540					
			-P90/L4	-P100/M4 -P100/L4	-P112/M4	-P132/M4 -P132/L4	-P160/M4 -P160/L4	-P180/M4 -P180/L4
Brake								
	Δ L	[mm]	120	122	113	165	191	199
Feedback								
	Δ L	[mm]	213	219	206	259	285	274
Brake + Feedback								
	Δ L	[mm]	213	219	206	259	285	274

Product			m540		
			-P200/M4	-P225/M4 -P225/L4	-P250/M4
Brake					
	Δ L	[mm]	233		
Feedback					
	Δ L	[mm]	293	787	827
Brake + Feedback					
	Δ L	[mm]	293		

Weights, 4-pole motors

► Weights with oil capacity for mounting position A, all given as approximate values.
The weights refer to the basic version, observe additional weights!

2-stage gearboxes

Product		Mass
		m
		[kg]
g500-B45	MD□MA□□063-02	6.70
	MD□MA□□063-12	7.30
	MD□MA□□063-22	6.70
	MD□MA□□063-32	7.30
	MD□MA□□063-42	7.60
	MD□MA□□071-32	9.00
	MD□MA□□071-42	9.60
g500-B110	MD□MA□□063-12	8.90
	MD□MA□□063-32	
	MD□MA□□063-42	9.20
	MD□MA□□071-32	10.6
	MD□MA□□071-42	11.2
	m550-P80/M4	19.7

Product		Mass
		m
		[kg]
g500-B110	m550-P90/M4	24.7
	m550-P90/L4	25.7
g500-B240	MD□MA□□063-12	13.2
	MD□MA□□063-32	
	MD□MA□□063-42	13.5
	MD□MA□□071-32	14.9
	MD□MA□□071-42	15.5
	m550-P80/M4	24.0
	m550-P90/M4	29.0
	m550-P90/L4	30.0
	m550-P100/M4	40.0
	m550-P100/L4	42.0

3-stage gearboxes

Product		Mass
		m
		[kg]
g500-B240	MD□MA□□063-12	13.4
	MD□MA□□063-32	
	MD□MA□□063-42	13.7
	MD□MA□□071-32	15.1
	MD□MA□□071-42	15.7
g500-B450	MD□MA□□063-12	16.4
	MD□MA□□063-32	
	MD□MA□□063-42	16.7
	MD□MA□□071-32	18.1
	MD□MA□□071-42	18.7
	m550-P80/M4	27.2
	m550-P90/M4	32.2
	m550-P90/L4	33.2
	m550-P100/M4	43.2
	m550-P100/L4	45.2
	m550-P112/M4	48.2
	m550-P132/M4	69.2
	m550-P132/L4	81.2
g500-B600	MD□MA□□063-42	34.8
	MD□MA□□071-32	36.2
	MD□MA□□071-42	36.8
	m550-P80/M4	45.3

Product		Mass
		m
		[kg]
g500-B600	m550-P90/M4	50.3
	m550-P90/L4	51.3
	m550-P100/M4	61.3
	m550-P100/L4	63.3
	m550-P112/M4	66.3
	m550-P132/M4	87.3
	m550-P132/L4	99.3
g500-B820	MD□MA□□063-42	39.9
	MD□MA□□071-32	41.3
	MD□MA□□071-42	41.9
	m550-P80/M4	50.4
	m550-P90/M4	55.4
	m550-P90/L4	56.4
	m550-P100/M4	66.4
	m550-P100/L4	68.4
	m550-P112/M4	71.4
	m550-P132/M4	92.4
	m550-P132/L4	104
g500-B1500	MD□MA□□071-42	72.2
	m550-P80/M4	80.7
	m550-P90/M4	85.7
	m550-P90/L4	86.7

Weights, 4-pole motors

► Weights with oil capacity for mounting position A, all given as approximate values.
The weights refer to the basic version, observe additional weights!

3-stage gearboxes

Product		Mass
		m
		[kg]
g500-B1500	m550-P100/M4	96.7
	m550-P100/L4	98.7
	m550-P112/M4	102
	m550-P132/M4	123
	m550-P132/L4	135
	m550-P160/M4	174
	m550-P160/L4	185
g500-B2700	m550-P90/M4	127
	m550-P90/L4	128
	m550-P100/M4	138
	m550-P100/L4	140
	m550-P112/M4	143
	m550-P132/M4	164
	m550-P132/L4	176
	m550-P160/M4	215
	m550-P160/L4	226
g500-B4300	m550-P90/M4	189
	m550-P90/L4	190
	m550-P100/M4	200
	m550-P100/L4	202
	m550-P112/M4	205
	m550-P132/M4	226
	m550-P132/L4	238
	m550-P160/M4	277
	m550-P160/L4	288
	m550-P180/M4	326
	m550-P180/L4	
	m550-P180/V4	354
g500-B8000	m540-P90/L4	257
	m540-P100/M4	271
	m540-P100/L4	
	m540-P112/M4	
	m540-P132/M4	299
	m540-P132/L4	
	m540-P160/M4	315
	m540-P160/L4	332
	m540-P180/M4	407
	m540-P180/L4	412

Product		Mass
		m
		[kg]
g500-B8000	m540-P200/M4	482
	m540-P225/M4	527
	m540-P225/L4	562
	m540-P250/M4	662
g500-B13000	m540-P100/M4	457
	m540-P100/L4	
	m540-P112/M4	
	m540-P132/M4	485
	m540-P132/L4	
	m540-P160/M4	501
	m540-P160/L4	518
	m540-P180/M4	593
	m540-P180/L4	598
	m540-P200/M4	668
	m540-P225/M4	713
	m540-P225/L4	748
	m540-P250/M4	848
g500-B20000	m540-P112/M4	707
	m540-P132/M4	735
	m540-P132/L4	
	m540-P160/M4	751
	m540-P160/L4	768
	m540-P180/M4	843
	m540-P180/L4	848
	m540-P200/M4	918
	m540-P225/M4	963
	m540-P225/L4	998

Additional weights for gearboxes

Product			g500-B45	g500-B110	g500-B240	g500-B450	g500-B600	g500-B820
Mass								
Solid shaft	m	[kg]	0.4	0.5	1.4	1.0	1.5	1.9
Shrink disc	m	[kg]	0.2	0.2	0.7	0.6	0.6	1.2
Flange	m	[kg]	0.3	0.4	0.7	0.9	6.1	6.1

Product			g500-B1500	g500-B2700	g500-B4300	g500-B8000	g500-B13000	g500-B20000
Mass								
Solid shaft	m	[kg]	3.7	6.0	15.5	22.0	55.0	56.0
Shrink disc	m	[kg]	1.7	2.3	4.3	6.2	18.0	15.0
Foot	m	[kg]				8.0		
Flange	m	[kg]	11.5	15.0	29.0	75.0	71.0	116.0

Additional weights for motors

4-pole motors

Product			MD□MA□□		
			063-02 063-22	063-12 063-32 063-42	071-32 071-42
Brake			06		06 08
	m	[kg]	0.9		0.9 1.5
Blower					
	m	[kg]		2.0	2.1

Product			m550						
			-P80/M4	-P90/M4 -P90/L4	-P100/M4 -P100/L4	-P112/M4	-P132/M4 -P132/L4	-P160/M4 -P160/L4	-P180/M4 -P180/L4 -P180/V4
Brake			08 10		10 12	12 14	14 16	16 18	18 20
	m	[kg]	1.5 2.6		2.6 4.2	4.2 5.8	5.8 8.7	8.7 12.6	12.6 19.5
Blower									
	m	[kg]	2.3	2.7	3.0	3.1	5.0	7.3	10.3

Additional weights for motors

4-pole motors

Product			m540				
			-P90/L4	-P100/M4 -P100/L4	-P112/M4	-P132/M4 -P132/L4	-P160/M4 -P160/L4
Brake			08E 10E 12E	10E 12E 14E	12E 14E	16E 18E	20E 18E
	m	[kg]	1.5 2.6 4.2	2.6 4.2 5.8	4.2 5.8	8.7 12.6	12.6 12.6
Blower							
	m	[kg]	1.9	2.1	2.2	3.0	4.2

Product			m540			
			-P180/M4 -P180/L4	-P200/M4	-P225/M4 -P225/L4	-P250/M4
Brake			20E	20E 25E	25E 30E	30E 40E
	m	[kg]	12.6	12.6 31.0	31.0 45.0	45.0 80.0
Blower						
	m	[kg]	8.2	9.8	22.0	

Overview

Torque plate

The torque is usually supported via the foot or the flange.
Another simple option are the attachable torque plates. Here, the torque is supported only via one point and is, among other things, suitable for shaft-mounted gearboxes. The supplied rubber buffers provide for a low-tension installation and absorb slight shocks.
The torque plates are available in two versions, for being installed at the existing threaded pitch circle or for the foot at the gearbox.

In addition, torque support for the g500-B45 gearbox can be effected via the holding fixture of the housing, which is integrated on both sides, by means of a rubber buffer.
The rubber buffers can be ordered optionally.

Torque plate on threaded pitch circle	Torque plate at housing foot
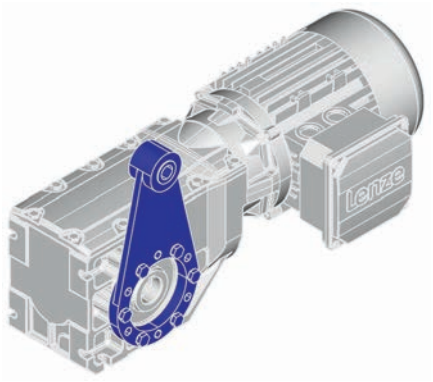	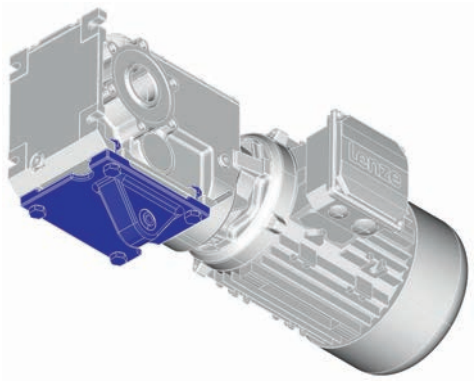

Rubber buffer for torque plate

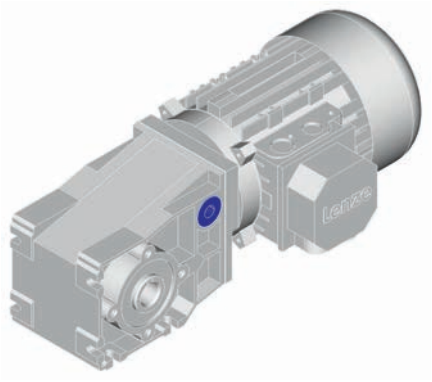

Overview

Shaft cover

The hoseproof hollow shaft cover protects the hollow shaft from objects falling in. It is sealed by a flat gasket between cover and housing. Thus, the hollow shaft is protected from dust and water jets.

The cover is loosely enclosed and can be mounted on both sides of the hollow shaft bore.

The optional shrink disc cover is provided for the shrink disc to be protected from contact.

Hoseproof hollow shaft cover	Shrink disc cover
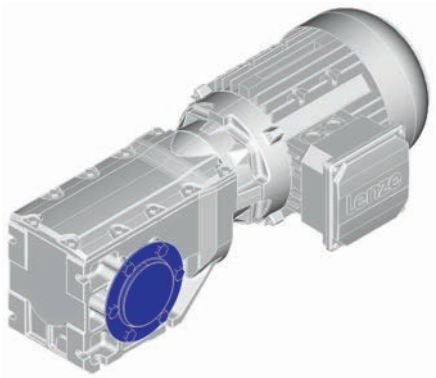	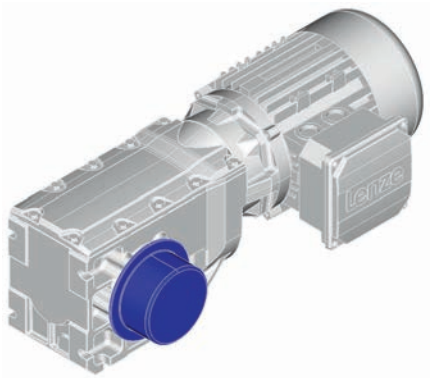

Torque plate

Torque plate on threaded pitch circle

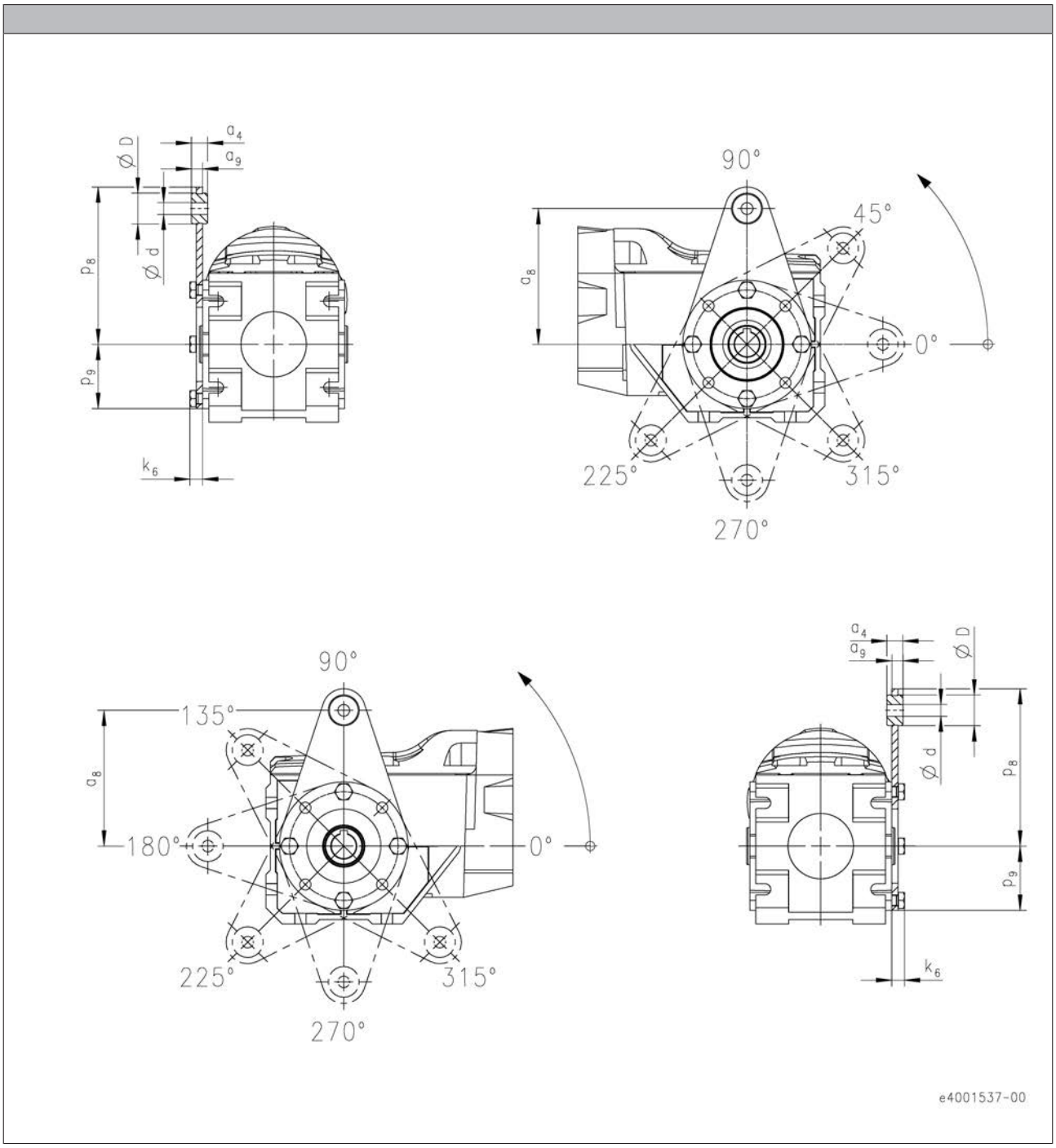

Product	Dimensions								Mass
	a_4	a_8	a_9	d	D	p_8	p_9	k_6	m
	[mm]	[mm]	[mm]	[mm]	[mm]	[mm]	[mm]	[mm]	[kg]
g500-B45	12.0	100	8.0	8.0	20.0	115	42.0	9.0	0.3
g500-B110	13.0	110	9.0	10.0	25.0	128	54.0	11.0	0.5

Torque plate

Torque plate on threaded pitch circle

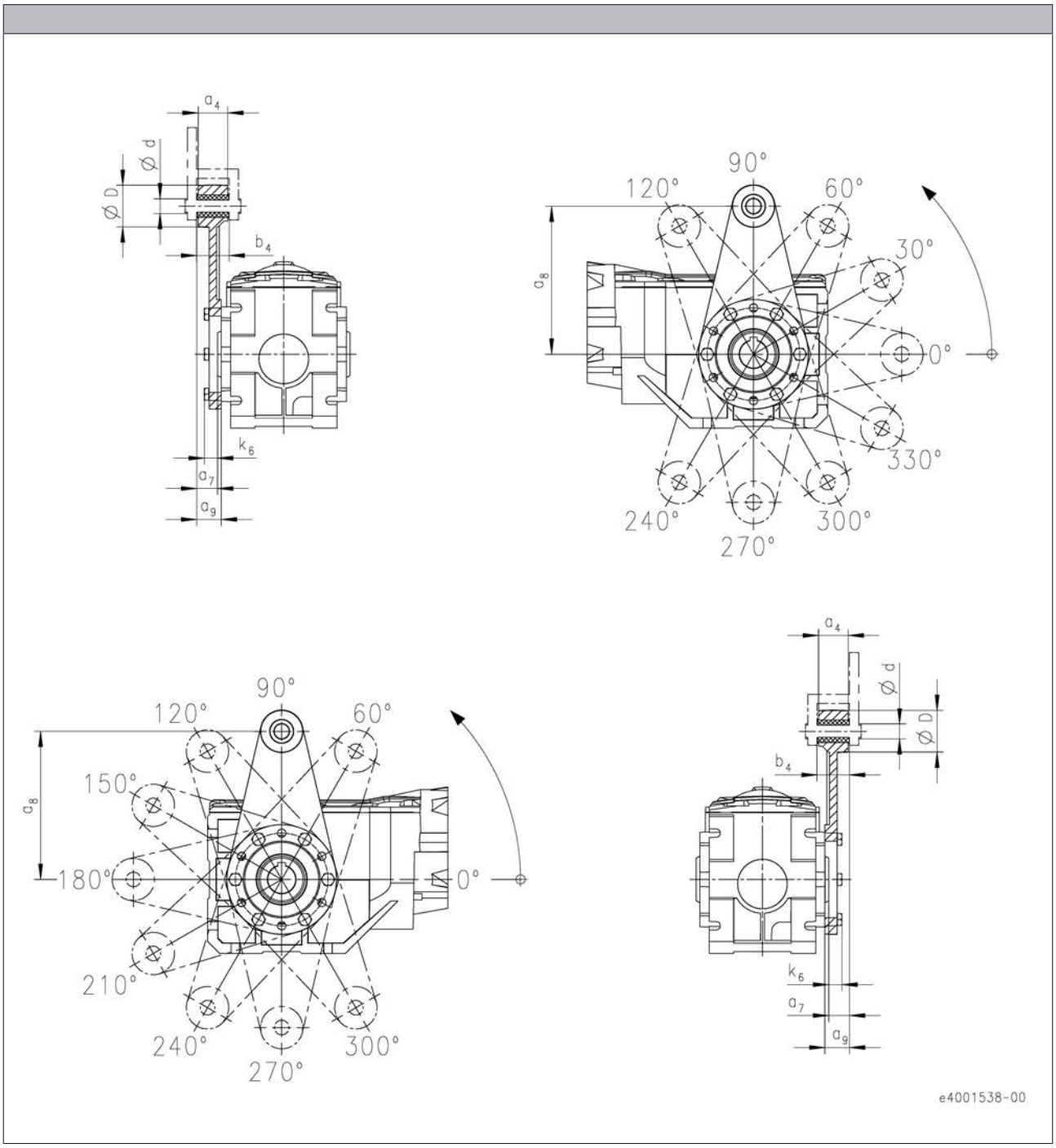

Product	Dimensions								Mass
	a_4	a_7	a_8	a_9	b_4	d	D	k_6	m
	[mm]	[mm]	[mm]	[mm]	[mm]	[mm]	[mm]	[mm]	[kg]
g500-B240	34.0	23.5	160	27.5	38.5	16.0	45.0	15.0	1.3
g500-B450	40.0	29.0	200	32.0	44.5	20.0	50.0	18.0	2.5
g500-B600	38.0	26.5	200	31.5	40.0	20.0	50.0	19.0	2.5

Torque plate

Torque plate on threaded pitch circle

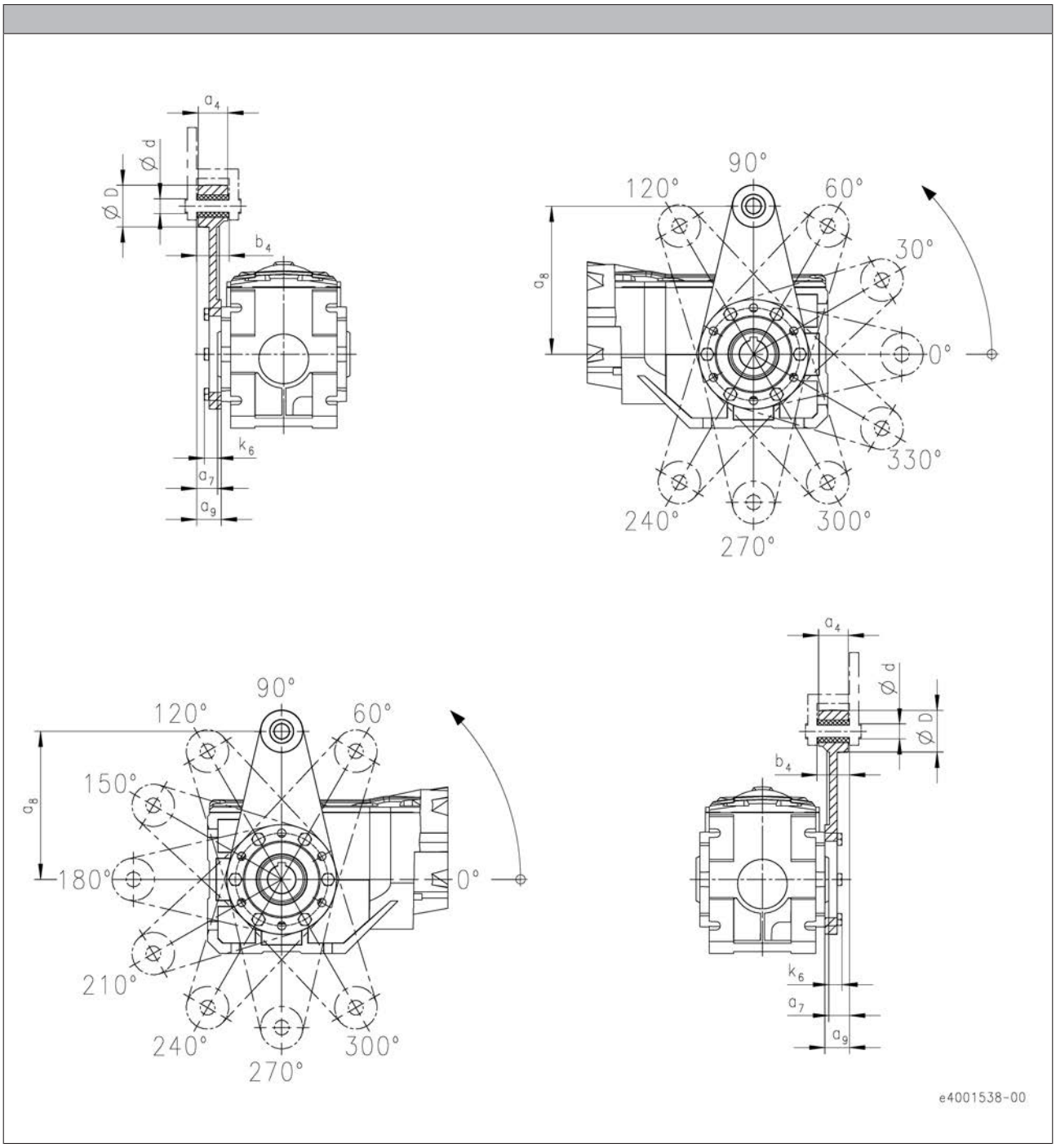

Product	Dimensions								Mass
	a_4	a_7	a_8	a_9	b_4	d	D	k_6	m
	[mm]	[mm]	[mm]	[mm]	[mm]	[mm]	[mm]	[mm]	[kg]
g500-B820	38.0	28.0	200	31.5	40.0	20.0	50.0	20.5	2.5
g500-B1500	44.0	32.0	250	36.0	46.0	25.0	65.0	24.0	4.5

Torque plate

Torque plate at housing foot

g500-B240

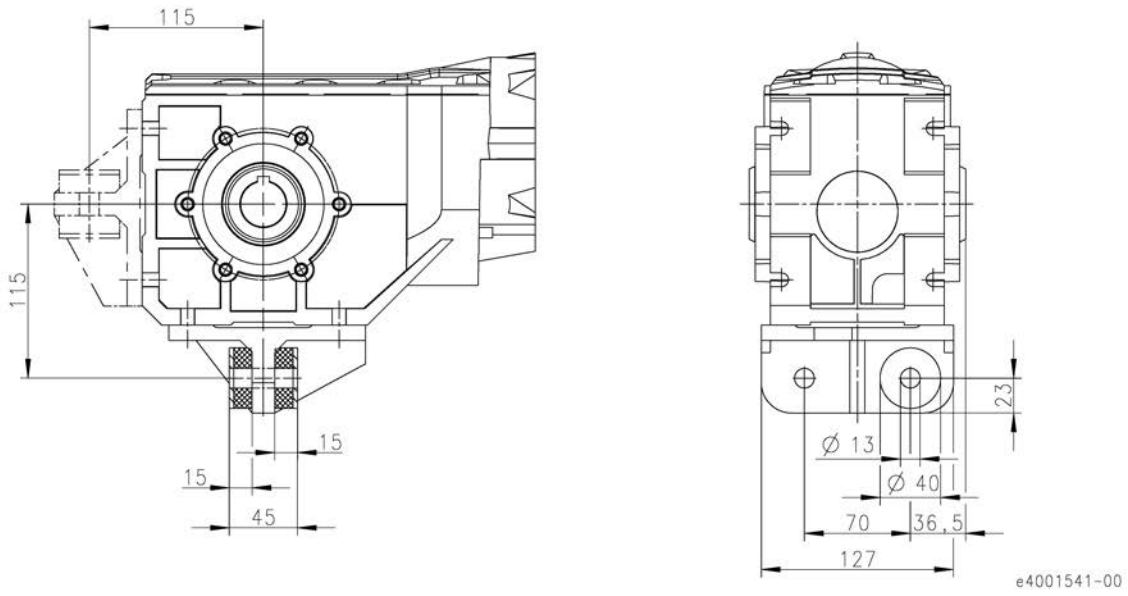

g500-B450

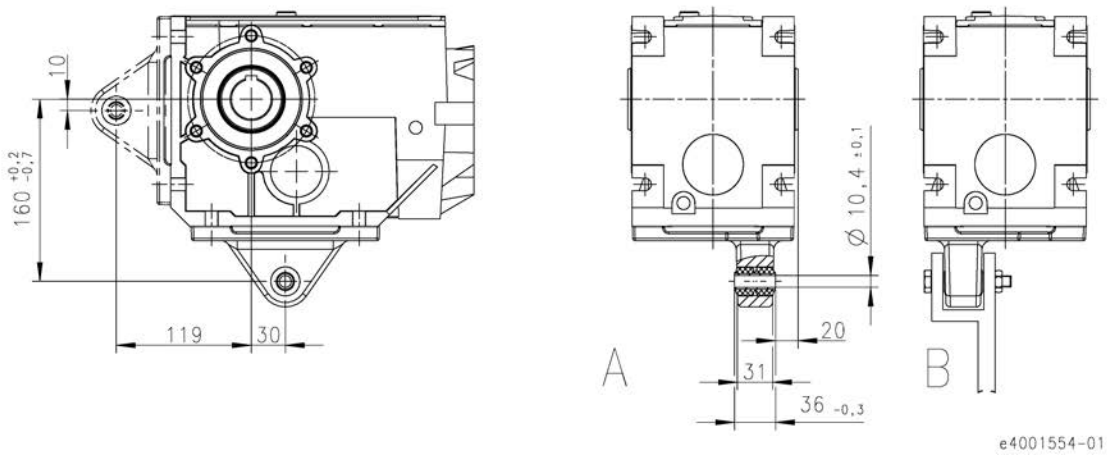

Product	Mass
	m
	[kg]
g500-B240	2.4
g500-B450	1.1

Torque plate

Torque plate at housing foot

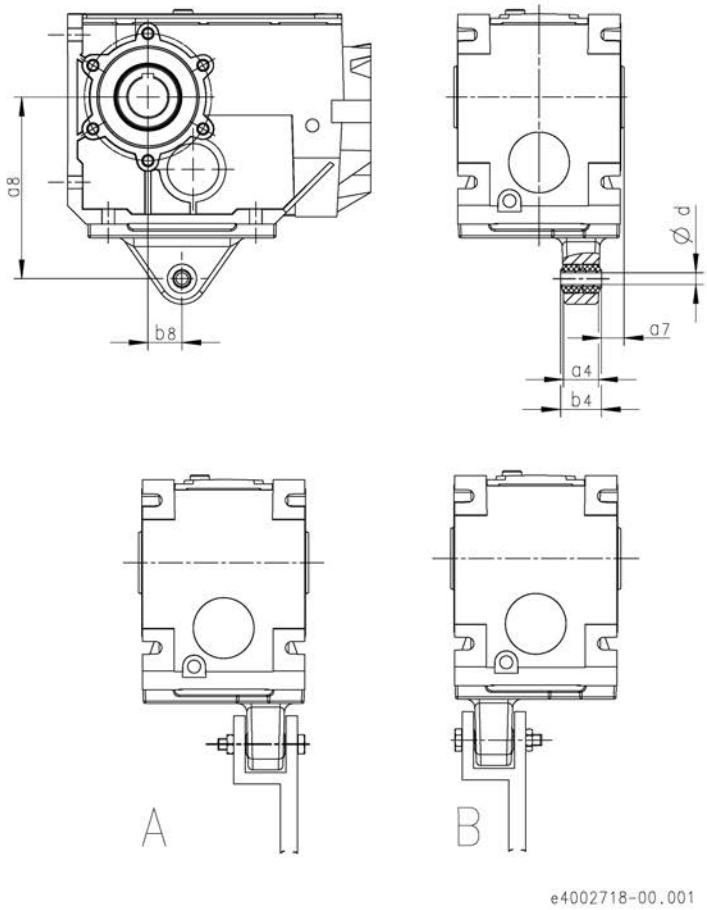

Product	Dimensions						Mass
	d	a_8	b_8	a_4	b_4	a_7	m
	[mm]	[mm]	[mm]	[mm]	[mm]	[mm]	[kg]
g500-B600	16.4	192	40.0	55.0	60.0	18.0	2.8
g500-B820	16.4	200	45.0	55.0	60.0	25.0	3.0
g500-B1500	16.4	250	52.5	55.0	60.0	25.0	4.3
g500-B2700	25.0	300	60.0	72.0	80.0	30.0	10.0
g500-B4300	25.0	350	70.0	92.0	100	40.0	13.0
g500-B8000	25.0	450	74.0	50.0	56.0	77.0	15.0
g500-B13000	40.0	550	60.0	80.0	88.0	7.00	25.0
g500-B20000	40.0	700	50.0	80.0	88.0	1.25	64.0

Torque plate

Rubber buffer for torque plate

g500-B45
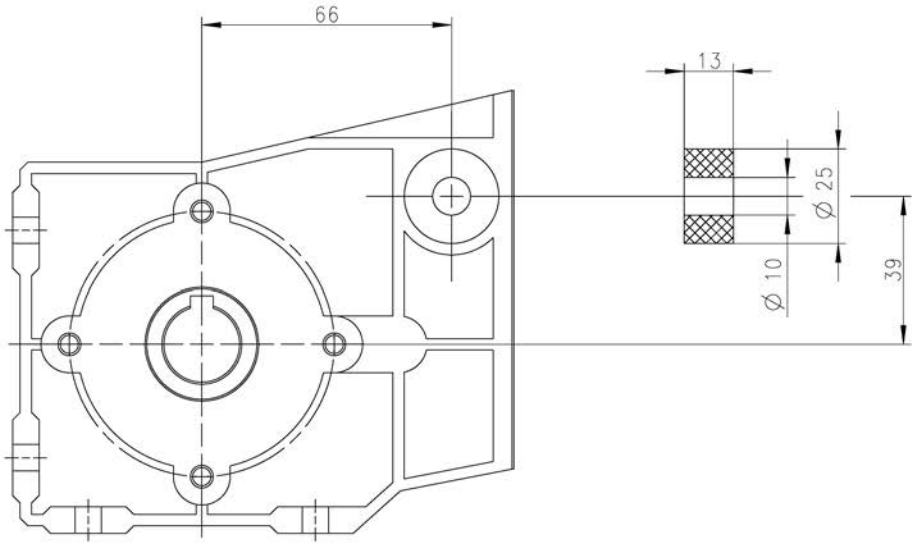

Shaft cover

Hoseproof hollow shaft cover

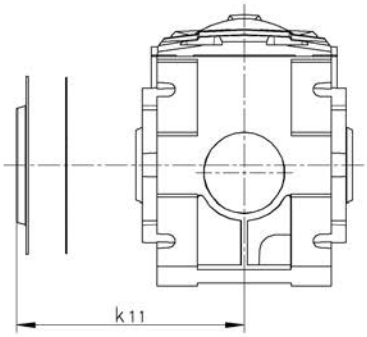

Product	Dimensions	Mass
	k_{11}	m
	[mm]	[kg]
g500-B45	55.0	0.1
g500-B110	65.0	0.1
g500-B240	75.0	0.1
g500-B450	79.5	0.2
g500-B600	90.0	0.3
g500-B820	97.0	0.3
g500-B1500	113	0.6
g500-B2700	131	0.6
g500-B4300	161	0.8
g500-B8000	250	0.5
g500-B13000	313	0.6
g500-B20000	372	0.9

Shaft cover

Shrink disc cover

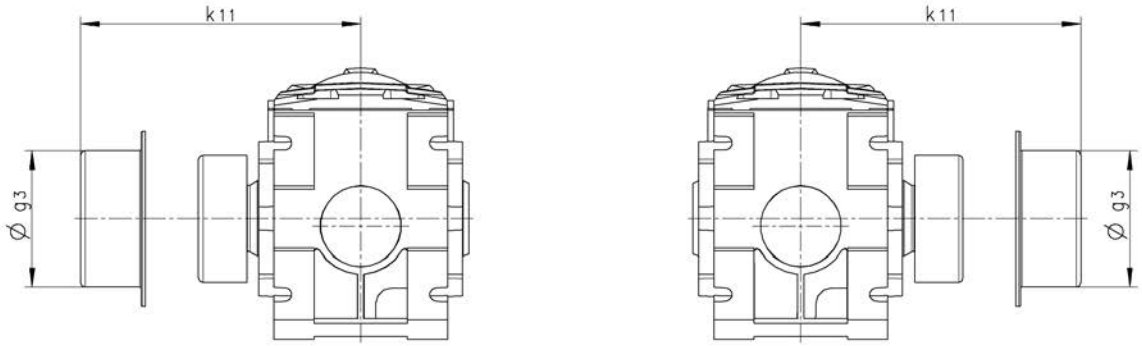

Product	Dimensions		Mass
	g_3	k_{11}	m
	[mm]	[mm]	[kg]
g500-B45	65.0	87.5	0.1
g500-B110	79.0	97.5	0.1
g500-B240	90.0	111	0.1
g500-B450	90.0	108	0.1
g500-B600	110	124	0.1
g500-B820	110	131	0.1
g500-B1500	128	148	0.2
g500-B2700	155	171	0.3
g500-B4300	188	205	0.4
g500-B8000	218	250	0.5
g500-B13000	258	313	0.6
g500-B20000	310	372	0.9

Gearbox code

Example		G	50	A	B	045	M	H	B	R	2	C	1A
Meaning	**Variant**												
Product family		G	50										
Generation				A									
				B									
Gearbox type	Bevel gearbox				B								
Output torque	45 Nm					045							
	110 Nm					111							
	240 Nm					124							
	450 Nm					145							
	600 Nm					160							
	820 Nm					182							
	1500 Nm					215							
	2700 Nm					227							
	4300 Nm					243							
	8000 Nm					280							
	13000 Nm					313							
	20000 Nm					320							
Type of construction	Geared motor						M						
	Gearboxes						N						
Shaft type	Solid shaft with feather key							V					
	Hollow shaft with keyway							H					
	Hollow shaft with shrink disc							S					
Housing type	Foot mounting + centering								A				
	Foot mounting								B				
	Centering								C				
Flange mounting	Without flange									R			
	Flange with through holes									k			
Number of stages	2-stage										2		
	3-stage										3		
Motor mounting	Integrated											C	
	IEC motor											N	
	NEMA motor											A	
	Servo motor											S	
Drive size													1A ... □H

Motor code

Example	M	D	E	MA	XX	063	-	4	2	C1	C

Meaning	Variant	Motor code										
Product family		M										
Efficiency class	IE1		D									
Cooling	Natural ventilation			S								
	Integral fan			E								
	Blower			F								
Internal key					MA							
Built-on accessories	Without built-on accessories					XX						
	Brake					BR						
	Brake + resolver					BS						
	Brake + incremental encoder					BI						
	Brake + SinCos absolute value encoder					BA						
	Resolver					RS						
	Incremental encoder					IG						
	SinCos absolute value encoder					AG						
Size							063					
							071					
Overall length								-	0			
									1			
									2			
									3			
									4			
Number of pole pairs	4-pole motors									2		
	2-pole motors									1		
Internal key											C1	
Approval	CE											C
	cURus											U
	CCC											3

Motor code

Example		M	55	A	P	080	M	04	5	E	0	0	W	T

Meaning	Variant	Motor code												
Product family		M	54											
			55											
Generation				A										
Efficiency class	Premium - IE3				P									
Size						080								
						090								
						100								
						112								
						132								
						160								
						180								
						200								
						225								
						250								
Overall length	Medium						M							
	Long						L							
	Very long						V							
Number of poles	4-pole							04						
Degree of protection	IP5□								5					
	IP6□								6					
Cooling	Integral fan									E				
	Blower									F				
Brake attachment	Without brake										0			
	Spring-applied brake										F			
Actual value encoder	Without encoder											0		
	Resolver											R		
	Absolute value encoder											A		
	Incremental encoder											E		
Approval	CE												C	
	CE, CCC												3	
	CE, cURus												U	
	CE, cURus, CCC												W	
Design type	Internal key													M
														T

Motor data

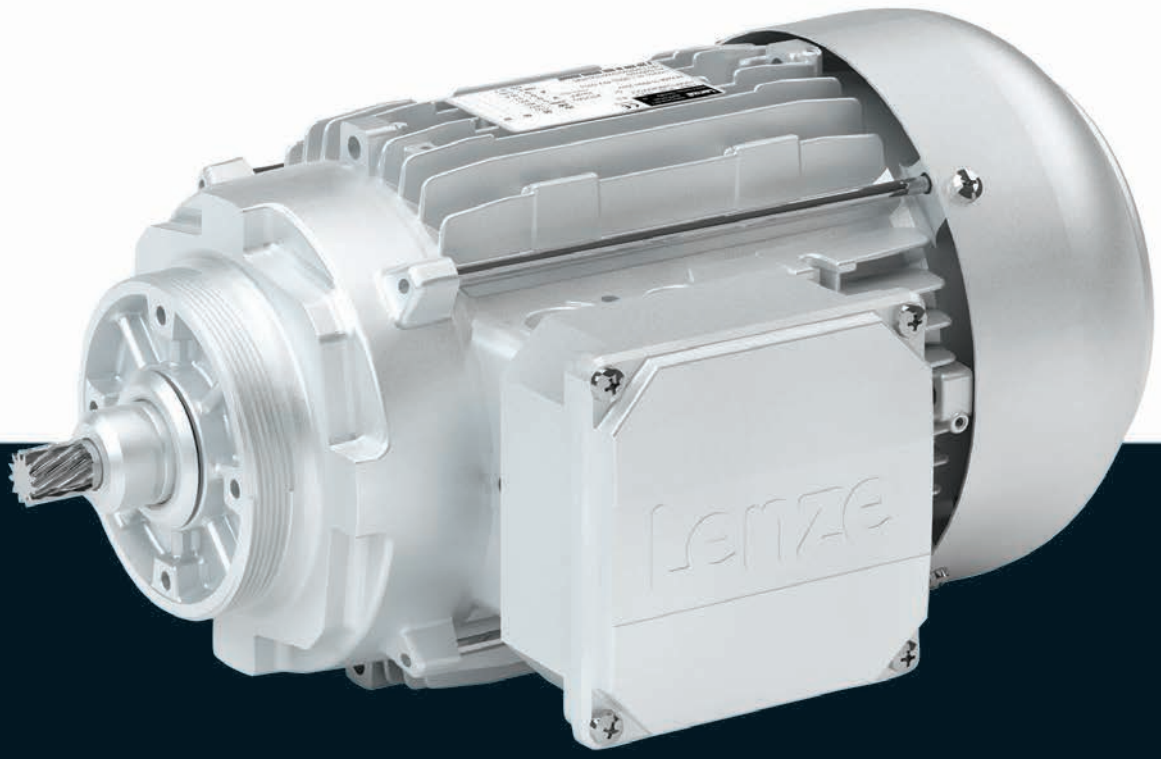

Motor data

Contents

Motor data MD	Technical data	Rated data for 50 Hz	6.6 - 4
		Rated data for 87 Hz	6.6 - 5
		Motor – inverter assignment	6.6 - 6
		Dimensions, 8400 motec inverter	6.6 - 7
	Product extensions	Motor connection	6.6 - 9
		Connection via terminal box	6.6 - 12
		Connections via ICN connectors	6.6 - 15
		Connection via ICN M12 connector	6.6 - 20
		Connections via HAN connectors	6.6 - 21
		Spring-applied brake	6.6 - 24
		Feedback	6.6 - 33
		Blower	6.6 - 35
		Temperature monitoring	6.6 - 37
Motor data m550	Technical data	Rated data for 50 Hz	6.6 - 39
		Rated data for 87 Hz	6.6 - 40
		Motor – inverter assignment	6.6 - 41
		Dimensions, 8400 motec inverter	6.6 - 42
	Product extensions	Motor connection	6.6 - 43
		Connection via terminal box	6.6 - 46
		Connections via ICN connectors	6.6 - 50
		Connection via ICN M12 connector	6.6 - 55
		Connections via HAN connectors	6.6 - 56
		Spring-applied brake	6.6 - 59
		Feedback	6.6 - 71
		Blower	6.6 - 73
		Temperature monitoring	6.6 - 75
Motor data m540	Technical data	Rated data for 50 Hz	6.6 - 77
		Rated data for 87 Hz	6.6 - 78
		Motor – inverter assignment	6.6 - 79
	Product extensions	Motor connection	6.6 - 81
		Connection via terminal box	6.6 - 84
		Connections via HAN connectors	6.6 - 89
		Spring-applied brake	6.6 - 91
		Feedback	6.6 - 103
		Blower	6.6 - 104
		Temperature monitoring	6.6 - 107

Rated data for 50 Hz

4-pole motors

Product								
	P_N	n_N	n_{max}	M_N	M_a	M_b	J [1]	m [1]
	[kW]	[r/min]	[r/min]	[Nm]	[Nm]	[Nm]	[kgcm²]	[kg]
MD□MA□□063-02	0.060	1425	4500	0.40	1.30	1.36	3.30	3.90
MD□MA□□063-22	0.090	1375	4500	0.63	1.30	1.39	3.30	3.90
MD□MA□□063-12	0.12	1425	4500	0.80	2.50	2.64	3.30	4.10
MD□MA□□063-32	0.18	1365	4500	1.26	2.50	2.61	3.30	4.10
MD□MA□□063-42	0.25	1370	4500	1.74	3.80	4.10	3.70	4.40
MD□MA□□071-32	0.37	1410	4500	2.51	4.76	5.81	10.7	5.80
MD□MA□□071-42	0.55	1405	4500	3.74	7.85	9.12	12.8	6.40

Product								
	$U_{N,\Delta}$	$I_{N,\Delta}$	$U_{N,Y}$	$I_{N,Y}$	I_a/I_N	cos ϕ	$\eta_{75\,\%}$	$\eta_{100\,\%}$
	± 10 %		± 10 %					
	[V]	[A]	[V]	[A]			[%]	[%]
MD□MA□□063-02	230	0.42	400	0.24	3.5	0.57	59.0	63.0
MD□MA□□063-22	230	0.48	400	0.28	2.9	0.71	63.0	65.0
MD□MA□□063-12	230	0.85	400	0.49	3.1	0.56	58.0	63.0
MD□MA□□063-32	230	1.00	400	0.58	2.7	0.70	63.0	64.0
MD□MA□□063-42	230	1.40	400	0.82	2.9	0.67	65.0	66.0
MD□MA□□071-32	230	1.60	400	0.95	3.3	0.77	73.0	73.0
MD□MA□□071-42	230	2.40	400	1.40	3.5	0.77	74.0	74.0

[1] Without accessories

Rated data for 87 Hz

4-pole motors

Product							
	P_N	n_N	n_{max}	M_N	M_{max}	J [1]	m [1]
	[kW]	[r/min]	[r/min]	[Nm]	[Nm]	[kgcm²]	[kg]
MD□MA□□063-02	0.11	2535	4500	0.40	1.60	3.30	3.90
MD□MA□□063-22	0.16	2485	4500	0.63	2.50	3.30	3.90
MD□MA□□063-12	0.21	2535	4500	0.80	3.20	3.30	4.10
MD□MA□□063-32	0.33	2475	4500	1.26	5.00	3.30	4.10
MD□MA□□063-42	0.45	2480	4500	1.74	7.00	3.70	4.40
MD□MA□□071-32	0.66	2520	4500	2.51	10.0	10.7	5.80
MD□MA□□071-42	1.00	2515	4500	3.74	15.0	12.8	6.40

Product					
	$U_{N,\Delta}$	$I_{N,\Delta}$	cos ϕ	$\eta_{75\,\%}$	$\eta_{100\,\%}$
	± 10 %				
	[V]	[A]		[%]	[%]
MD□MA□□063-02	400	0.42	0.55	62.0	67.0
MD□MA□□063-22	400	0.48	0.67	66.0	70.0
MD□MA□□063-12	400	0.85	0.52	61.0	66.0
MD□MA□□063-32	400	1.00	0.65	68.0	71.0
MD□MA□□063-42	400	1.40	0.63	66.0	73.0
MD□MA□□071-32	400	1.60	0.72	76.0	78.0
MD□MA□□071-42	400	2.40	0.74	79.0	80.0

[1] Without accessories

Motor – inverter assignment

- ► Decentralised inverter 8400 motec (E84DVB)
- ► Inverter Drives 8400 (E84AV)

Rated frequency 50/60 Hz

Rated power	Product	Product key	
		Inverter	
P_N			
[kW]			
0.12	MD□MA□□063-12		E84AV□□□2512□□0
0.18	MD□MA□□063-32		
0.25	MD□MA□□063-42		
0.37	MD□MA□□071-32	E84DVB□3714S□□□2□	E84AV□□□3714□□0
0.55	MD□MA□□071-42	E84DVB□5514S□□□2□	E84AV□□□5514□□0

Rated frequency 87 Hz

Rated power	Product	Product key	
		Inverter	
P_N			
[kW]			
0.21	MD□MA□□063-12	E84DVB□5514S□□□2□	E84AV□□□5514□□0
0.33	MD□MA□□063-32		
0.45	MD□MA□□063-42		
0.66	MD□MA□□071-32	E84DVB□7514S□□□2□	E84AV□□□7514□□0
1.00	MD□MA□□071-42	E84DVB□1124S□□□2□	E84AV□□□1124□□0

Dimensions, 8400 motec inverter

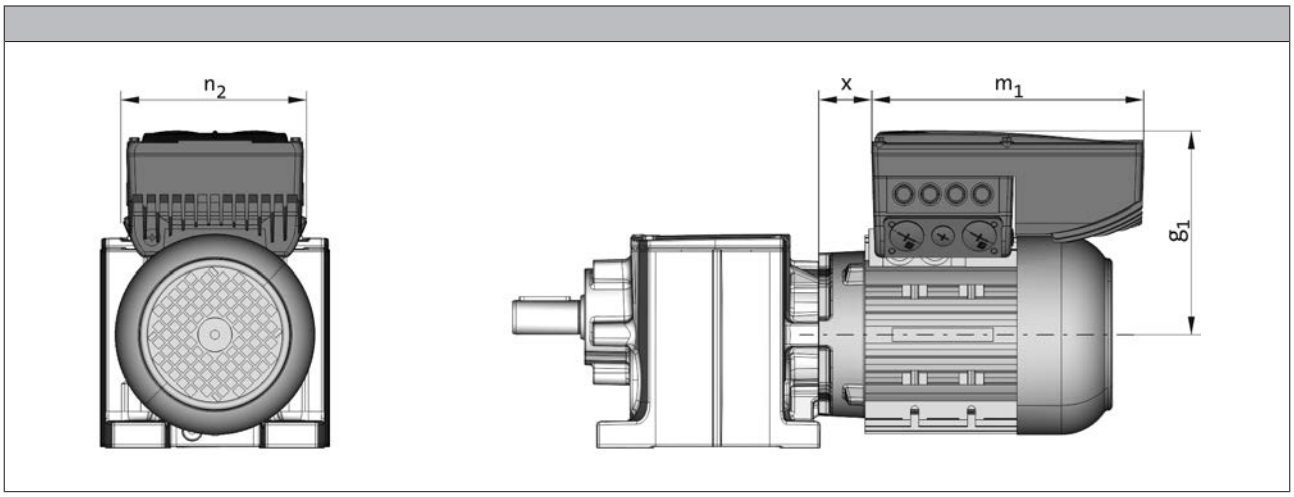

Rated frequency 50/60 Hz

Product	Product key	Dimensions			
	Inverter				
		$g_{1,\ 50Hz}$	$m_{1,\ 50Hz}$	$n_{2,\ 50Hz}$	x_{50Hz}
		[mm]	[mm]	[mm]	[mm]
MD□MA□□071-32	E84DVB□3714S□□□2□	163	241	161	17
MD□MA□□071-42	E84DVB□5514S□□□2□				

Rated frequency 87 Hz

Product	Product key	Dimensions			
	Inverter				
		$g_{1,\ 87Hz}$	$m_{1,\ 87Hz}$	$n_{2,\ 87Hz}$	x_{87Hz}
		[mm]	[mm]	[mm]	[mm]
MD□MA□□063-32	E84DVB□3714S□□□2□	154	241	161	15
MD□MA□□063-42	E84DVB□5514S□□□2□				
MD□MA□□071-32	E84DVB□7514S□□□2□	163			17
MD□MA□□071-42	E84DVB□1124S□□□2□				

Motor connection

The three-phase AC motors are designed for operation at a constant mains frequency and with an inverter.
For 50 Hz operation, the motors are operated in Δconfiguration at 230 V or in star configuration at 400 V.
For inverter operation, the base frequency has been specified as 87 Hz at a rated voltage of 400 V in Δconfiguration.

The standard connection is implemented via a terminal box. Furthermore ICN and HAN connectors are provided to quickly carry out commissioning or maintenance operations.

Overview of the connection options

Product	MD□MA□□063-02 MD□MA□□063-22 MD□MA□□063-12 MD□MA□□063-32 MD□MA□□063-42	MD□MA□□071-32 MD□MA□□071-42
Power connection/brake connection		
Terminal box	●	●
ICN connector M23	●	●
HAN 10E connector	●	●
HAN modular connector	●	●
Feedback connection		
Terminal box	●	●
ICN connector M23	●	●
ICN connector M12 [1]	●	●
Blower connection		
Terminal box	●	●
ICN connector M17	●	●
Temperature sensor connection		
Terminal box	●	●
ICN connector M23 [2]	●	●
HAN 10E connector	●	●
HAN modular connector	●	●

[1] Connection for IG128-24V-H incremental encoder
[2] TCO or PTC connected in the power connection and KTY connected in the feedback connection.

Motor connection

Assignment: motor terminal box - built-on accessories

► Depending on the motor version, terminal boxes of different sizes (KK1 ... KK3) are used.

Product	MD□MA□□063-02 MD□MA□□063-22 MD□MA□□063-12 MD□MA□□063-32 MD□MA□□063-42	MD□MA□□071-32 MD□MA□□071-42
Built-on accessories with 1 thermal sensor		
Without	KK1 KK1 + ICN HAN 10 E HAN modular	KK1 KK1 + ICN HAN 10 E HAN modular
Feedback	KK2 KK2 + ICN	KK2 KK2 + ICN
Brake	KK2 KK2 + ICN HAN 10 E HAN modular	KK2 KK2 + ICN HAN 10 E HAN modular
Brake + Feedback	KK3 KK2 + ICN	KK3 KK2 + ICN
Built-on accessories with 2 thermal sensors		
Without	KK2	KK2
Feedback	KK2	KK2
Brake (2-pole terminal)	KK2	KK2
Brake (rectifier)	KK2	KK2
Brake + Feedback	KK3	KK3

Motor connection

Position of cable entry/connector

For geared motors, the position of the cable entry must be selected as a function of the terminal box position.

Terminal box positions 2 ... 5	Cable entry positions 1 ... 5
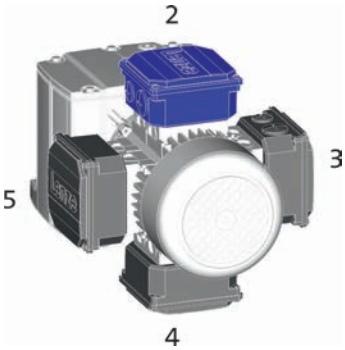	

Terminal box position	2	3	4	5
	Cable entry positions			
KK1	1/3/5*	1/2*/4	1/3*/5	1/2/4*
KK2	3+5	2+4	3+5	2+4
KK3	3+5	2+4	3+5	2+4
	Connector position			
HAN	1/3/5	1/2/4	1/3/5	1/2/4
KK1 + ICN	1/3/5*	1/2*/4	1/3*/5	1/2/4*
KK2 + ICN	3/5*	2*/4	3/5*	2/4*

- ► If preferred positions are not specified in the order, the cable entry will be positioned as indicated by * on the diagram below.
- ► If preferred positions are not specified in the order, the connector will be positioned as indicated by * on the diagram below.

Connection via terminal box

Dimensions of KK1

The connection in the terminal box is implemented by means of conventional cable glands.

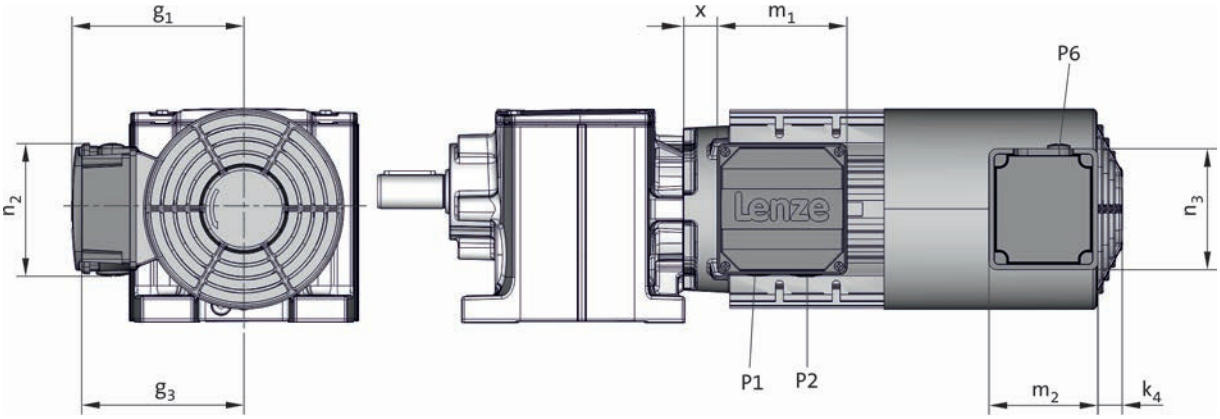

Product			MD□MA□□	
			063-02 063-12 063-22 063-32 063-42	071-42 071-32
Dimensions				
	x	[mm]	17	20
	g_1	[mm]	100	109
	m_1	[mm]	75.0	
	n_2	[mm]	75.0	
	P_1	[mm]	M16x1.5	
	P_2	[mm]	M20x1.5	
	k_4	[mm]	12	
	g_3	[mm]	115	122
	m_2	[mm]	95	
	n_3	[mm]	105	
	P_6	[mm]	1x M16x1.5	

Connection via terminal box

Dimensions of KK2

The connection in the terminal box is implemented by means of conventional cable glands.

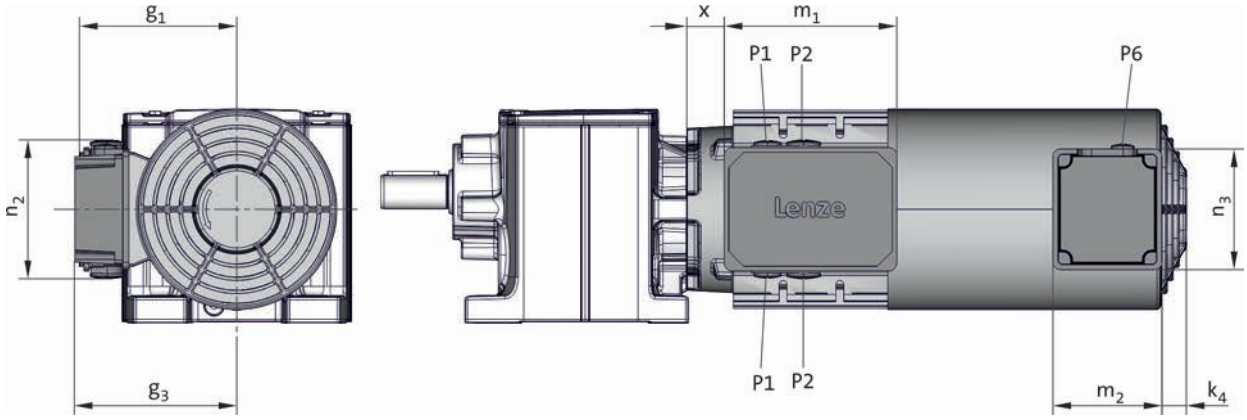

Product			MD□MA□□	
			063-02 063-12 063-22 063-32 063-42	071-42 071-32
Dimensions				
	x	[mm]	9	11
	g_1	[mm]	107	118
	m_1	[mm]	136	
	n_2	[mm]	103	
	P_1	[mm]	M16x1.5	
	P_2	[mm]	M20x1.5	
	k_4	[mm]	12	
	g_3	[mm]	115	122
	m_2	[mm]	95	
	n_3	[mm]	105	
	P_6	[mm]	1x M16x1.5	

Connection via terminal box

Dimensions of KK3

The connection in the terminal box is implemented by means of conventional cable glands.

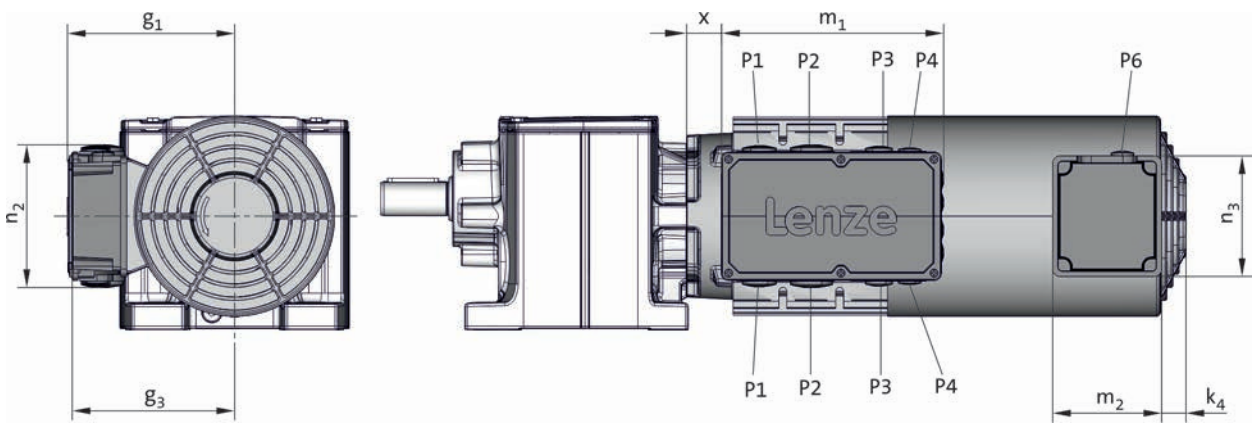

Product			MD□MA□□	
			063-02 063-12 063-22 063-32 063-42	071-42 071-32
Dimensions				
	x	[mm]	-2	1
	g_1	[mm]	124	133
	m_1	[mm]	195	
	n_2	[mm]	125	
	P_1	[mm]	M25x1.5	
	P_2	[mm]	M32x1.5	
	P_3	[mm]	M20x1.5	
	P_4	[mm]	M16x1.5	
	k_4	[mm]	12	
	g_3	[mm]	115	122
	m_2	[mm]	95	
	n_3	[mm]	105	
	P_6	[mm]	1x M16x1.5	

Connections via ICN connectors

A connector is used for the power connection, connection of the brake, and the temperature monitoring connection.
The feedback and blower connections are implemented via a separate connector in each case.

Connection for power, brake and temperature monitoring

For the power connection of the connector, a max. rated motor current of 16 A is permissible.
The connectors can be rotated by 270° and are equipped with a bayonet catch for SpeedTec connectors. As the connector fixing is also compatible with conventional box nuts, existing mating connectors can still be used without difficulty. The motor connection is determined in the terminal box.

ICN M23 6-pole

► No temperature monitoring connection possible!
If a feedback is used, the thermal detector KTY connection can be realised in the separate connection of the feedback (ICN M23 connector).

Pin assignment			
Contact	Designation	Meaning	
1	BD1 / BA1	Brake +/AC	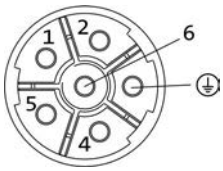
2	BD2 / BA2	Brake -/AC	
PE	PE	PE conductor	
4	U	Phase U power	
5	V	Phase V power	
6	W	Phase W power	

ICN M23 8-pole

Pin assignment			
Contact	Designation	Meaning	
1	U	Phase U power	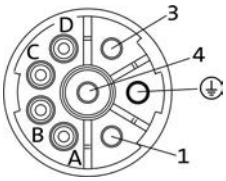
PE	PE	PE conductor	
3	W	Phase W power	
4	V	Phase V power	
A	TB1 / TP1 / R1	Thermal sensor: TKO/PTC/ +KTY	
B	TB2 / TP2 / R2	Thermal sensor: TKO/PTC/-KTY	
C	BD1 / BA1	Brake +/AC	
D	BD2 / BA2	Brake -/AC	

Connections via ICN connectors

Blower connection

The blower is also optionally available with an ICN connector fixed to the terminal box of the blower for exceptionally fast commissioning. The connectors are fitted with a bayonet fixing, which is also compatible with conventional union nuts. Existing counter plugs can therefore continue to be used without difficulty.

For the blower, the terminal box cover including the connector can be rotated by 90 ° step by step, if required.

ICN M17 for 1-ph blower

Pin assignment			
Contact	Designation	Meaning	
PE	PE	PE conductor	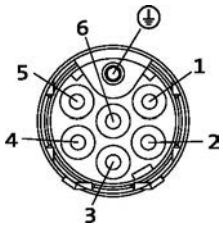
1	U1	Fan	
2	U2		
3		Not assigned	
4			
5			
6			

ICN M17 for 3-ph blower

Pin assignment			
Contact	Designation	Meaning	
PE	PE	PE conductor	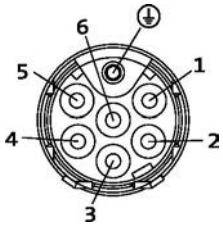
1	U	Phase U power	
2		Not assigned	
3	V	Phase V power	
4		Not assigned	
5			
6	W	Phase W power	

Connections via ICN connectors

Feedback connection

All encoder systems (apart from IG128-24V-H) are also available with an ICN connector fixed to the motor terminal box for exceptionally fast commissioning. The connectors are fitted with a bayonet fixing, which is also compatible with conventional union nuts. Existing mating connectors can therefore continue to be used without difficulty.
The feedback connector is located on the terminal box side opposite to the power connection

ICN M23 for resolver

Pin assignment			
Contact	Designation	Meaning	
1	+Ref	Transformer windings	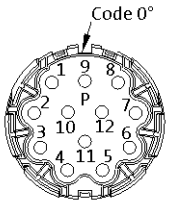
2	-Ref		
3	+VCC ETS	Supply: Electronic nameplate	
4	+COS	Cosine stator windings	
5	-COS		
6	+SIN	Sine stator windings	
7	-SIN		
8		Not assigned	
9			
10			
11	+KTY	KTY temperature sensor	
12	-KTY		

ICN M23 for incremental encoder and SinCos absolute value encoder hiperface

Pin assignment			
Contact	Designation	Meaning	
1	B	Track B/+SIN	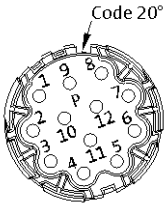
2	A^-	Track A inverse/-COS	
3	A	Track A/+COS	
4	$+U_B$	Supply +	
5	GND	Mass	
6	Z^-	Zero track inverse/-RS485	
7	Z	Zero track/+RS485	
8		Not assigned	
9	B^-	Track B inverse/-SIN	
10		Not assigned	
11	+KTY	KTY temperature sensor	
12	-KTY		

Connections via ICN connectors

Dimensions KK1+ICN

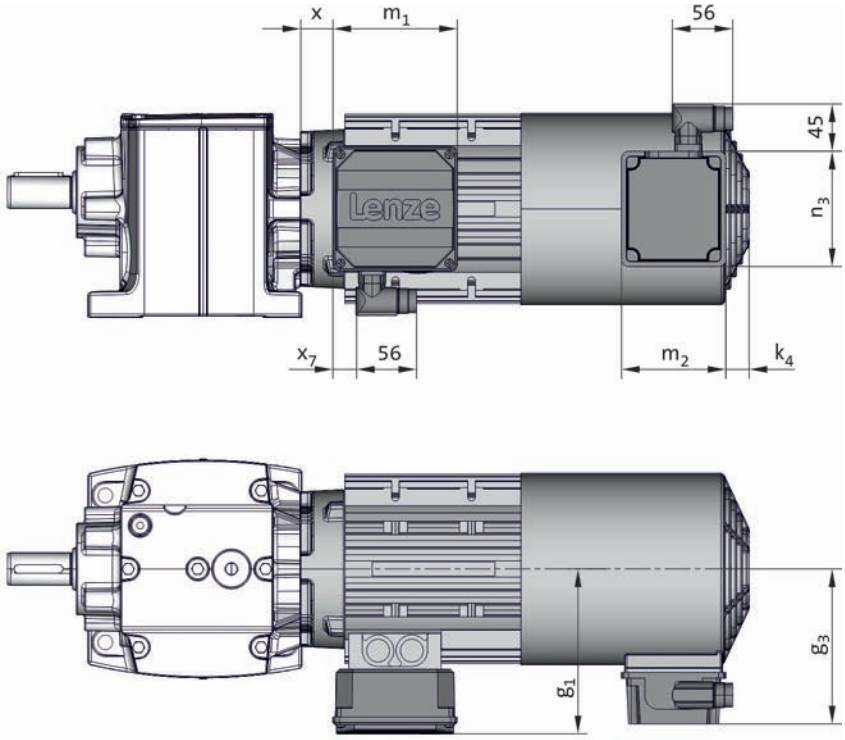

Product			MD□MA□□	
			063-02 063-12 063-22 063-32 063-42	071-42 071-32
Dimensions				
	x	[mm]	17	20
	g_1	[mm]	100	109
	m_1	[mm]	75.0	
	n_2	[mm]	75.0	
	x_7	[mm]	16	
	k_4	[mm]	12	
	g_3	[mm]	115	122
	m_2	[mm]	95	
	n_3	[mm]	105	

Connections via ICN connectors

Dimensions KK2+ICN

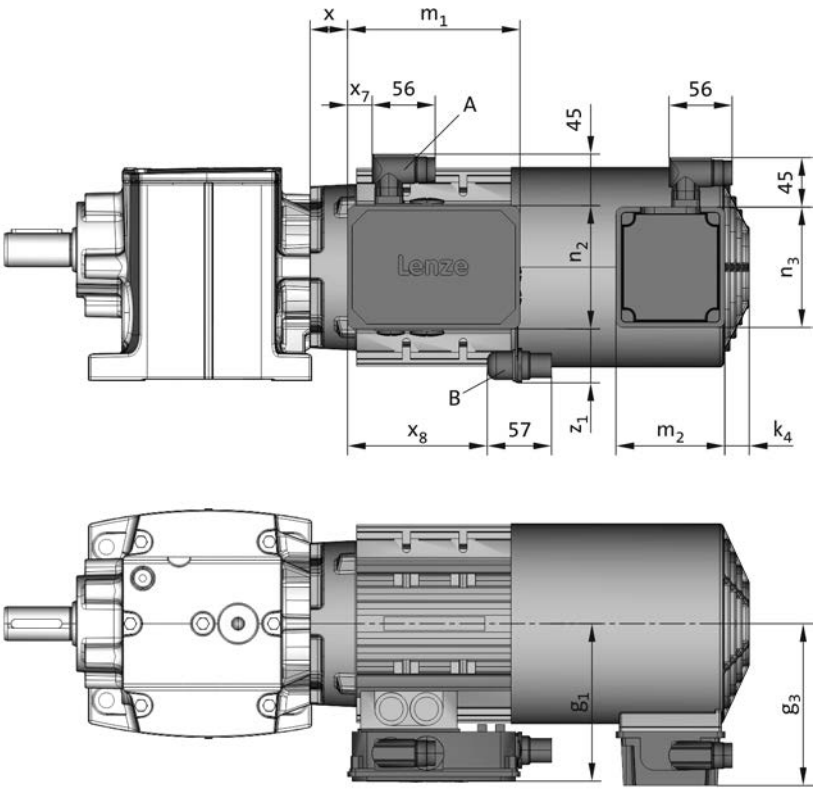

Product			MD□MA□□	
			063-02 063-12 063-22 063-32 063-42	071-42 071-32
Dimensions				
	x	[mm]	9	11
	g_1	[mm]	107	118
	m_1	[mm]	136	
	n_2	[mm]	103	
	x_7	[mm]	16	
	x_8	[mm]	109	
	$z_{1, max}$	[mm]	43	
	k_4	[mm]	12	
	g_3	[mm]	115	122
	m_2	[mm]	95	
	n_3	[mm]	105	

A= power connection
B= feedback connection (not for KK1)

Connection via ICN M12 connector

IG128-24V-H incremental encoder connection

As a standard this incremental encoder is equipped with a connection cable of about 0.5 m length and with a common industry standard M12 connector at its end.

Pin assignment			
Contact	Designation	Meaning	
1	$+U_B$	Supply +	
2	B	Track B	
3	GND	Mass	
4	A	Track A	

Connections via HAN connectors

HAN 10 E

In the case of the rectangular HAN 10E connectors, all six ends of the three winding phases are taken out to the power contacts. The motor circuit is therefore determined in the mating connector.

Pin assignment		
Contact	Meaning	
1	Terminal board: U1	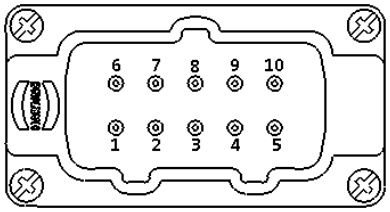
2	Terminal board: V1	
3	Terminal board: W1	
4	Brake +/AC	
5	Brake -/AC	
6	Terminal board: W2	
7	Terminal board: U2	
8	Terminal board: V2	
9	Thermal sensor: +KTY/PTC/TKO	
10	Thermal sensor: KTY/PTC/TKO	

Connections via HAN connectors

HAN modular

The connector is available with two different power modules (16 A or 40 A), depending on the rated motor current. The motor connection is determined in the terminal box and must be checked before commissioning.

► HAN modular 16 A

Pin assignment			
Module	Contact	Meaning	
A	1	Terminal board: U1	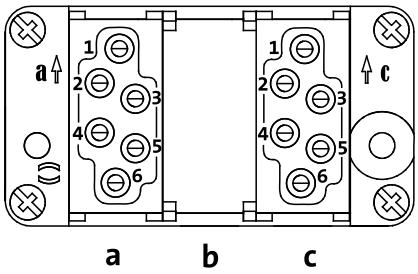
	2	Terminal board: V1	
	3	Terminal board: W1	
B		Dummy module	
C	1	Thermal sensor: +KTY/PTC/TKO	
	2	Brake +/AC	
	3	Brake -/AC	
	4	Rectifier: Switching contact	
	5		
	6	Thermal sensor: KTY/PTC/TKO	

► HAN modular 40 A

Pin assignment			
Module	Contact	Meaning	
A	1	Terminal board: U1	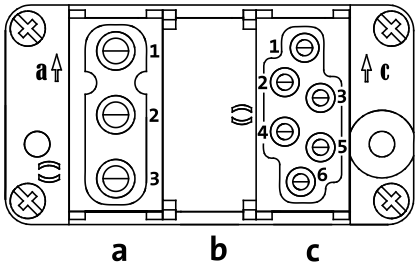
	2	Terminal board: V1	
	3	Terminal board: W1	
B		Dummy module	
C	1	Thermal sensor: +KTY/PTC/TKO	
	2	Brake +/AC	
	3	Brake -/AC	
	4	Rectifier: Switching contact	
	5		
	6	Thermal sensor: KTY/PTC/TKO	

Connections via HAN connectors

Dimensions

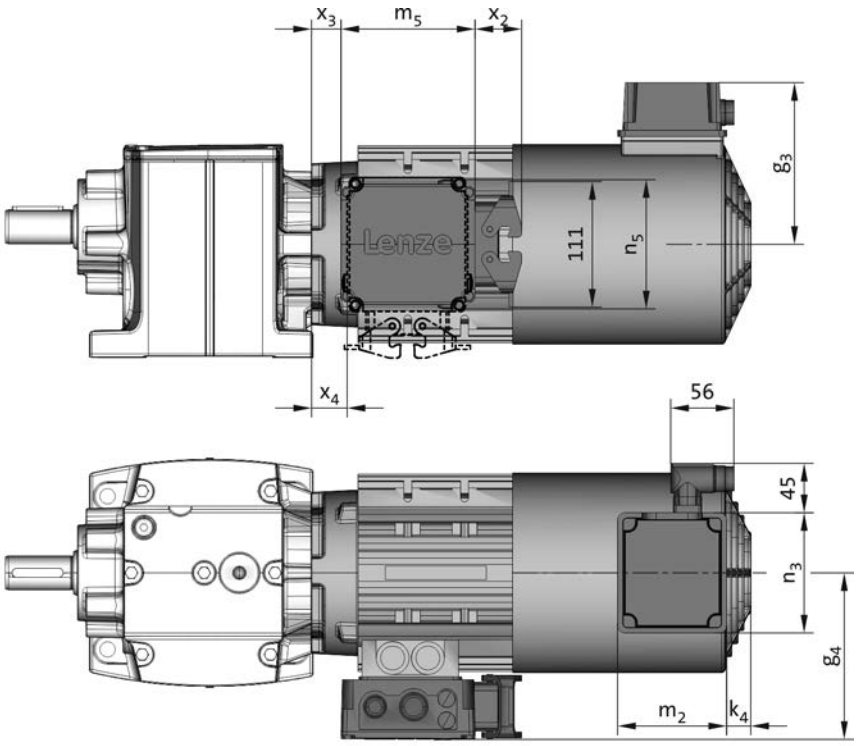

Product			MD□MA□□	
			063-02 063-12 063-22 063-32 063-42	071-42 071-32
Dimensions				
	g_4	[mm]	120	129
	x_3	[mm]	1	3
	x_4	[mm]	2	4
	x_2	[mm]	41	
	m_5	[mm]	118	
	n_5	[mm]	102	
	k_4	[mm]	12	
	g_3	[mm]	115	122
	m_2	[mm]	95	
	n_3	[mm]	105	

Spring-applied brake

The three-phase AC motors can be equipped with a spring-applied brake which is active when the supply voltage has been switched off (closed-circuit principle). In the deenergised state, the brake is applied. This prevents possible movement of the motor shaft with regard to the load after switch-off or in the event of a power failure.
For optimum adaptation of the brake motor to the application, several brake sizes and control variants are provided for each motor.

Versions

- **Standard**
  - 1 x 10^6 repeating switching cycles
  - 1 x 10^6 reversing switching cycles
- **LongLife**
  - 10 x 10^6 repeating switching cycles
  - 15 x 10^6 reversing switching cycles

Braking torques

In addition to the standard braking torque, depending on the brake size, the possibility of choosing between a reduced and an increased braking torque is provided.

- When the braking torque is reduced, great wear reserves can be attained. This is enabled by a reduction of the spring rate.
- In order to obtain a greater braking torque, the spring rate is increased. This is practical, for instance, for hoists, since here the gravity acts as an additional acceleration in the negative direction.

Manual release

By using the manual release lever, the brake can be released manually in deenergised operating state. The manual release makes positioning and maintenance work easier.

Spring-applied brake

Direct connection without rectifier

If the brake is activated directly without a rectifier, a freewheeling diode or a spark suppressor is required for protection against induction peaks.
- Supply voltages
  DC 24 V

Connection via mains voltage with brake rectifier

If the brake is not directly supplied with DC voltage, a rectifier is required. This is included in the scope of supply and is located in the terminal box of the motor. The rectifier converts the AC voltage of the connection into DC voltage. The following rectifiers are available:

Rectifier, 6-pole
- Approval UL / CSA
- Supply voltages
  AC 230 V
  AC 400 V
  AC 460 V

Bridge/half-wave rectifier, 6-pole
- Supply voltage / brake coil voltage ratio
  up to the overexcitation time = 1.11
  From the overexcitation time = 2.22
- Supply voltages
  AC 230 V
  AC 400 V

During the switching operation the bridge/half-wave rectifier functions as a bridge rectifier for the overexcitation time $t_{ü}$ and then as a half-wave rectifier. This combination optimises the performance of the brake – depending on the assignment of brake coil voltage and supply voltage:

- **Short-time overexcitation of the brake coil**
  Activating the brake coil for the overexcitation time $t_{ü}$ with twice the rated voltage allows the disengagement time to be reduced. The brake opens more quickly and wear on the friction lining is reduced.
  These features make this activation version particularly suitable for lifting applications. It is therefore only available in combination with a brake with increased braking torque.
- **Holding current reduction (cold brake)**
  By reducing the holding current, the bridge/half-wave rectifier is able to reduce the power input to the open brake. As the brake heats up less, this type of activation is known as "cold brake".

Spring-applied brake

Assignment of 4-pole motors and brakes

Design	Standard		LongLife	
Product	**Size**	**Rated torque**	**Size**	**Rated torque**
	Brake		Brake	
		M_k		M_k
		[Nm]		[Nm]
MD□MA□□063-02 MD□MA□□063-12 MD□MA□□063-22 MD□MA□□063-32 MD□MA□□063-42	06 06	2.50 4.00	06	4.00
MD□MA□□071-32	06 06 08	2.50 4.00 3.50	06 08	4.00 3.50
MD□MA□□071-42	06 06 08 08	2.50 4.00 3.50 8.00	06 08 08	4.00 3.50 8.00

Spring-applied brake

Permissible friction energy

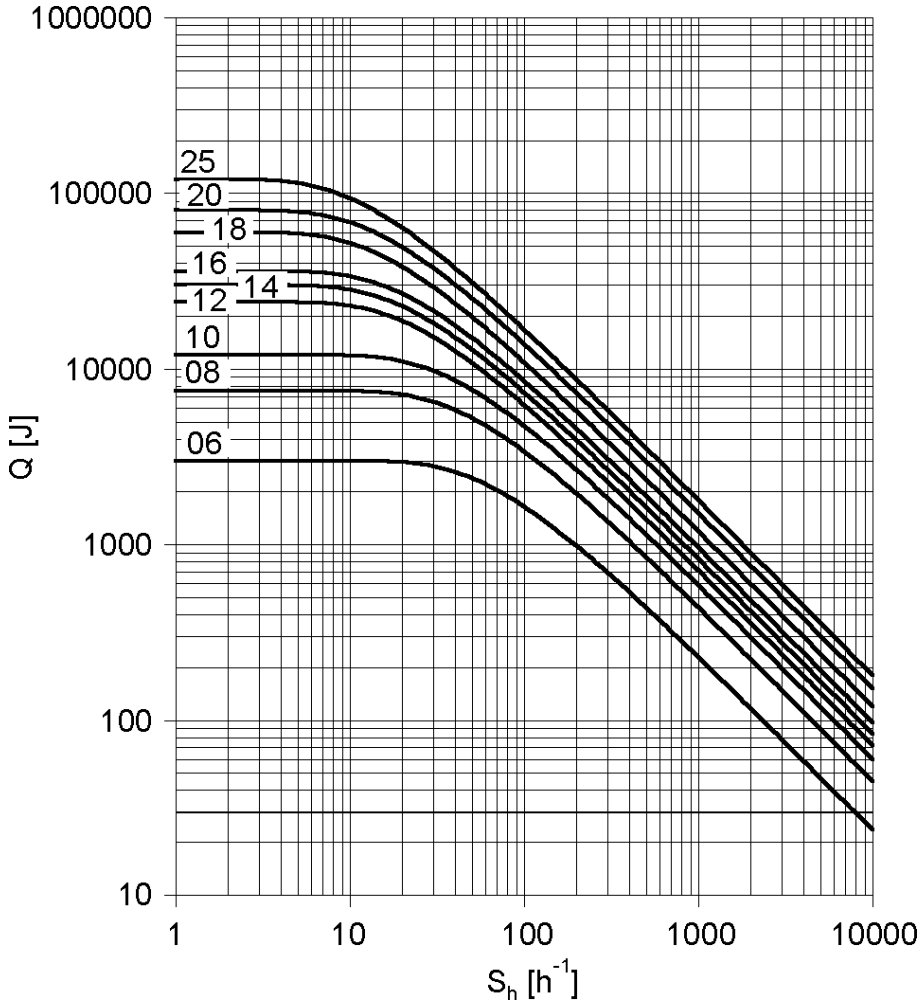

Q =Switching energy per switching cycle
S_h =Operating frequency
Brake size = 06 to 25

Spring-applied brake

Rated data with reduced braking torque

- ► In case of the braking torque and the maximum switching energy, the unit for the values (100 ... 3600) is rpm.
- ► Please enquire for braking torques and maximum switching work values not listed here.

Size			06	08
Power input				
	P_{in}	[kW]	0.020	0.025
Braking torque				
100	M_B	[Nm]	2.50	3.50
1000	M_B	[Nm]	2.30	3.10
1200	M_B	[Nm]	2.30	3.10
1500	M_B	[Nm]	2.20	3.00
1800	M_B	[Nm]	2.10	2.90
3000	M_B	[Nm]	2.00	2.80
3600	M_B	[Nm]	2.00	2.70
Maximum switching energy				
100	Q_E	[KJ]	3.00	7.50
1000	Q_E	[KJ]	3.00	7.50
1200	Q_E	[KJ]	3.00	7.50
1500	Q_E	[KJ]	3.00	7.50
1800	Q_E	[KJ]	3.00	7.50
3000	Q_E	[KJ]	3.00	7.50
3600	Q_E	[KJ]	3.00	7.50
Transition operating frequency				
	$S_{hü}$	[1/h]	79.0	50.0
Moment of inertia				
	J	[kgcm²]	0.15	0.61
Mass				
	m	[kg]	0.90	1.50

Spring-applied brake

Rated data with reduced braking torque

► Activation via half-wave or bridge rectifier

Size				
			06	08
Friction energy				
	Q_{BW}	[MJ]	113	210
Delay time				
Engaging	t_{11}	[ms]	11.0	14.0
Rise time				
Braking torque	t_{12}	[ms]	13.0	10.0
Engagement time				
	t_1	[ms]	24.0	
Disengagement time				
	t_2	[ms]	35.0	37.0

► Activation via bridge/half-wave rectifier

Design				
			Holding current reduction (cold brake)	
Size				
			06	08
Friction energy				
	Q_{BW}	[MJ]	113	210
Overexcitation time				
	$t_ü$	[ms]	300	
Min. rest time				
	t	[ms]	900	
Delay time				
Engaging	t_{11}	[ms]	12.0	22.0
Rise time				
Braking torque	t_{12}	[ms]	14.0	16.0
Engagement time				
	t_1	[ms]	26.0	38.0
Disengagement time				
	t_2	[ms]	35.0	37.0

► The brake response and application times are guide values. The engagement time is 10 times longer with AC-side switching. With the maximum air gap the disengagement time t_2 – depending on the brake and control – is up to 4 times longer than the disengagement time with the rated air gap.

Spring-applied brake

Rated data with standard braking torque

- ► In case of the braking torque and the maximum switching energy, the unit for the values (100 ... 3600) is rpm.
- ► Please enquire for braking torques and maximum switching work values not listed here.

Size			06	08
Power input				
	P_{in}	[kW]	0.020	0.025
Braking torque				
100	M_B	[Nm]	4.00	8.00
1000	M_B	[Nm]	3.70	7.20
1200	M_B	[Nm]	3.60	7.00
1500	M_B	[Nm]	3.50	6.80
1800	M_B	[Nm]	3.40	6.70
3000	M_B	[Nm]	3.20	6.30
3600	M_B	[Nm]	3.20	6.10
Maximum switching energy				
100	Q_E	[KJ]	3.00	7.50
1000	Q_E	[KJ]	3.00	7.50
1200	Q_E	[KJ]	3.00	7.50
1500	Q_E	[KJ]	3.00	7.50
1800	Q_E	[KJ]	3.00	7.50
3000	Q_E	[KJ]	3.00	7.50
3600	Q_E	[KJ]	3.00	7.50
Transition operating frequency				
	$S_{hü}$	[1/h]	79.0	50.0
Moment of inertia				
	J	[kgcm²]	0.15	0.61
Mass				
	m	[kg]	0.90	1.50

Spring-applied brake

Rated data with standard braking torque

► Activation via half-wave or bridge rectifier

Size				
			06	08
Friction energy				
	Q_{BW}	[MJ]	85.0	158
Delay time				
Engaging	t_{11}	[ms]	15.0	
Rise time				
Braking torque	t_{12}	[ms]	13.0	16.0
Engagement time				
	t_1	[ms]	28.0	31.0
Disengagement time				
	t_2	[ms]	45.0	57.0

► Activation via bridge/half-wave rectifier

Design				
			Holding current reduction (cold brake)	
Size				
			06	08
Friction energy				
	Q_{BW}	[MJ]	85.0	158
Overexcitation time				
	$t_ü$	[ms]	300	
Min. rest time				
	t	[ms]	900	
Delay time				
Engaging	t_{11}	[ms]	16.0	25.0
Rise time				
Braking torque	t_{12}	[ms]	14.0	27.0
Engagement time				
	t_1	[ms]	30.0	52.0
Disengagement time				
	t_2	[ms]	45.0	57.0

► The brake response and application times are guide values. The engagement time is 10 times longer with AC-side switching. With the maximum air gap the disengagement time t_2 – depending on the brake and control – is up to 4 times longer than the disengagement time with the rated air gap.

Spring-applied brake

Manual release

By using the manual release lever, the brake can be released manually in deenergised operating state. The manual release makes positioning and maintenance work easier.

Manual release lever

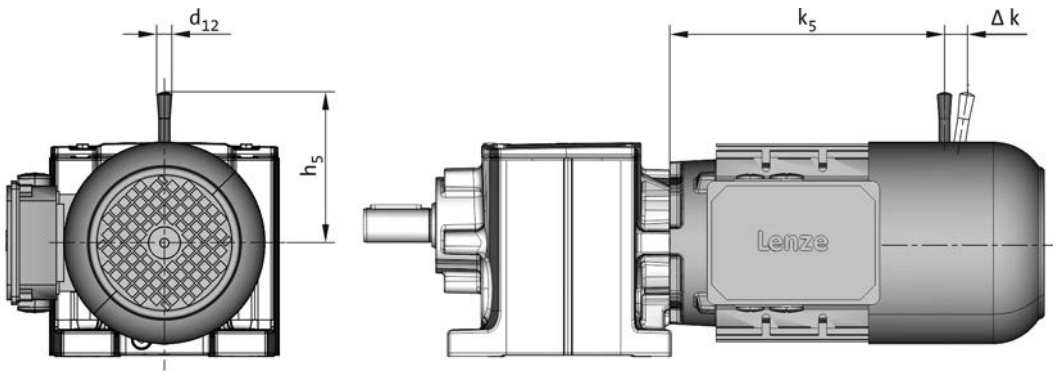

Product	Size	Dimensions			
	Brake				
		k_5	Δ k	h_5	d_{12}
		[mm]	[mm]	[mm]	[mm]
MD□MA□□063-02 MD□MA□□063-22	06	185	29	107	13.0
MD□MA□□063-12 MD□MA□□063-32 MD□MA□□063-42	06	169	29	107	13.0
MD□MA□□071-32 MD□MA□□071-42	06 08	182 183	29 27	107 116	13.0 13.0

The following combinations with manual release lever and motor connection in the same position are not possible:
- HAN connector with connection in position 1
- Inverter motec
- Terminal box of motor size 071 for brake and retracting (M□□MA BR/BS/BA/BI)

Feedback

Depending on the application, the following resolvers, incremental encoders or absolute value encoders are provided for speed and position detection.

Resolver

The stator-supplied resolver with two stator windings shifted by 90° and a rotor winding with transformer winding can detect both the speed and the rotor position. The rotor position is retained in the event of a voltage failure.

► The three-phase AC motors with resolver cannot be used for speed-dependent safety functions in connection with the SM 301 safety module.

Product key				
				RS1
Accuracy				
			[']	-10 ... 10
Absolute positioning				
				1 revolution
Max. input voltage				
DC	$U_{in,max}$		[V]	10.0
Max. input frequency				
	$f_{in,max}$		[kHz]	4.00
Ratio				
Stator / rotor		± 5 %		0.30
Rotor impedance				
	Z_{ro}		[Ω]	51 + j90
Stator impedance				
	Z_{so}		[Ω]	102 + j150
Impedance				
	Z_{rs}		[Ω]	44 + j76
Min. insulation resistance				
At DC 500 V	R		[MΩ]	10.0
Number of pole pairs				
				1

Feedback

Incremental encoder and SinCos absolute value encoder

Incremental encoders can only be used for speed measurement, but not for speed control. Homing is required in order to enable positioning later.

Absolute value encoders can detect the speed, the rotor position, and the machine position with a very high resolution. They are used for the positioning of dynamic applications and do not require homing.

► The three-phase AC motors with incremental encoders or SinCos absolute value encoders cannot be used for speed-dependent safety functions in connection with the SM 301 safety module.

Encoder type			HTL incremental				TTL incremental			SinCos absolute value
Product key			IG128-24V-H	IG512-24V-H	IG1024-24V-H	IG2048-24V-H	IG512-5V-T	IG1024-5V-T	IG2048-5V-T	AM1024-8V-H
Encoder type										Multi-turn
Pulses			128	512	1024	2048	512	1024	2048	1024
Output signals			HTL				TTL			1 Vss
Interfaces			A, B track	A, B, N track and inverted						Hiperface
Absolute revolutions			0							4096
Accuracy		[′]	-22.5 ... 22.5	-2 ... 2						-0.8 ... 0.8
Min. input voltage										
DC	$U_{in,min}$	[V]	8.00				4.75			7.00
Max. input voltage										
DC	$U_{in,max}$	[V]	26.0	30.0			5.25			12.0
Max. current consumption										
	I_{max}	[A]	0.040	0.15						0.080
Limit frequency										
	f_{max}	[kHz]	30.0	160			300			200

Blower

During operation with the rated torque at low speeds (< 20 Hz), the integral fan does not rotate fast enough anymore to ensure sufficient cooling of the motor. In order to prevent overheating, operation without a blower requires a torque reduction of the motor.
The blower cools the motor steadily and irrespective of the motor speed. A torque reduction is not required and the motor can be actuated with its rated torque from 5 Hz to the rated frequency.

Rated data for 50 Hz

Product	Number of phases	Connection method					
			U_{min}	U_{max}	P_{max}	I_{max}	m
			[V]	[V]	[kW]	[A]	[kg]
MD□MA□□063-12 MD□MA□□063-32 MD□MA□□063-42	1		230	277	0.027	0.11	2.00
	3	Δ	200	303	0.028	0.12	
		Y	346	525		0.070	
MD□MA□□071-32 MD□MA□□071-42	1		230	277	0.027	0.10	2.10
	3	Δ	200	303	0.031	0.11	
		Y	346	525		0.060	

Blower

Dimensions, 4-pole motors

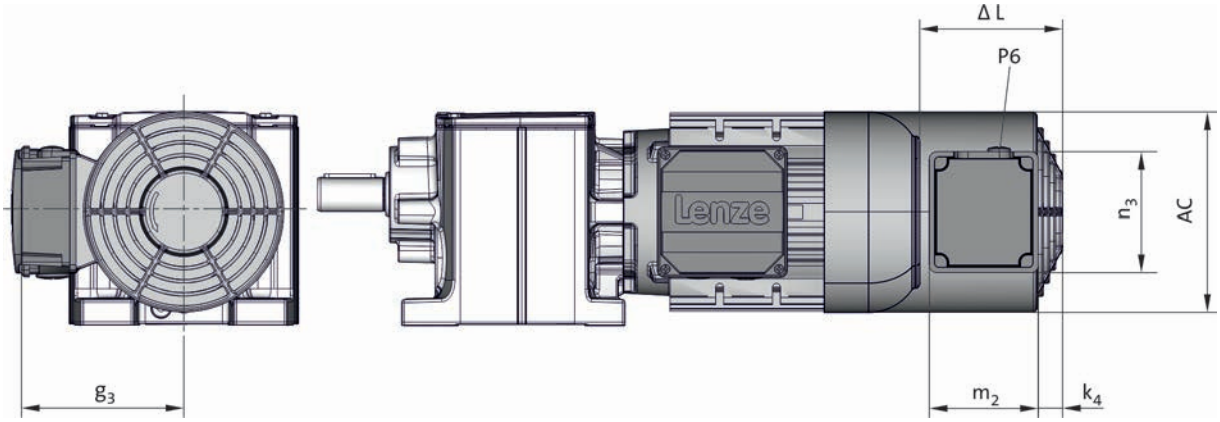

Built-on accessories					
	Without	Brake	Brake + Feedback	Feedback	

Product	Dimensions				
	Δ L	Δ L	Δ L	Δ L	AC
	[mm]	[mm]	[mm]	[mm]	[mm]
MD□MA□□063-12 MD□MA□□063-32 MD□MA□□063-42	128	170	170	128	123
MD□MA□□071-32 MD□MA□□071-32 MD□MA□□071-42		165	165		138

Product	Dimensions				
	k_4	g_3	m_2	n_3	P_6
	[mm]	[mm]	[mm]	[mm]	[mm]
MD□MA□□063-12 MD□MA□□063-32 MD□MA□□063-42	12	115	95	105	1x M16x1.5
MD□MA□□071-32 MD□MA□□071-42		122			

Temperature monitoring

To protect the motor against overheating, the following thermal sensors are provided.
The thermal sensors are integrated into the windings. We recommend using an additional motor protection switch.

TKO thermal contacts

The TCO thermal contact (thermal NC contact) is a bimetallic-element switch. The TCO monitors the motor winding temperature; at too high temperatures, the motor relay switches. The motor is disconnected from the mains.

Function	Operating temperature	Min. reset temperature	Max. reset temperature	Max. input current	Max. input voltage
					AC
	T	T_{min}	T_{max}	$I_{in,max}$	$U_{in,max}$
	-5 ... 5				
	[°C]	[°C]	[°C]	[A]	[V]
NC contact	150	90.0	135	2.50	250

PTC thermistor

The PTC thermistor is actuated in connection with a tripping unit. If the motor gets too hot, the motor can be switched off by means of a contactor. In contrast to the thermal contact, quick restart is possible.

Function	Operating temperature	Rated resistance			Standard
		155 °C	-20 °C	140 °C	
	T	R_N	R_N	R_N	
	-5 ... 5				
	[°C]	[Ω]	[Ω]	[Ω]	
Sudden change in resistance	150	550	30.0	250	DIN 44080 DIN VDE 0660 Part 303

Temperature monitoring

KTY temperature sensor

The KTY thermal detectors work as continuously variable resistors, showing a similar tendency as PTC thermistors. However, with an increasing temperature, the resistance only increases comparatively slowly, enabling the controller to determine the temperature at regular intervals and to already perform a process evaluation at an early stage. In this way, the motor can already be switched off before it is overheated.

	Function	Rated resistance			Max. input current	
		25 °C	150 °C	170 °C	25 °C	170 °C
		R_N	R_N	R_N	$I_{in,max}$	$I_{in,max}$
		[Ω]	[Ω]	[Ω]	[A]	[A]
KTY83-110	Continuous resistance change	1000	2225	2471	0.010	0.002
KTY84-130	Continuous resistance change	603	1334	1482	0.010	0.002

Variation of resistance

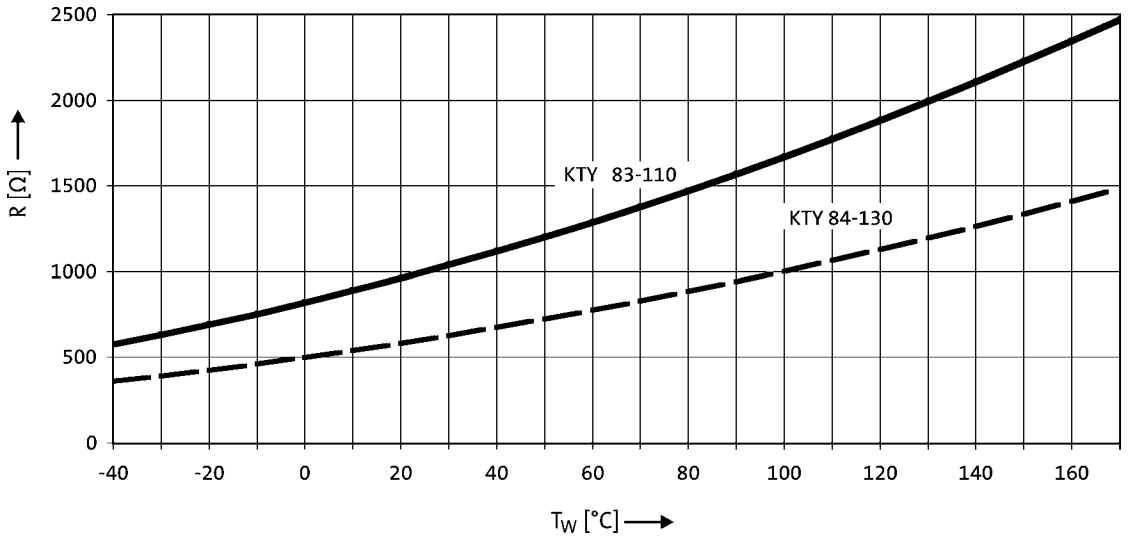

► If the thermal sensor is supplied with a measurement current of 1 mA, the above relationship between the temperature and the resistance applies.

Rated data for 50 Hz

4-pole motors

Product								
	P_N	n_N	n_{max}	M_N	M_a	M_b	J [1]	m [1]
	[kW]	[r/min]	[r/min]	[Nm]	[Nm]	[Nm]	[kgcm²]	[kg]
m550-P80/M4	0.75	1450	4500	4.90	16.0	17.6	26.8	15.0
m550-P90/M4	1.10	1444	4500	7.27	21.8	26.9	48.1	20.0
m550-P90/L4	1.50	1442	4500	9.93	31.8	39.7	51.8	21.0
m550-P100/M4	2.20	1452	4500	14.5	36.3	56.6	99.4	31.0
m550-P100/L4	3.00	1449	4500	19.8	47.5	69.3	111	33.0
m550-P112/M4	4.00	1453	4500	26.3	65.1	96.0	112	36.0
m550-P132/M4	5.50	1460	4500	36.0	119	137	300	57.0
m550-P132/L4	7.50	1477	4500	48.5	155	213	340	69.0
m550-P160/M4	11.0	1478	4500	71.1	249	320	770	108
m550-P160/L4	15.0	1470	4500	97.4	321	419	810	119
m550-P180/M4	18.5	1483	4500	119	357	429	1730	157
m550-P180/L4	22.0	1480	4500	142	369	440	1730	157
m550-P180/V4	30.0	1478	4500	194	736	853	2150	185

Product									
	$U_{N,\Delta}$	$I_{N,\Delta}$	$U_{N,Y}$	$I_{N,Y}$	I_a/I_N	cos ϕ	$\eta_{50\,\%}$	$\eta_{75\,\%}$	$\eta_{100\,\%}$
	[V]	[A]	[V]	[A]			[%]	[%]	[%]
m550-P80/M4	230	2.80	400	1.60	7.8	0.80	81.7	83.9	82.5
m550-P90/M4	230	4.10	400	2.40	7.2	0.80	81.5	84.1	85.0
m550-P90/L4	230	5.70	400	3.30	8.0	0.79	82.4	84.9	85.0
m550-P100/M4	230	7.20	400	4.20	7.3	0.88	86.0	87.3	87.0
m550-P100/L4	230	9.70	400	5.60	7.0	0.88	85.8	87.2	88.0
m550-P112/M4	230	13.5	400	7.80	9.0	0.84	87.3	88.3	88.6
m550-P132/M4	230	18.4	400	10.6	8.5	0.84	88.6	90.3	89.6
m550-P132/L4	230	25.5	400	14.7	7.3	0.83	89.7	90.5	90.4
m550-P160/M4	230	39.5	400	22.8	9.4	0.76	89.8	91.2	91.4
m550-P160/L4	230	53.0	400	30.6	9.3	0.77	90.9	91.9	92.1
m550-P180/M4	230	58.4	400	33.7	9.1	0.85	93.0	93.2	92.6
m550-P180/L4	230	69.6	400	40.2	8.2	0.85	92.9	93.2	93.0
m550-P180/V4	230	96.0	400	55.4	11.2	0.84	93.4	93.7	93.6

[1] Without accessories

Rated data for 87 Hz

4-pole motors

Product							
	P_N	n_N	n_{max}	M_N	M_{max}	J [1]	m [1]
	[kW]	[r/min]	[r/min]	[Nm]	[Nm]	[kgcm²]	[kg]
m550-P80/M4	1.35	2560	4500	5.10	20.0	26.8	15.0
m550-P90/M4	1.90	2550	4500	7.20	29.0	48.1	20.0
m550-P90/L4	2.60	2552	4500	9.90	40.0	51.8	21.0
m550-P100/M4	3.90	2562	4500	14.5	58.0	99.4	31.0
m550-P100/L4	5.20	2559	4500	19.6	78.0	111	33.0
m550-P112/M4	7.35	2565	4500	27.2	109	112	36.0
m550-P132/M4	9.60	2570	4500	36.0	144	300	57.0
m550-P132/L4	13.1	2587	4500	48.5	194	340	69.0
m550-P160/M4	19.2	2588	4500	71.1	284	770	108
m550-P160/L4	26.3	2580	4500	97.4	390	810	119
m550-P180/M4	32.2	2593	4500	119	476	1730	157
m550-P180/L4	38.5	2590	4500	142	568	1730	157
m550-P180/V4	52.5	2588	4500	194	775	2150	185

Product						
	$U_{N,\Delta}$	$I_{N,\Delta}$	cos ϕ	$\eta_{50\,\%}$	$\eta_{75\,\%}$	$\eta_{100\,\%}$
	[V]	[A]		[%]	[%]	[%]
m550-P80/M4	400	3.00	0.77	81.3	84.9	86.1
m550-P90/M4	400	4.20	0.75	85.6	87.0	87.4
m550-P90/L4	400	5.70	0.79	86.3	88.1	88.5
m550-P100/M4	400	7.20	0.88	87.3	89.9	90.4
m550-P100/L4	400	9.70	0.88	87.1	89.6	90.5
m550-P112/M4	400	14.0	0.84	87.5	89.5	90.6
m550-P132/M4	400	19.9	0.78	88.0	90.0	89.6
m550-P132/L4	400	25.5	0.82	88.4	90.4	90.4
m550-P160/M4	400	39.9	0.76	90.5	92.0	91.4
m550-P160/L4	400	51.3	0.81	91.5	92.5	92.1
m550-P180/M4	400	58.4	0.86	91.8	93.3	92.6
m550-P180/L4	400	70.1	0.86	92.3	93.5	93.0
m550-P180/V4	400	96.0	0.84	92.9	93.7	93.6

[1] Without accessories

Motor – inverter assignment

- ► Decentralised inverter 8400 motec (E84DVB)
- ► Inverter Drives 8400 (E84AV)

Rated frequency 50/60 Hz

Rated power	Product	Product key	
		Inverter	
P_N			
[kW]			
0.75	m550-P80/M4	E84DVB□7514S□□□2□	E84AV□□□7514□□0
1.10	m550-P90/M4	E84DVB□1124S□□□2□	E84AV□□□1124□□0
1.50	m550-P90/L4	E84DVB□1524S□□□2□	E84AV□□□1524□□0
2.20	m550-P100/M4	E84DVB□2224S□□□2□	E84AV□□□2224□□0
3.00	m550-P100/L4	E84DVB□3024S□□□2□	E84AV□□□3024□□0
4.00	m550-P112/M4	E84DVB□4024S□□□2□	E84AV□□□4024□□0
5.50	m550-P132/M4	E84DVB□5524S□□□2□	E84AV□□□5524□□0
7.50	m550-P132/L4	E84DVB□7524S□□□2□	E84AV□□□7524□□0
11.0	m550-P160/M4		E84AV□□□1134□□0
15.0	m550-P160/L4		E84AV□□□1534□□0
18.5	m550-P180/M4		E84AV□□□1834□□0
22.0	m550-P180/L4		E84AV□□□2234□□0
30.0	m550-P180/V4		E84AV□□□3034□□0

Rated frequency 87 Hz

Rated power	Product	Product key	
		Inverter	
P_N			
[kW]			
1.35	m550-P80/M4	E84DVB□1524S□□□2□	E84AV□□□1524□□0
1.90	m550-P90/M4	E84DVB□2224S□□□2□	E84AV□□□2224□□0
2.60	m550-P90/L4	E84DVB□3024S□□□2□	E84AV□□□3024□□0
3.90	m550-P100/M4	E84DVB□4024S□□□2□	E84AV□□□4024□□0
5.20	m550-P100/L4	E84DVB□5524S□□□2□	E84AV□□□5524□□0
7.35	m550-P112/M4	E84DVB□7524S□□□2□	E84AV□□□7524□□0
9.60	m550-P132/M4		E84AV□□□1134□□0
13.1	m550-P132/L4		E84AV□□□1534□□0
19.2	m550-P160/M4		E84AV□□□2234□□0
26.3	m550-P160/L4		E84AV□□□3034□□0
32.2	m550-P180/M4		E84AV□□□3734□□0
38.5	m550-P180/L4		E84AV□□□4534□□0

Dimensions, 8400 motec inverter

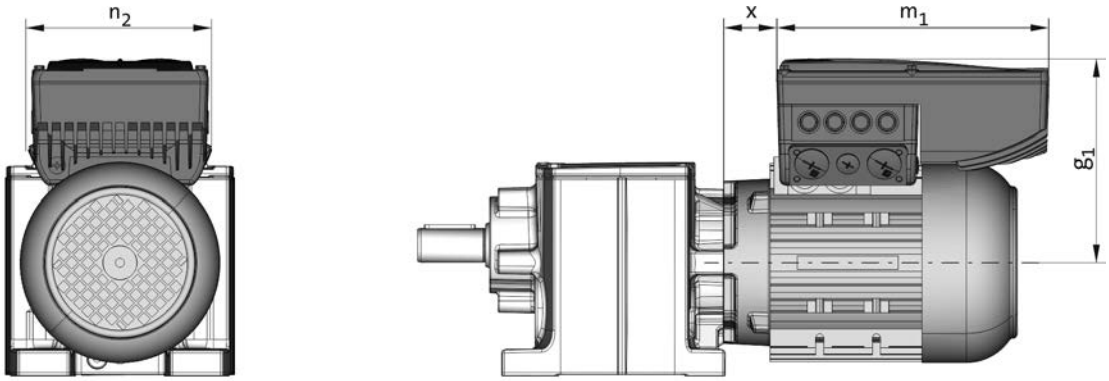

Rated frequency 50/60 Hz

Product	Product key	Dimensions			
	Inverter				
		$g_{1,\ 50Hz}$	$m_{1,\ 50Hz}$	$n_{2,\ 50Hz}$	x_{50Hz}
		[mm]	[mm]	[mm]	[mm]
m550-P80/M4	E84DVB□7514S□□□2□	190	241	161	29
m550-P90/M4	E84DVB□1124S□□□2□	198			49
m550-P90/L4	E84DVB□1524S□□□2□				
m550-P100/M4	E84DVB□2224S□□□2□	236	260	176	57
m550-P100/L4	E84DVB□3024S□□□2□				
m550-P112/M4	E84DVB□4024S□□□2□	300	325	195	40
m550-P132/M4	E84DVB□5524S□□□2□	297			52
m550-P132/L4	E84DVB□7524S□□□2□				

Rated frequency 87 Hz

Product	Product key	Dimensions			
	Inverter				
		$g_{1,\ 87Hz}$	$m_{1,\ 87Hz}$	$n_{2,\ 87Hz}$	x_{87Hz}
		[mm]	[mm]	[mm]	[mm]
m550-P80/M4	E84DVB□1524S□□□2□	190	241	161	29
m550-P90/M4	E84DVB□2224S□□□2□	227	260	176	47
m550-P90/L4	E84DVB□3024S□□□2□				
m550-P100/M4	E84DVB□4024S□□□2□	279	325	195	44
m550-P100/L4	E84DVB□5524S□□□2□				
m550-P112/M4	E84DVB□7524S□□□2□	300			40

Motor connection

The three-phase AC motors are designed for operation at a constant mains frequency and with an inverter.
For 50 Hz operation, the motors are operated in Δconfiguration at 230 V or in star configuration at 400 V.
For inverter operation, the base frequency has been specified as 87 Hz at a rated voltage of 400 V in Δconfiguration.

The standard connection is implemented via a terminal box. Furthermore ICN and HAN connectors are provided to quickly carry out commissioning or maintenance operations.

Overview of the connection options

Product	m550-P80/M4	m550-P90/M4 m550-P90/L4	m550-P100/M4 m550-P100/L4	m550-P112/M4
Power connection/brake connection				
Terminal box	●	●	●	●
ICN connector M23	●	●	●	●
HAN 10E connector	●	●	●	●
HAN modular connector	●	●	●	●
Feedback connection				
Terminal box	●	●	●	●
ICN connector M23	●	●	●	●
ICN connector M12	●	●	●	●
Blower connection				
Terminal box	●	●	●	●
ICN connector M17	●	●	●	●
Temperature sensor connection				
Terminal box	●	●	●	●
ICN connector M23	●	●	●	●
HAN 10E connector	●	●	●	●
HAN modular connector	●	●	●	●

Product	m550-P132/M4 m550-P132/L4	m550-P160/M4 m550-P160/L4	m550-P180/M4 m550-P180/L4 m550-P180/V4
Power connection/brake connection			
Terminal box	●	●	●
ICN connector M23	●		
HAN 10E connector			
HAN modular connector	●	●	
Feedback connection			
Terminal box	●	●	●
ICN connector M23	●		
ICN connector M12	●	●	●
Blower connection			
Terminal box	●	●	●
ICN connector M17	●	●	●
Temperature sensor connection			
Terminal box	●	●	●
ICN connector M23	●		
HAN 10E connector			
HAN modular connector	●	●	

[1] Connection for IG128-24V-H incremental encoder
[2] TCO or PTC connected in the power connection and KTY connected in the feedback connection.

Motor connection

Assignment: motor terminal box - built-on accessories

► Depending on the motor version, terminal boxes of different sizes (KK1 ... KK4) are used.

Product	m550-P80/M4	m550-P90/M4 m550-P90/L4	m550-P100/M4 m550-P100/L4	m550-P112/M4
Built-on accessories with 1 thermal sensor				
Without	KK1 KK1 + ICN HAN 10 E HAN modular	KK1 KK1 + ICN HAN 10 E HAN modular	KK1 KK1 + ICN HAN 10 E HAN modular	KK1 KK1 + ICN HAN 10 E HAN modular
Feedback	KK2 KK2 + ICN	KK2 KK2 + ICN	KK2 KK2 + ICN	KK2 KK2 + ICN
Brake	KK2 KK2 + ICN HAN 10 E HAN modular	KK2 KK2 + ICN HAN 10 E HAN modular	KK2 KK2 + ICN HAN 10 E HAN modular	KK2 KK2 + ICN HAN 10 E HAN modular
Brake + Feedback	KK3 KK2 + ICN	KK3 KK2 + ICN	KK3 KK2 + ICN	KK3 KK2 + ICN
Built-on accessories with 2 thermal sensors				
Without	KK2	KK2	KK2	KK2
Feedback	KK2	KK2	KK2	KK2
Brake (2-pole terminal)	KK2	KK2	KK2	KK2
Brake (rectifier)	KK3	KK3	KK3	KK3
Brake + Feedback	KK3	KK3	KK3	KK3

Product	m550-P132/M4 m550-P132/L4	m550-P160/M4 m550-P160/L4	m550-P180/M4 m550-P180/V4 m550-P180/L4
Built-on accessories with 1 thermal sensor			
Without	KK3 KK3 + ICN HAN modular	KK4 HAN modular	KK4
Feedback	KK3 KK3 + ICN	KK4	KK4
Brake	KK3 KK3 + ICN HAN modular	KK4 HAN modular	KK4
Brake + Feedback	KK3 KK3 + ICN	KK4	KK4
Built-on accessories with 2 thermal sensors			
Without	KK3	KK4	KK4
Feedback	KK3	KK4	KK4
Brake (2-pole terminal)	KK3	KK4	KK4
Brake (rectifier)	KK3	KK4	KK4
Brake + Feedback	KK3	KK4	KK4

Motor connection

Position of cable entry/connector

For geared motors, the position of the cable entry must be selected as a function of the terminal box position.

Terminal box positions 2 ... 5	Cable entry positions 1 ... 5
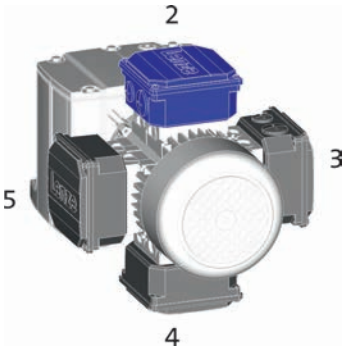	

Terminal box position	2	3	4	5
	Cable entry positions			
KK1	1/3/5*	1/2*/4	1/3*/5	1/2/4*
KK2	3+5	2+4	3+5	2+4
KK3	3+5	2+4	3+5	2+4
KK4	3+5	2+4	3+5	2+4
	Connector position			
HAN	1/3/5	1/2/4	1/3/5	1/2/4
KK1 + ICN	1/3/5*	1/2*/4	1/3*/5	1/2/4*
KK2 + ICN	3/5*	2*/4	3/5*	2/4*

- ► If preferred positions are not specified in the order, the cable entry will be positioned as indicated by * on the diagram below.
- ► If preferred positions are not specified in the order, the connector will be positioned as indicated by * on the diagram below.

Connection via terminal box

Dimensions of KK1

The connection in the terminal box is implemented by means of conventional cable glands.

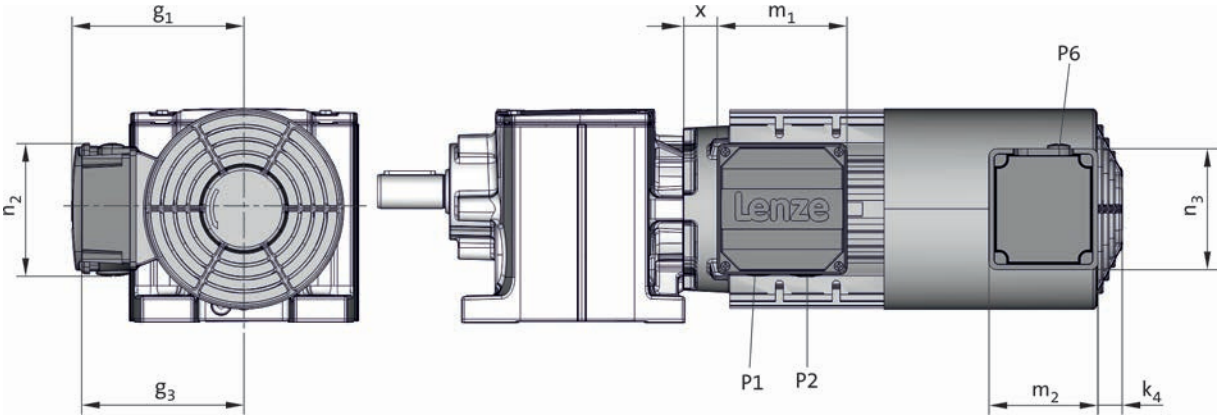

Product			m550			
			-P80/M4	-P90/L4 -P90/M4	-P100/L4 -P100/M4	-P112/M4
Dimensions						
	x	[mm]	17	38	48	44
	g_1	[mm]	149	156	165	173
	m_1	[mm]	115			
	n_2	[mm]	115			
	P_1	[mm]	M20x1.5			
	P_2	[mm]	M25x1.5			
	k_4	[mm]	13	22		
	g_3	[mm]	132	141	150	162
	m_2	[mm]	95			
	n_3	[mm]	105			
	P_6	[mm]	1x M16x1.5			

Connection via terminal box

Dimensions of KK2

The connection in the terminal box is implemented by means of conventional cable glands.

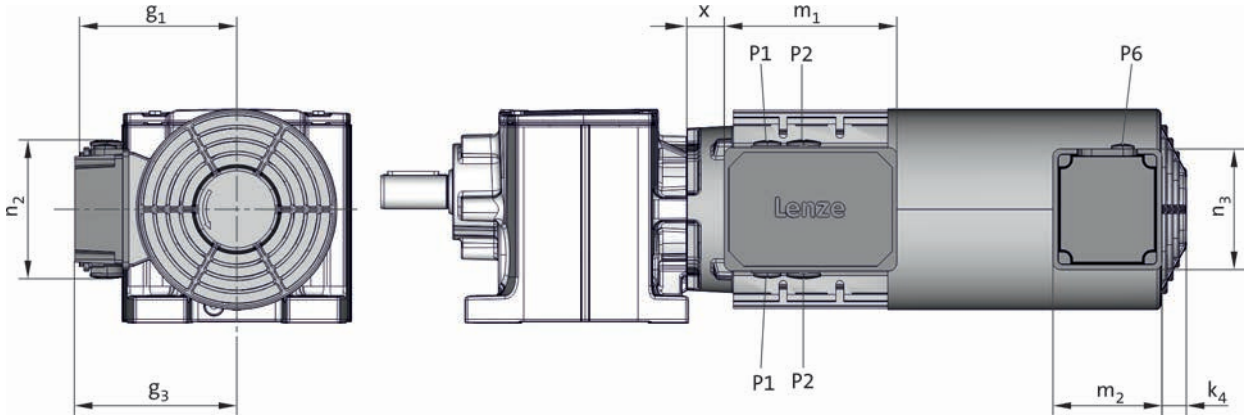

Product			m550			
			-P80/M4	-P90/L4 -P90/M4	-P100/L4 -P100/M4	-P112/M4
Dimensions						
	x	[mm]	20	41	51	47
	g_1	[mm]	137	144	153	161
	m_1	[mm]	152			
	n_2	[mm]	121			
	P_1	[mm]	M20x1.5			
	P_2	[mm]	M25x1.5			
	k_4	[mm]	13	22		
	g_3	[mm]	132	141	150	162
	m_2	[mm]	95			
	n_3	[mm]	105			
	P_6	[mm]	1x M16x1.5			

Connection via terminal box

Dimensions of KK3

The connection in the terminal box is implemented by means of conventional cable glands.

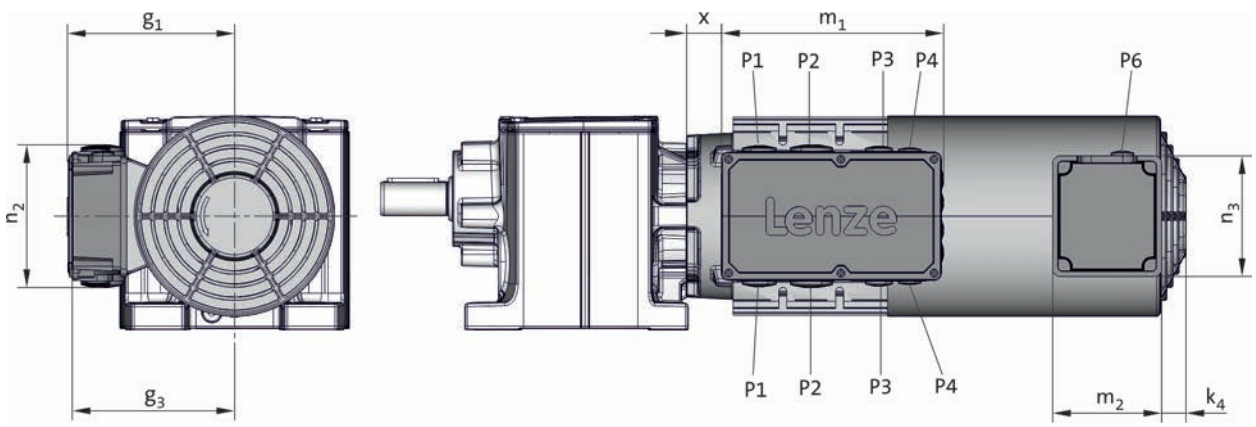

Product			m550				
			-P80/M4	-P90/L4 -P90/M4	-P100/L4 -P100/M4	-P112/M4	-P132/L4 -P132/M4
Dimensions							
	x	[mm]	19	40	50	46	76
	g_1	[mm]	147	154	163	171	182
	m_1	[mm]	198				
	n_2	[mm]	125				
	P_1	[mm]	M25x1.5				
	P_2	[mm]	M32x1.5				
	P_3	[mm]	M20x1.5				
	P_4	[mm]	M16x1.5				
	k_4	[mm]	13	22			32
	g_3	[mm]	132	141	150	162	182
	m_2	[mm]	95				
	n_3	[mm]	105				
	P_6	[mm]	1x M16x1.5				

Connection via terminal box

Dimensions of KK4

The connection in the terminal box is implemented by means of conventional cable glands.

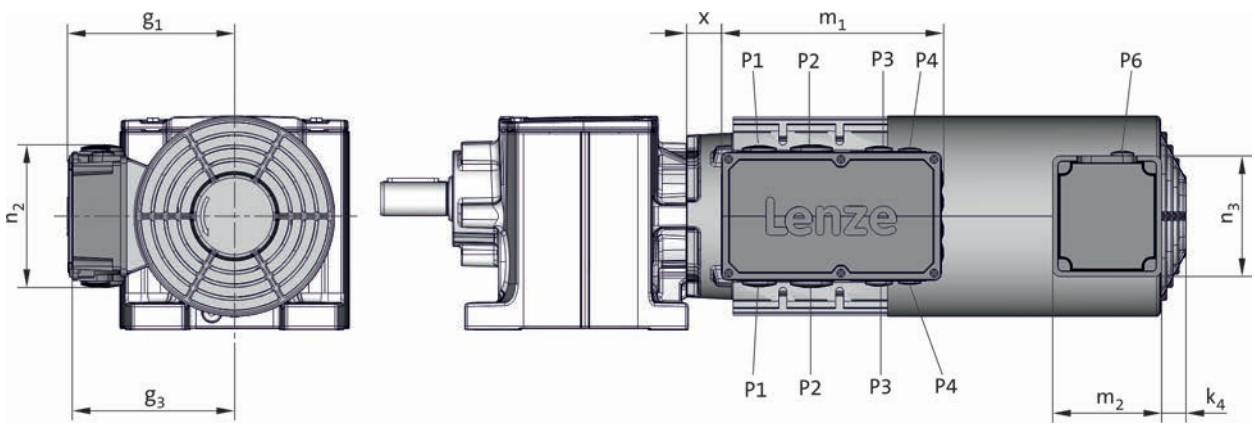

Product			m550	
			-P160/M4 -P160/L4	-P180/M4 -P180/L4 -P180/V4
Dimensions				
	x	[mm]	104	134
	g_1	[mm]	231	282
	m_1	[mm]	255	
	n_2	[mm]	152	
	P_1	[mm]	M50x1.5	
	P_2	[mm]	M40x1.5	
	P_3	[mm]	M20x1.5	
	P_4	[mm]	M16x1.5	
	k_4	[mm]	34	
	g_3	[mm]	209	
	m_2	[mm]	105	
	n_3	[mm]	105	
	P_6	[mm]	1x M16x1.5	

Connections via ICN connectors

A connector is used for the power connection, connection of the brake, and the temperature monitoring connection.
The feedback and blower connections are implemented via a separate connector in each case.

Connection for power, brake and temperature monitoring

For the power connection of the connector, a max. rated motor current of 16 A is permissible.
The connectors can be rotated by 270° and are equipped with a bayonet catch for SpeedTec connectors. As the connector fixing is also compatible with conventional box nuts, existing mating connectors can still be used without difficulty. The motor connection is determined in the terminal box.

ICN M23 6-pole

► No temperature monitoring connection possible!
If a feedback is used, the thermal detector KTY connection can be realised in the separate connection of the feedback (ICN M23 connector).

Pin assignment			
Contact	Designation	Meaning	
1	BD1 / BA1	Brake +/AC	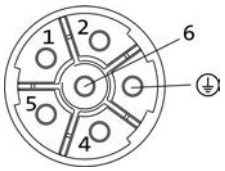
2	BD2 / BA2	Brake -/AC	
PE	PE	PE conductor	
4	U	Phase U power	
5	V	Phase V power	
6	W	Phase W power	

ICN M23 8-pole

Pin assignment			
Contact	Designation	Meaning	
1	U	Phase U power	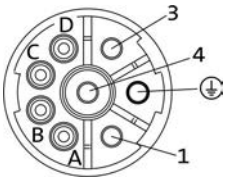
PE	PE	PE conductor	
3	W	Phase W power	
4	V	Phase V power	
A	TB1 / TP1 / R1	Thermal sensor: TKO/PTC/ +KTY	
B	TB2 / TP2 / R2	Thermal sensor: TKO/PTC/-KTY	
C	BD1 / BA1	Brake +/AC	
D	BD2 / BA2	Brake -/AC	

Connections via ICN connectors

Blower connection

The blower is also optionally available with an ICN connector fixed to the terminal box of the blower for exceptionally fast commissioning. The connectors are fitted with a bayonet fixing, which is also compatible with conventional union nuts. Existing counter plugs can therefore continue to be used without difficulty.

For the blower, the terminal box cover including the connector can be rotated by 90 ° step by step, if required.

ICN M17 for 1-ph blower

Pin assignment			
Contact	Designation	Meaning	
PE	PE	PE conductor	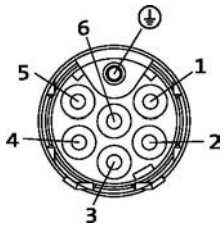
1	U1	Fan	
2	U2		
3		Not assigned	
4			
5			
6			

ICN M17 for 3-ph blower

Pin assignment			
Contact	Designation	Meaning	
PE	PE	PE conductor	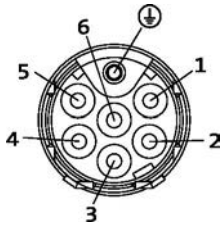
1	U	Phase U power	
2		Not assigned	
3	V	Phase V power	
4		Not assigned	
5			
6	W	Phase W power	

Connections via ICN connectors

Feedback connection

All encoder systems (apart from IG128-24V-H) are also available with an ICN connector fixed to the motor terminal box for exceptionally fast commissioning. The connectors are fitted with a bayonet fixing, which is also compatible with conventional union nuts. Existing mating connectors can therefore continue to be used without difficulty.
The feedback connector is located on the terminal box side opposite to the power connection

ICN M23 for resolver

Pin assignment			
Contact	Designation	Meaning	
1	+Ref	Transformer windings	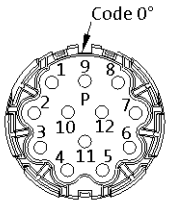
2	-Ref		
3	+VCC ETS	Supply: Electronic nameplate	
4	+COS	Cosine stator windings	
5	-COS		
6	+SIN	Sine stator windings	
7	-SIN		
8		Not assigned	
9			
10			
11	+KTY	KTY temperature sensor	
12	-KTY		

ICN M23 for incremental encoder and SinCos absolute value encoder hiperface

Pin assignment			
Contact	Designation	Meaning	
1	B	Track B/+SIN	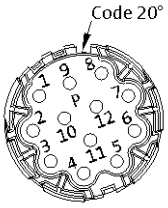
2	A^-	Track A inverse/-COS	
3	A	Track A/+COS	
4	$+U_B$	Supply +	
5	GND	Mass	
6	Z^-	Zero track inverse/-RS485	
7	Z	Zero track/+RS485	
8		Not assigned	
9	B^-	Track B inverse/-SIN	
10		Not assigned	
11	+KTY	KTY temperature sensor	
12	-KTY		

Connections via ICN connectors

Dimensions KK1+ICN

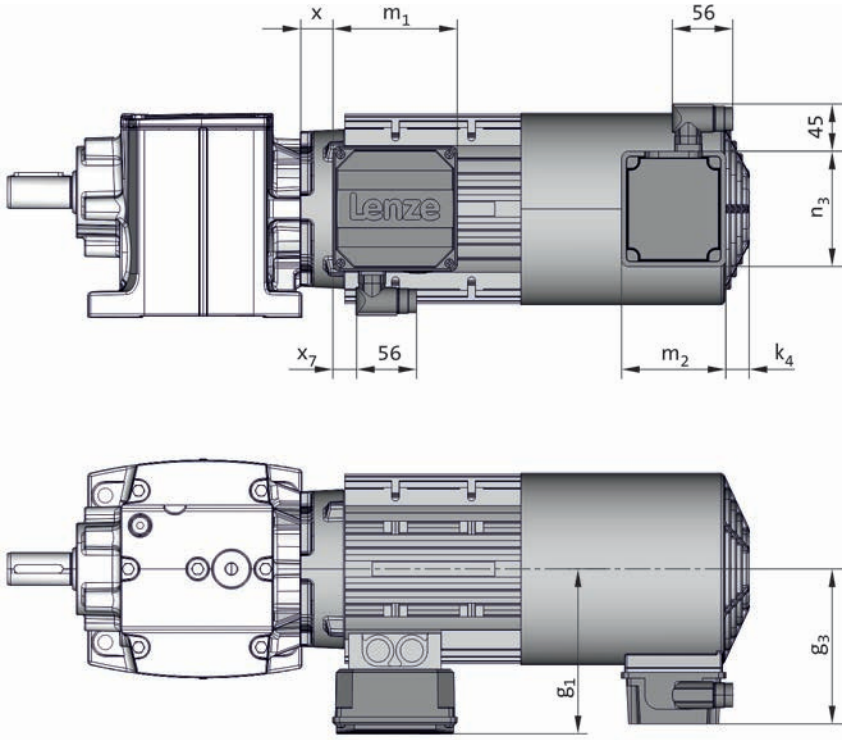

Product			m550			
			-P80/M4	-P90/L4 -P90/M4	-P100/L4 -P100/M4	-P112/M4
Dimensions						
	x	[mm]	17	38	48	44
	g_1	[mm]	149	156	165	173
	m_1	[mm]	115			
	n_2	[mm]	115			
	x_7	[mm]	23			
	k_4	[mm]	13	22		
	g_3	[mm]	132	141	150	162
	m_2	[mm]	95			
	n_3	[mm]	105			

Connections via ICN connectors

Dimensions KK2+ICN and KK3+ICN

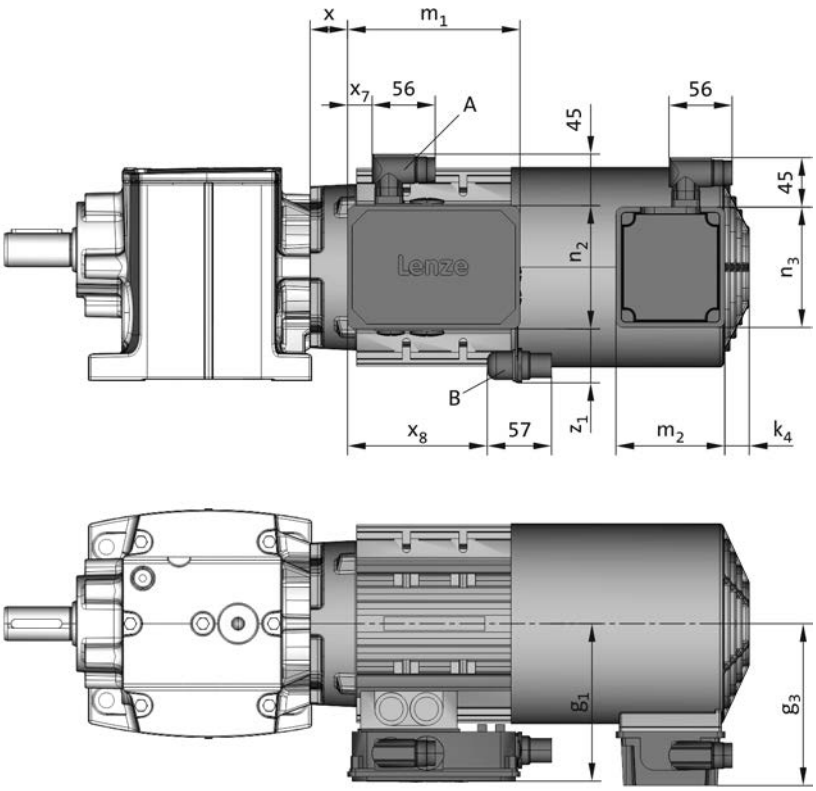

Product			m550				
			-P80/M4	-P90/L4 -P90/M4	-P100/L4 -P100/M4	-P112/M4	-P132/L4 -P132/M4
Dimensions							
	x	[mm]	20	41	51	47	76
	g_1	[mm]	137	144	153	161	182
	m_1	[mm]	152				198
	n_2	[mm]	121				125
	x_7	[mm]	23				27
	x_8	[mm]	125				166
	$z_{1, max}$	[mm]	41				71
	k_4	[mm]	13	22			32
	g_3	[mm]	132	141	150	162	182
	m_2	[mm]	95				
	n_3	[mm]	105				

A= power connection
B= feedback connection (not for KK1)

Connection via ICN M12 connector

IG128-24V-H incremental encoder connection

As a standard this incremental encoder is equipped with a connection cable of about 0.5 m length and with a common industry standard M12 connector at its end.

Pin assignment			
Contact	Designation	Meaning	
1	$+U_B$	Supply +	
2	B	Track B	
3	GND	Mass	
4	A	Track A	

Connections via HAN connectors

HAN 10 E

In the case of the rectangular HAN 10E connectors, all six ends of the three winding phases are taken out to the power contacts. The motor circuit is therefore determined in the mating connector.

Pin assignment	
Contact	Meaning
1	Terminal board: U1
2	Terminal board: V1
3	Terminal board: W1
4	Brake +/AC
5	Brake -/AC
6	Terminal board: W2
7	Terminal board: U2
8	Terminal board: V2
9	Thermal sensor: +KTY/PTC/TKO
10	Thermal sensor: KTY/PTC/TKO

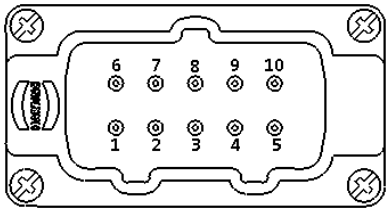

Connections via HAN connectors

HAN modular

The connector is available with two different power modules (16 A or 40 A), depending on the rated motor current. The motor connection is determined in the terminal box and must be checked before commissioning.

► HAN modular 16 A

Pin assignment			
Module	Contact	Meaning	
A	1	Terminal board: U1	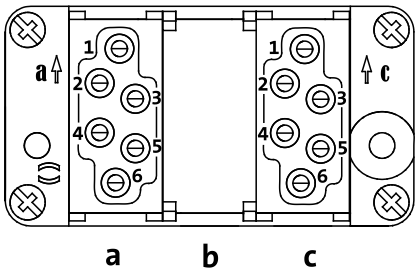
	2	Terminal board: V1	
	3	Terminal board: W1	
B		Dummy module	
C	1	Thermal sensor: +KTY/PTC/TKO	
	2	Brake +/AC	
	3	Brake -/AC	
	4	Rectifier: Switching contact	
	5		
	6	Thermal sensor: KTY/PTC/TKO	

► HAN modular 40 A

Pin assignment			
Module	Contact	Meaning	
A	1	Terminal board: U1	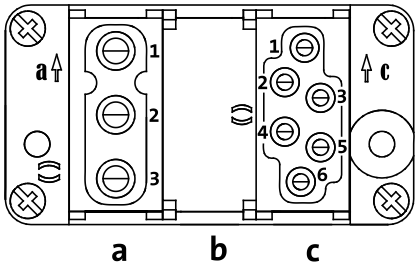
	2	Terminal board: V1	
	3	Terminal board: W1	
B		Dummy module	
C	1	Thermal sensor: +KTY/PTC/TKO	
	2	Brake +/AC	
	3	Brake -/AC	
	4	Rectifier: Switching contact	
	5		
	6	Thermal sensor: KTY/PTC/TKO	

Connections via HAN connectors

Dimensions

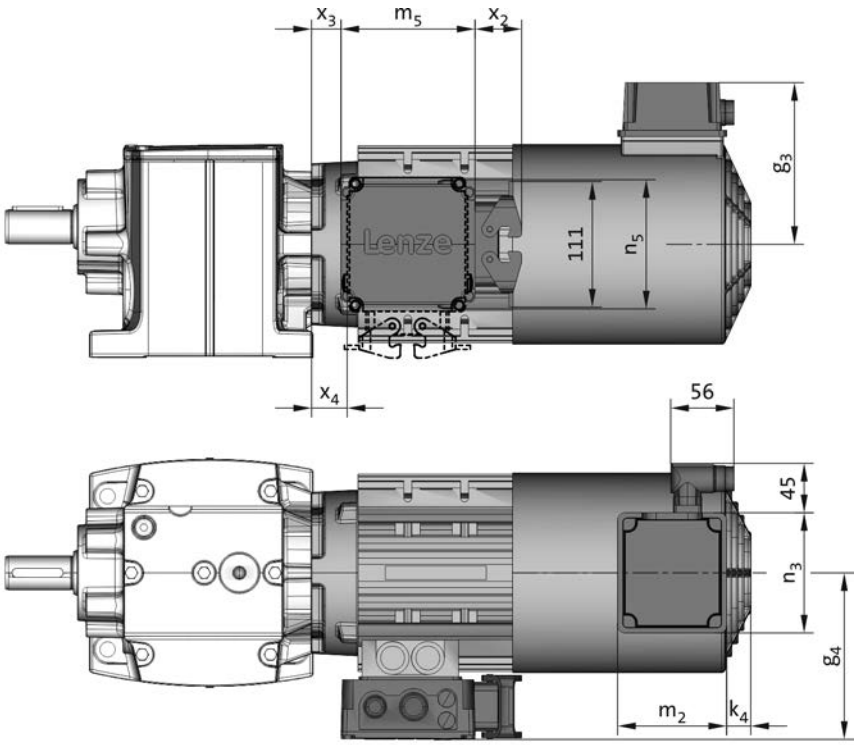

Product			m550				
			-P80/M4	-P90/M4 -P90/L4	-P100/M4 -P100/L4	-P112/M4	-P132/M4 -P132/L4
Dimensions							
	g_4	[mm]	148	152	161	169	227
	x_3	[mm]	13	33	43	41	72
	x_4	[mm]	17	37	47	44	42
	x_2	[mm]	41				47
	m_5	[mm]	118				120
	n_5	[mm]	102				180
	k_4	[mm]	13	22			32
	g_3	[mm]	132	141	150	162	182
	m_2	[mm]	95				
	n_3	[mm]	105				

Spring-applied brake

The three-phase AC motors can be equipped with a spring-applied brake which is active when the supply voltage has been switched off (closed-circuit principle). In the deenergised state, the brake is applied. This prevents possible movement of the motor shaft with regard to the load after switch-off or in the event of a power failure.
For optimum adaptation of the brake motor to the application, several brake sizes and control variants are provided for each motor.

Versions

- **Standard**
  - 1 x 10^6 repeating switching cycles
  - 1 x 10^6 reversing switching cycles
- **LongLife**
  - 10 x 10^6 repeating switching cycles
  - 15 x 10^6 reversing switching cycles

Braking torques

In addition to the standard braking torque, depending on the brake size, the possibility of choosing between a reduced and an increased braking torque is provided.

- When the braking torque is reduced, great wear reserves can be attained. This is enabled by a reduction of the spring rate.
- In order to obtain a greater braking torque, the spring rate is increased. This is practical, for instance, for hoists, since here the gravity acts as an additional acceleration in the negative direction.

Manual release

By using the manual release lever, the brake can be released manually in deenergised operating state. The manual release makes positioning and maintenance work easier.

Spring-applied brake

Direct connection without rectifier

If the brake is activated directly without a rectifier, a freewheeling diode or a spark suppressor is required for protection against induction peaks.

- Supply voltages
  DC 24 V

Connection via mains voltage with brake rectifier

If the brake is not directly supplied with DC voltage, a rectifier is required. This is included in the scope of supply and is located in the terminal box of the motor. The rectifier converts the AC voltage of the connection into DC voltage. The following rectifiers are available:

Rectifier, 6-pole

- Approval UL / CSA
- Supply voltages
  AC 230 V
  AC 400 V
  AC 460 V

Bridge/half-wave rectifier, 6-pole

- Supply voltage / brake coil voltage ratio
  up to the overexcitation time = 1.11
  From the overexcitation time = 2.22
- Supply voltages
  AC 230 V
  AC 400 V

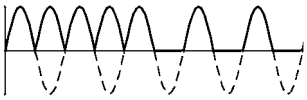

During the switching operation the bridge/half-wave rectifier functions as a bridge rectifier for the overexcitation time $t_{ü}$ and then as a half-wave rectifier. This combination optimises the performance of the brake – depending on the assignment of brake coil voltage and supply voltage:

- **Short-time overexcitation of the brake coil**
  Activating the brake coil for the overexcitation time $t_{ü}$ with twice the rated voltage allows the disengagement time to be reduced. The brake opens more quickly and wear on the friction lining is reduced.
  These features make this activation version particularly suitable for lifting applications. It is therefore only available in combination with a brake with increased braking torque.
- **Holding current reduction (cold brake)**
  By reducing the holding current, the bridge/half-wave rectifier is able to reduce the power input to the open brake. As the brake heats up less, this type of activation is known as "cold brake".

Spring-applied brake

Assignment of 4-pole motors and brakes

Design	Standard		LongLife	
Product	Size	Rated torque	Size	Rated torque
	Brake		Brake	
		M_k		M_k
		[Nm]		[Nm]
m550-P80/M4	08 08 10	3.50 8.00 7.00	08 10	8.00 7.00
m550-P90/M4 m550-P90/L4	08 08 10 10 10	3.50 8.00 7.00 16.0 23.0	08 10 10	8.00 7.00 16.0
m550-P100/M4	10 10 12 12	7.00 16.0 14.0 32.0	10 12 12	16.0 14.0 32.0
m550-P100/L4	10 10 12 12 12	7.00 16.0 14.0 32.0 46.0		
m550-P112/M4	12 12 14 14	14.0 32.0 35.0 60.0		
m550-P132/M4	14 14 16 16	35.0 60.0 60.0 80.0		
m550-P132/L4	14 14 16 16 16	35.0 60.0 60.0 80.0 100		

Spring-applied brake

Assignment of 4-pole motors and brakes

Design	Standard		LongLife	
Product	**Size**	**Rated torque**	**Size**	**Rated torque**
	Brake		Brake	
		M_k		M_k
		[Nm]		[Nm]
m550-P160/M4	16 16 18 18	60.0 80.0 80.0 150		
m550-P160/L4	18 18 18	80.0 150 200		
m550-P180/M4	18 18 20 20	80.0 150 145 260		
m550-P180/L4	18 18 20 20 20	80.0 150 145 260 315		
m550-P180/V4 m550-P200/M4	18 18 20 20 20 20	80.0 150 145 260 315 400		
m550-P225/M4	25 25 25	265 400 490		
m550-P225/L4	25 25 25 25	265 400 490 600		

Spring-applied brake

Permissible friction energy

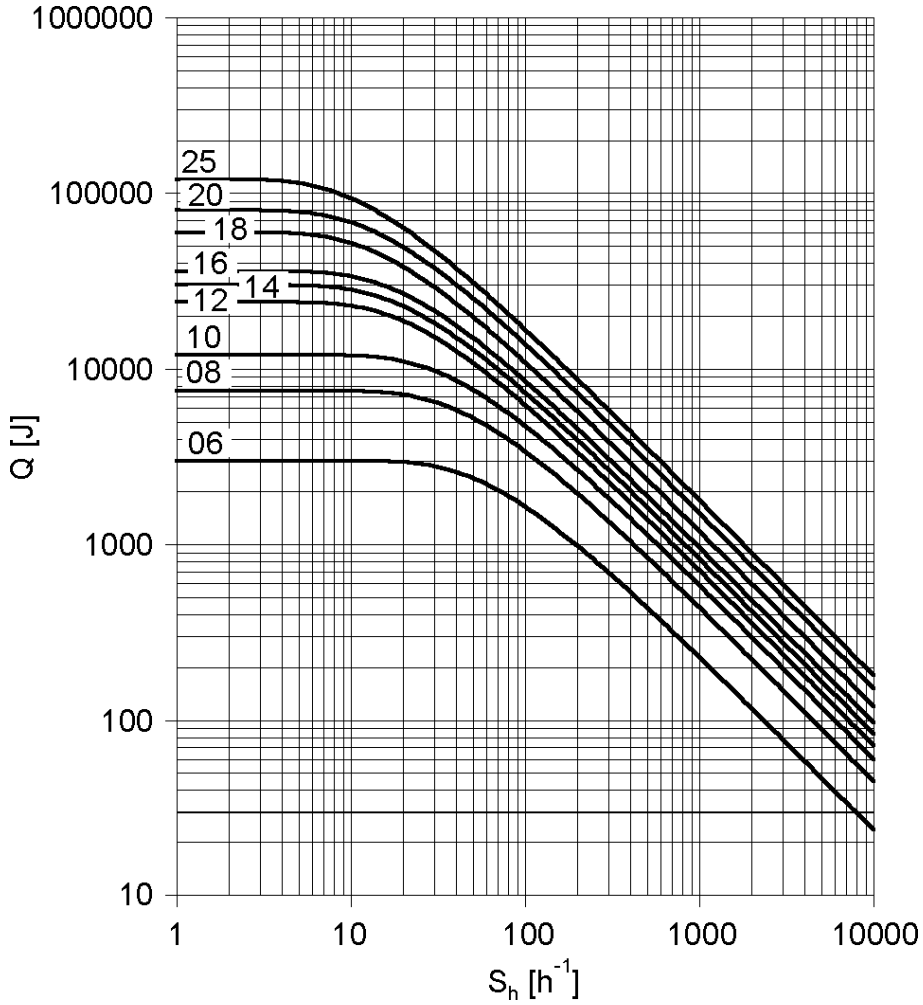

Q =Switching energy per switching cycle
S_h =Operating frequency
Brake size = 06 to 25

Spring-applied brake

Rated data with reduced braking torque

- ► In case of the braking torque and the maximum switching energy, the unit for the values (100 ... 3600) is rpm.
- ► Please enquire for braking torques and maximum switching work values not listed here.

Size			06	08	10	12	14	16	18	20	25
Power input											
	P_{in}	[kW]	0.020	0.025	0.030	0.040	0.050	0.055	0.085	0.10	0.11
Braking torque											
100	M_B	[Nm]	2.50	3.50	7.00	14.0	35.0	60.0	80.0	145	265
1000	M_B	[Nm]	2.30	3.10	6.10	12.0	30.0	50.0	65.0	115	203
1200	M_B	[Nm]	2.30	3.10	6.00	12.0	29.0	48.0	63.0	112	199
1500	M_B	[Nm]	2.20	3.00	5.80	11.0	28.0	47.0	61.0	109 [1]	193 [1]
1800	M_B	[Nm]	2.10	2.90	5.70	11.0	28.0	46.0	60.0 [1]		
3000	M_B	[Nm]	2.00	2.80	5.30	10.0	26.0 [1]	43.0 [1]			
3600	M_B	[Nm]	2.00	2.70	5.20	10.0 [1]					
Maximum switching energy											
100	Q_E	[KJ]	3.00	7.50	12.0	24.0	30.0	36.0	60.0	80.0	120
1000	Q_E	[KJ]	3.00	7.50	12.0	24.0	30.0	36.0	60.0	80.0	120
1200	Q_E	[KJ]	3.00	7.50	12.0	24.0	30.0	36.0	60.0	80.0	120
1500	Q_E	[KJ]	3.00	7.50	12.0	24.0	30.0	36.0	60.0	24.0 [1]	36.0 [1]
1800	Q_E	[KJ]	3.00	7.50	12.0	24.0	30.0	36.0	36.0 [1]		
3000	Q_E	[KJ]	3.00	7.50	12.0	24.0	18.0 [1]	11.0 [1]			
3600	Q_E	[KJ]	3.00	7.50	12.0	7.00 [1]					
Transition operating frequency											
	$S_{hü}$	[1/h]	79.0	50.0	40.0	30.0	28.0	27.0	20.0	19.0	15.0
Moment of inertia											
	J	[kgcm²]	0.15	0.61	2.00	4.50	6.30	15.0	29.0	73.0	200
Mass											
	m	[kg]	0.90	1.50	2.60	4.20	5.80	8.70	12.6	19.5	31.0

[1] In the region of the load limit the value for friction energy Q_{BW} can be reduced to 40 %.

Spring-applied brake

Rated data with reduced braking torque

► Activation via half-wave or bridge rectifier

Size											
			06	08	10	12	14	16	18	20	25
Friction energy											
	Q_{BW}	[MJ]	113	210	264	706	761	966	1542	2322	3522
Delay time											
Engaging	t_{11}	[ms]	11.0	14.0	20.0	21.0	37.0	53.0	32.0	47.0	264
Rise time											
Braking torque	t_{12}	[ms]	13.0	10.0	17.0	19.0	22.0	30.0	20.0	100	120
Engagement time											
	t_1	[ms]	24.0		37.0	40.0	59.0	83.0	52.0	147	384
Disengagement time											
	t_2	[ms]	35.0	37.0	57.0	65.0	148	169	230	207	269

► Activation via bridge/half-wave rectifier

Design											
			Holding current reduction (cold brake)								
Size											
			06	08	10	12	14	16	18	20	25
Friction energy											
	Q_{BW}	[MJ]	113	210	264	706	761	966	1542	2322	3522
Overexcitation time											
	$t_{ü}$	[ms]	300				1300				
Min. rest time											
	t	[ms]	900				3900				
Delay time											
Engaging	t_{11}	[ms]	12.0	22.0	35.0	49.0	61.0	114	83.0	126	304
Rise time											
Braking torque	t_{12}	[ms]	14.0	16.0	30.0	45.0	37.0	65.0	52.0	269	138
Engagement time											
	t_1	[ms]	26.0	38.0	66.0	93.0	97.0	180	134	395	443
Disengagement time											
	t_2	[ms]	35.0	37.0	57.0	65.0	148	169	230	207	269

► The brake response and application times are guide values. The engagement time is 10 times longer with AC-side switching. With the maximum air gap the disengagement time t_2 – depending on the brake and control – is up to 4 times longer than the disengagement time with the rated air gap.

Spring-applied brake

Rated data with standard braking torque

- ► In case of the braking torque and the maximum switching energy, the unit for the values (100 ... 3600) is rpm.
- ► Please enquire for braking torques and maximum switching work values not listed here.

Size			06	08	10	12	14	16	18	20	25
Power input											
	P_{in}	[kW]	0.020	0.025	0.030	0.040	0.050	0.055	0.085	0.10	0.11
Braking torque											
100	M_B	[Nm]	4.00	8.00	16.0	32.0	60.0	80.0	150	260	400
1000	M_B	[Nm]	3.70	7.20	14.0	27.0	51.0	66.0	121	206	307
1200	M_B	[Nm]	3.60	7.00	14.0	27.0	50.0	65.0	118	201	300
1500	M_B	[Nm]	3.50	6.80	13.0	26.0	48.0	63.0	115	195 [1]	291 [1]
1800	M_B	[Nm]	3.40	6.70	13.0	26.0	47.0	61.0	112 [1]		
3000	M_B	[Nm]	3.20	6.30	12.0	24.0	44.0 [1]	57.0 [1]			
3600	M_B	[Nm]	3.20	6.10	12.0	23.0 [1]					
Maximum switching energy											
100	Q_E	[KJ]	3.00	7.50	12.0	24.0	30.0	36.0	60.0	80.0	120
1000	Q_E	[KJ]	3.00	7.50	12.0	24.0	30.0	36.0	60.0	80.0	120
1200	Q_E	[KJ]	3.00	7.50	12.0	24.0	30.0	36.0	60.0	80.0	120
1500	Q_E	[KJ]	3.00	7.50	12.0	24.0	30.0	36.0	60.0	24.0 [1]	36.0 [1]
1800	Q_E	[KJ]	3.00	7.50	12.0	24.0	30.0	36.0	36.0 [1]		
3000	Q_E	[KJ]	3.00	7.50	12.0	24.0	18.0 [1]	11.0 [1]			
3600	Q_E	[KJ]	3.00	7.50	12.0	7.00 [1]					
Transition operating frequency											
	$S_{hü}$	[1/h]	79.0	50.0	40.0	30.0	28.0	27.0	20.0	19.0	15.0
Moment of inertia											
	J	[kgcm²]	0.15	0.61	2.00	4.50	6.30	15.0	29.0	73.0	200
Mass											
	m	[kg]	0.90	1.50	2.60	4.20	5.80	8.70	12.6	19.5	31.0

[1] In the region of the load limit the value for friction energy Q_{BW} can be reduced to 40 %.

Spring-applied brake

Rated data with standard braking torque

► Activation via half-wave or bridge rectifier

Size			06	08	10	12	14	16	18	20	25
Friction energy											
	Q_{BW}	[MJ]	85.0	158	264	530	571	966	1542	2322	3522
Delay time											
Engaging	t_{11}	[ms]	15.0		28.0		17.0	27.0	33.0	65.0	110
Rise time											
Braking torque	t_{12}	[ms]	13.0	16.0	19.0	25.0		30.0	45.0	100	120
Engagement time											
	t_1	[ms]	28.0	31.0	47.0	53.0	42.0	57.0	78.0	165	230
Disengagement time											
	t_2	[ms]	45.0	57.0	76.0	115	210	220	270	340	390

► Activation via bridge/half-wave rectifier

Design			Holding current reduction (cold brake)								
Size			06	08	10	12	14	16	18	20	25
Friction energy											
	Q_{BW}	[MJ]	85.0	158	264	530	571	966	1542	2322	3522
Overexcitation time											
	$t_ü$	[ms]	300				1300				
Min. rest time											
	t	[ms]	900				3900				
Delay time											
Engaging	t_{11}	[ms]	16.0	25.0	31.0	48.0	33.0	58.0	80.0	102	154
Rise time											
Braking torque	t_{12}	[ms]	14.0	27.0	21.0	43.0	49.0	64.0	109	157	168
Engagement time											
	t_1	[ms]	30.0	52.0		90.0	82.0	122	189	259	322
Disengagement time											
	t_2	[ms]	45.0	57.0	76.0	115	210	220	270	340	390

► The brake response and application times are guide values. The engagement time is 10 times longer with AC-side switching. With the maximum air gap the disengagement time t_2 – depending on the brake and control – is up to 4 times longer than the disengagement time with the rated air gap.

Spring-applied brake

Rated data with increased braking torque

- ► In case of the braking torque and the maximum switching energy, the unit for the values (100 ... 3600) is rpm.
- ► Please enquire for braking torques and maximum switching work values not listed here.

Size			10	12	14	16	16	18	20	20	25	25
Power input												
	P_{in}	[kW]	0.030	0.040	0.050	0.055	0.055	0.085	0.10	0.10	0.11	0.11
Braking torque												
100	M_B	[Nm]	23.0	46.0	75.0	100	125	200	315	400	490	600
1000	M_B	[Nm]	20.0	39.0	64.0	83.0	103	162	249	317	376	461
1200	M_B	[Nm]	20.0	39.0	62.0	81.0	101	158	244	309	367	449
1500	M_B	[Nm]	19.0	38.0	60.0	78.0	98.0	153	237 [1]	300 [1]	356 [1]	436 [1]
1800	M_B	[Nm]	19.0	37.0	59.0	77.0	96.0	150 [1]				
3000	M_B	[Nm]	17.0	34.0	55.0 [1]	71.0 [1]	89.0 [1]					
3600	M_B	[Nm]	17.0	33.0 [1]								
Maximum switching energy												
100	Q_E	[KJ]	12.0	24.0	30.0	36.0	36.0	60.0	80.0	80.0	120	120
1000	Q_E	[KJ]	12.0	24.0	30.0	36.0	36.0	60.0	80.0	80.0	120	120
1200	Q_E	[KJ]	12.0	24.0	30.0	36.0	36.0	60.0	80.0	80.0	120	120
1500	Q_E	[KJ]	12.0	24.0	30.0	36.0	36.0	60.0	24.0 [1]	24.0 [1]	36.0 [1]	36.0 [1]
1800	Q_E	[KJ]	12.0	24.0	30.0	36.0	36.0	36.0 [1]				
3000	Q_E	[KJ]	12.0	24.0	18.0 [1]	11.0 [1]	11.0 [1]					
3600	Q_E	[KJ]	12.0	7.00 [1]								
Transition operating frequency												
	$S_{hü}$	[1/h]	40.0	30.0	28.0	27.0	27.0	20.0	19.0	19.0	15.0	15.0
Moment of inertia												
	J	[kgcm²]	2.00	4.50	6.30	15.0	15.0	29.0	73.0	73.0	200	200
Mass												
	m	[kg]	2.60	4.20	5.80	8.70	8.70	12.6	19.5	19.5	31.0	31.0

[1] In the region of the load limit the value for friction energy Q_{BW} can be reduced to 40 %.

- ► Activation via half-wave or bridge rectifier

Size			10	12	14	16		18	20		25	
Friction energy												
	Q_{BW}	[MJ]	198	353	253	563	241	578	1596	580	2465	1409
Delay time												
Engaging	t_{11}	[ms]	10.0	16.0	11.0	22.0	17.0	24.0	46.0	17.0	77.0	38.0
Rise time												
Braking torque	t_{12}	[ms]	19.0	25.0		30.0		45.0	100		120	
Engagement time												
	t_1	[ms]	29.0	41.0	36.0	52.0	47.0	69.0	146	117	197	158
Disengagement time												
	t_2	[ms]	109	193	308	297	435	356	378	470	451	532

Spring-applied brake

Rated data with increased braking torque

► Activation via bridge/half-wave rectifier

Design			Holding current reduction (cold brake)									
Size			10	12	14	16		18	20		25	
Friction energy												
	Q_{BW}	[MJ]	198	353	253	563	241	578	1596	580	2465	1409
Overexcitation time												
	$t_ü$	[ms]	300		1300							
Min. rest time												
	t	[ms]	900		3900							
Delay time												
Engaging	t_{11}	[ms]	24.0	27.0	17.0	41.0	21.0	60.0	69.0	17.0	123	85.0
Rise time												
Braking torque	t_{12}	[ms]	44.0	43.0	37.0	55.0	37.0	113	148	100	190	270
Engagement time												
	t_1	[ms]	68.0	70.0	54.0	97.0	57.0	173	217	334	313	355
Disengagement time												
	t_2	[ms]	109	193	308	297	435	356	378	470	451	532

Design			Over-excitation						
Size			10	12	14	16	18	20	25
Friction energy									
	Q_{BW}	[MJ]	264	706	761	966	1542	2322	3522
Overexcitation time									
	$t_ü$	[ms]	300		1300				
Min. rest time									
	t	[ms]	900		3900				
Delay time									
Engaging	t_{11}	[ms]	29.0	54.0	31.0	70.0	46.0	86.0	103	55.0	171	135
Rise time									
Braking torque	t_{12}	[ms]	53.0	87.0	68.0	93.0	83.0	160	222	319	266	430
Engagement time									
	t_1	[ms]	82.0	141	99.0	163	129	246	325	374	437	565
Disengagement time									
	t_2	[ms]	53.0	81.0	117	141	168	151	160	167	184	204

► The brake response and application times are guide values. The engagement time is 10 times longer with AC-side switching. With the maximum air gap the disengagement time t_2 – depending on the brake and control – is up to 4 times longer than the disengagement time with the rated air gap.

Spring-applied brake

Manual release

By using the manual release lever, the brake can be released manually in deenergised operating state. The manual release makes positioning and maintenance work easier.

Manual release lever

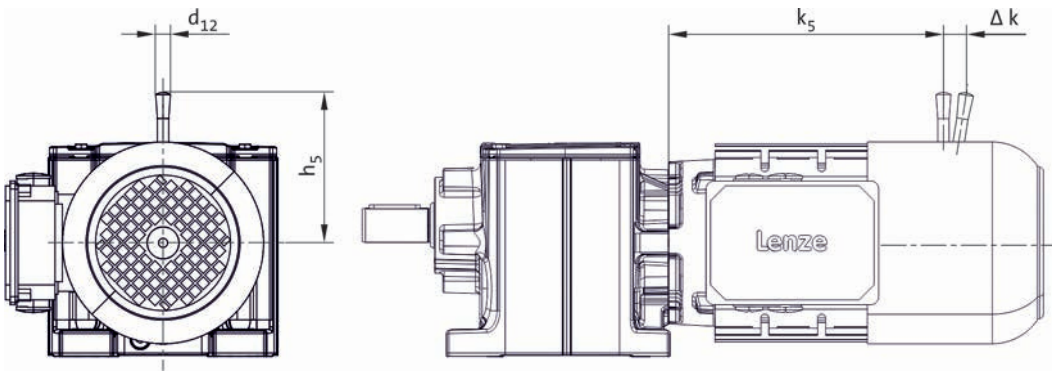

Product	Size	Dimensions			
	Brake				
		k_5	Δ k	h_5	d_{12}
		[mm]	[mm]	[mm]	[mm]
m550-P80/M4	08 10	243 254	27 28	116 132	13.0 13.0
m550-P90/M4 m550-P90/L4	08 10	291 302	27 28	116 132	13.0 13.0
m550-P100/M4 m550-P100/L4	10 12	355 359	28 37	132 161	13.0 13.0
m550-P112/M4	12 14	366 368	37 41	161 195	13.0 24.0
m550-P132/M4 m550-P132/L4	14 16	428 431	41 55	195 240	24.0 24.0
m550-P160/M4 m550-P160/L4	16 18	512 517	55 59	240 279	24.0 24.0
m550-P180/M4 m550-P180/L4	18 20	610 616	59 74	279 319	24.0 24.0
m550-P180/V4	18 20	654 660	59 74	279 319	24.0 24.0

The following combinations with manual release lever and motor connection in the same position are not possible:
- HAN connector with connection in position 1

Feedback

Depending on the application, the following resolvers, incremental encoders or absolute value encoders are provided for speed and position detection.

Resolver

The stator-supplied resolver with two stator windings shifted by 90° and a rotor winding with transformer winding can detect both the speed and the rotor position. The rotor position is retained in the event of a voltage failure.

► The three-phase AC motors with resolver cannot be used for speed-dependent safety functions in connection with the SM 301 safety module.

Product key				
				RS1
Accuracy				
			[']	-10 ... 10
Absolute positioning				
				1 revolution
Max. input voltage				
DC	$U_{in,max}$		[V]	10.0
Max. input frequency				
	$f_{in,max}$		[kHz]	4.00
Ratio				
Stator / rotor		± 5 %		0.30
Rotor impedance				
	Z_{ro}		[Ω]	51 + j90
Stator impedance				
	Z_{so}		[Ω]	102 + j150
Impedance				
	Z_{rs}		[Ω]	44 + j76
Min. insulation resistance				
At DC 500 V	R		[MΩ]	10.0
Number of pole pairs				
				1

Feedback

Incremental encoder and SinCos absolute value encoder

Incremental encoders can only be used for speed measurement, but not for speed control. Homing is required in order to enable positioning later.

Absolute value encoders can detect the speed, the rotor position, and the machine position with a very high resolution. They are used for the positioning of dynamic applications and do not require homing.

► The three-phase AC motors with incremental encoders or SinCos absolute value encoders cannot be used for speed-dependent safety functions in connection with the SM 301 safety module.

Encoder type			HTL incremental				TTL incremental			SinCos absolute value
Product key			IG128-24V-H	IG512-24V-H	IG1024-24V-H	IG2048-24V-H	IG512-5V-T	IG1024-5V-T	IG2048-5V-T	AM1024-8V-H
Encoder type										Multi-turn
Pulses			128	512	1024	2048	512	1024	2048	1024
Output signals			HTL				TTL			1 Vss
Interfaces			A, B track	A, B, N track and inverted						Hiperface
Absolute revolutions			0							4096
Accuracy		[′]	-22.5 ... 22.5	-2 ... 2						-0.8 ... 0.8
Min. input voltage										
DC	$U_{in,min}$	[V]	8.00				4.75			7.00
Max. input voltage										
DC	$U_{in,max}$	[V]	26.0	30.0			5.25			12.0
Max. current consumption										
	I_{max}	[A]	0.040	0.15						0.080
Limit frequency										
	f_{max}	[kHz]	30.0	160			300			200

Blower

During operation with the rated torque at low speeds (< 20 Hz), the integral fan does not rotate fast enough anymore to ensure sufficient cooling of the motor. In order to prevent overheating, operation without a blower requires a torque reduction of the motor.
The blower cools the motor steadily and irrespective of the motor speed. A torque reduction is not required and the motor can be actuated with its rated torque from 5 Hz to the rated frequency.

Rated data for 50 Hz

Product	Number of phases	Connection method					
			U_{min}	U_{max}	P_{max}	I_{max}	m
			[V]	[V]	[kW]	[A]	[kg]
m550-P80/M4	1		230	277	0.029	0.11	2.30
	3	Δ	200	303	0.031		
		Y	346	525		0.060	
m550-P90/M4 m550-P90/L4	1		220	277	0.065	0.29	2.70
	3	Δ	200	303	0.091	0.38	
		Y	346	525		0.22	
m550-P100/M4 m550-P100/L4	1		220	277	0.066	0.28	3.00
	3	Δ	200	303	0.091	0.37	
		Y	346	525		0.22	
m550-P112/M4	1		220	277	0.071	0.28	3.10
	3	Δ	200	303	0.097	0.35	
		Y	346	525		0.20	

Product	Number of phases	Connection method				
			$U_{N, AC}$	P_N	I_N	m
			[V]	[kW]	[A]	[kg]
m550-P132/L4 m550-P132/M4	1		230	0.095	0.42	5.00
	3	Δ		0.091	0.33	
		Y	400		0.19	
m550-P160/M4 m550-P160/L4	1		230	0.22	0.97	7.30
	3	Δ		0.21	0.68	
		Y	400		0.39	
m550-P180/M4 m550-P180/L4 m550-P180/V4	1		230	0.22	0.97	10.3
	3	Δ		0.21	0.68	
		Y	400		0.39	

Blower

Dimensions, 4-pole motors

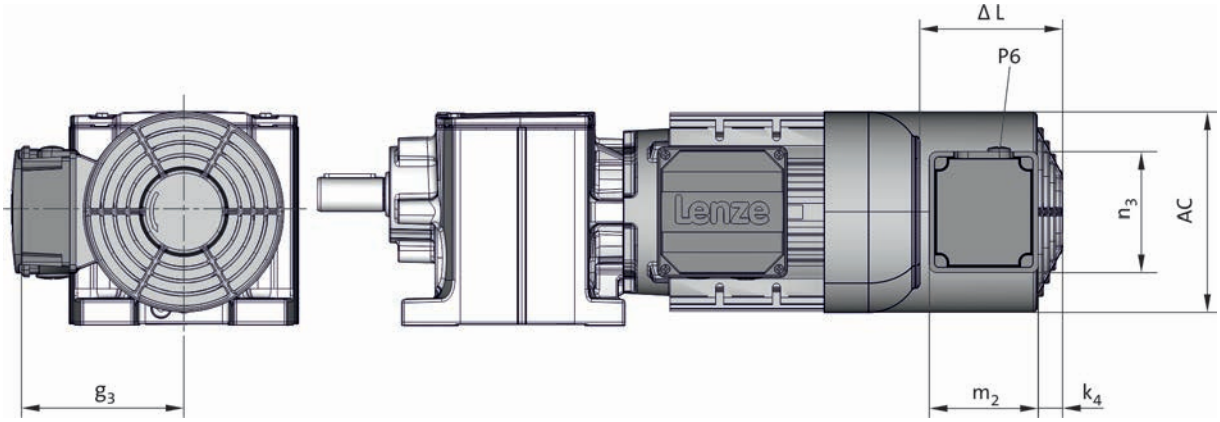

Built-on accessories					
	Without	Brake	Brake + Feedback	Feedback	

Product	Dimensions				
	Δ L	Δ L	Δ L	Δ L	AC
	[mm]	[mm]	[mm]	[mm]	[mm]
m550-P80/M4	127	183	183	127	157
m550-P90/M4 m550-P90/L4	122	175	175	122	177
m550-P100/M4 m550-P100/L4	109	170	170	109	195
m550-P112/M4	103	183	183	183	219
m550-P132/M4 m550-P132/L4	121	201	201	201	261
m550-P160/M4 m550-P160/L4	149	179	237	237	313
m550-P180/M4 m550-P180/L4 m550-P180/V4	141	207	267	207	351

Product	Dimensions				
	k_4	g_3	m_2	n_3	P_6
	[mm]	[mm]	[mm]	[mm]	[mm]
m550-P80/M4	13	132	95	105	1x M16x1.5
m550-P90/M4 m550-P90/L4	22	141			
m550-P100/M4 m550-P100/L4		150			
m550-P112/M4		162			
m550-P132/M4 m550-P132/L4	32	182			
m550-P160/M4 m550-P160/L4	34	209	105		
m550-P180/M4 m550-P180/L4 m550-P180/V4					

Temperature monitoring

To protect the motor against overheating, the following thermal sensors are provided.
The thermal sensors are integrated into the windings. We recommend using an additional motor protection switch.

TKO thermal contacts

The TCO thermal contact (thermal NC contact) is a bimetallic-element switch. The TCO monitors the motor winding temperature; at too high temperatures, the motor relay switches. The motor is disconnected from the mains.

Function	Operating temperature	Min. reset temperature	Max. reset temperature	Max. input current	Max. input voltage
					AC
	T	T_{min}	T_{max}	$I_{in,max}$	$U_{in,max}$
	-5 ... 5				
	[°C]	[°C]	[°C]	[A]	[V]
NC contact	150	90.0	135	2.50	250

PTC thermistor

The PTC thermistor is actuated in connection with a tripping unit. If the motor gets too hot, the motor can be switched off by means of a contactor. In contrast to the thermal contact, quick restart is possible.

Function	Operating temperature	Rated resistance			Standard
		155 °C	-20 °C	140 °C	
	T	R_N	R_N	R_N	
	-5 ... 5				
	[°C]	[Ω]	[Ω]	[Ω]	
Sudden change in resistance	150	550	30.0	250	DIN 44080 DIN VDE 0660 Part 303

Temperature monitoring

KTY temperature sensor

The KTY thermal detectors work as continuously variable resistors, showing a similar tendency as PTC thermistors. However, with an increasing temperature, the resistance only increases comparatively slowly, enabling the controller to determine the temperature at regular intervals and to already perform a process evaluation at an early stage. In this way, the motor can already be switched off before it is overheated.

	Function	Rated resistance			Max. input current	
		25 °C	150 °C	170 °C	25 °C	170 °C
		R_N	R_N	R_N	$I_{in,max}$	$I_{in,max}$
		[Ω]	[Ω]	[Ω]	[A]	[A]
KTY83-110	Continuous resistance change	1000	2225	2471	0.010	0.002
KTY84-130	Continuous resistance change	603	1334	1482	0.010	0.002

Variation of resistance

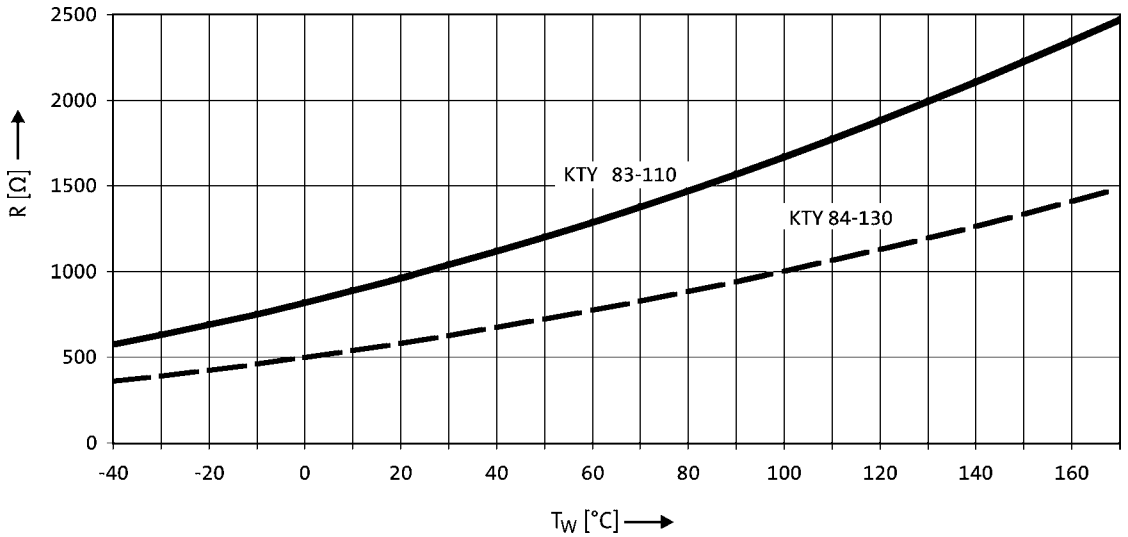

► If the thermal sensor is supplied with a measurement current of 1 mA, the above relationship between the temperature and the resistance applies.

Rated data for 50 Hz

4-pole motors

Product								
	P_N	n_N	n_{max}	M_N	M_a	M_b	J [1]	m [1]
	[kW]	[r/min]	[r/min]	[Nm]	[Nm]	[Nm]	[kgcm²]	[kg]
m540-P90/L4	1.50	1445	3600	9.91	26.8	35.7	49.0	15.0
m540-P100/M4	2.20	1465	3600	14.3	30.0	51.5	140	29.0
m540-P100/L4	3.00	1460	3600	19.6	45.1	72.5	140	29.0
m540-P112/M4	4.00	1460	3600	26.2	62.9	96.9	170	29.0
m540-P132/M4	5.50	1470	3600	35.7	75.0	121	340	57.0
m540-P132/L4	7.50	1470	3600	48.7	117	171	460	57.0
m540-P160/M4	11.0	1475	3600	71.2	157	228	830	73.0
m540-P160/L4	15.0	1475	3600	97.1	243	369	990	90.0
m540-P180/M4	18.5	1470	3600	120	301	397	1300	165
m540-P180/L4	22.0	1470	3600	143	329	472	1400	170
m540-P200/M4	30.0	1470	3600	195	507	604	2200	240
m540-P225/M4	37.0	1478	3600	239	598	646	4200	285
m540-P225/L4	45.0	1478	3600	291	757	786	4700	320
m540-P250/M4	55.0	1482	3600	354	885	1027	8500	420

Product									
	$U_{N,\Delta}$	$I_{N,\Delta}$	$U_{N,Y}$	$I_{N,Y}$	I_a/I_N	cos ϕ	$\eta_{50\,\%}$	$\eta_{75\,\%}$	$\eta_{100\,\%}$
	[V]	[A]	[V]	[A]			[%]	[%]	[%]
m540-P90/L4	230	5.50	400	3.15	7.2	0.80	84.9	83.5	82.8
m540-P100/M4	230	7.60	400	4.40	7.6	0.83	86.4	85.1	84.3
m540-P100/L4	230	10.2	400	5.90	7.3	0.83	88.2	86.4	85.5
m540-P112/M4	230	13.7	400	7.90	7.1	0.82	88.6	87.3	86.6
m540-P132/M4	230	18.2	400	10.5	7.2	0.84	89.5	88.4	87.7
m540-P132/L4	230	24.8	400	14.3	7.4	0.84	90.8	89.8	88.7
m540-P160/M4	230	35.5	400	20.5	6.8	0.84	91.4	91.0	89.8
m540-P160/L4	230	49.4	400	28.5	8.5	0.82	91.5	91.2	90.6
m540-P180/M4	230	60.5	400	35.0	7.2	0.82	92.9	92.0	91.2
m540-P180/L4	230	71.0	400	41.0	6.8	0.83	93.6	92.2	91.6
m540-P200/M4	230	95.5	400	55.0	7.3	0.84	93.7	92.9	92.3
m540-P225/M4	230	115	400	66.0	6.4	0.86	94.4	93.5	92.7
m540-P225/L4	230	139	400	80.0	6.4	0.86	95.1	93.8	93.1
m540-P250/M4	230	167	400	96.0	6.8	0.87	95.0	93.9	93.5

[1] Without accessories

Rated data for 87 Hz

4-pole motors

Product							
	P_N	n_N	n_{max}	M_N	M_{max}	J [1]	m [1]
	[kW]	[r/min]	[r/min]	[Nm]	[Nm]	[kgcm²]	[kg]
m540-P90/L4	2.60	2555	3600	9.91	35.5	49.0	15.0
m540-P100/M4	3.90	2575	3600	14.3	62.5	140	29.0
m540-P100/L4	5.20	2570	3600	19.6	75.9	140	29.0
m540-P112/M4	7.35	2570	3600	26.2	96.4	170	29.0
m540-P132/M4	9.60	2580	3600	35.7	130	340	57.0
m540-P132/L4	13.1	2575	3600	48.7	181	460	57.0
m540-P160/M4	19.2	2585	3600	71.2	226	830	73.0
m540-P160/L4	26.3	2585	3600	97.1	364	990	90.0
m540-P180/M4	32.2	2580	3600	120	392	1300	165
m540-P180/L4	38.5	2585	3600	143	468	1400	170
m540-P200/M4	52.5	2580	3600	195	604	2200	240
m540-P225/M4	64.8	2588	3600	239	645	4200	285
m540-P225/L4	78.7	2588	3600	291	786	4700	320
m540-P250/M4	87.0	2598	3600	354	1023	8500	420

Product						
	$U_{N,\Delta}$	$I_{N,\Delta}$	cos ϕ	$\eta_{50\,\%}$	$\eta_{75\,\%}$	$\eta_{100\,\%}$
	[V]	[A]		[%]	[%]	[%]
m540-P90/L4	400	5.80	0.76	87.0	88.0	88.0
m540-P100/M4	400	8.00	0.82	88.8	89.8	89.8
m540-P100/L4	400	10.7	0.82	88.7	89.7	89.7
m540-P112/M4	400	14.4	0.81	89.2	90.2	90.2
m540-P132/M4	400	19.6	0.81	91.0	92.0	92.0
m540-P132/L4	400	26.0	0.84	90.9	91.9	91.9
m540-P160/M4	400	36.6	0.82	91.3	92.3	92.3
m540-P160/L4	400	50.9	0.80	91.5	92.5	92.5
m540-P180/M4	400	62.3	0.79	92.1	93.6	93.6
m540-P180/L4	400	73.1	0.82	92.3	93.8	93.8
m540-P200/M4	400	98.4	0.83	92.8	94.3	94.3
m540-P225/M4	400	119	0.85	91.6	92.6	92.6
m540-P225/L4	400	143	0.86	91.9	93.4	93.4
m540-P250/M4	400	154	0.86	92.3	93.8	93.8

[1] Without accessories

Motor – inverter assignment

► Inverter Drives 8400 (E84AV)

Rated frequency 50/60 Hz

Rated power	Product	Product key
		Inverter
P_N		
[kW]		
1.50	m540-P90/L4	E84AV□□□1524□□0
2.20	m540-P100/M4	E84AV□□□2224□□0
3.00	m540-P100/L4	E84AV□□□3024□□0
4.00	m540-P112/M4	E84AV□□□4024□□0
5.50	m540-P132/M4	E84AV□□□5524□□0
7.50	m540-P132/L4	E84AV□□□7524□□0
11.0	m540-P160/M4	E84AV□□□1134□□0
15.0	m540-P160/L4	E84AV□□□1534□□0
18.5	m540-P180/M4	E84AV□□□1834□□0
22.0	m540-P180/L4	E84AV□□□2234□□0
30.0	m540-P200/M4	E84AV□□□3034□□0
37.0	m540-P225/M4	E84AV□□□3734□□0
45.0	m540-P225/L4	E84AV□□□4534□□0
55.0	m540-P250/M4	

Rated frequency 87 Hz

Rated power	Product	Product key
		Inverter
P_N		
[kW]		
2.60	m540-P90/L4	E84AV□□□3024□□0
3.90	m540-P100/M4	E84AV□□□4024□□0
5.20	m540-P100/L4	E84AV□□□5524□□0
7.35	m540-P112/M4	E84AV□□□7524□□0
9.60	m540-P132/M4	E84AV□□□1134□□0
13.1	m540-P132/L4	E84AV□□□1534□□0
19.2	m540-P160/M4	E84AV□□□2234□□0
26.3	m540-P160/L4	E84AV□□□3034□□0
32.2	m540-P180/M4	E84AV□□□3734□□0
38.5	m540-P180/L4	E84AV□□□4534□□0

Motor connection

The three-phase AC motors are designed for operation at a constant mains frequency and with an inverter.
For 50 Hz operation, the motors are operated in Δconfiguration at 230 V or in star configuration at 400 V.
For inverter operation, the base frequency has been specified as 87 Hz at a rated voltage of 400 V in Δconfiguration.

The standard connection is implemented via a terminal box. Furthermore HAN connectors are provided to quickly carry out commissioning or maintenance operations.

Overview of the connection options

Product	m540-P90/L4	m540-P100/M4 m540-P100/L4	m540-P112/M4	m540-P132/M4 m540-P132/L4
Power connection/brake connection				
Terminal box	●	●	●	●
HAN 10E connector	●	●	●	●
Feedback connection				
Terminal box	●	●	●	●
Directly at the encoder				
Blower connection				
Terminal box	●	●	●	●
Temperature sensor connection				
Terminal box	●	●	●	●

Product	m540-P160/M4 m540-P160/L4	m540-P180/M4 m540-P180/L4	m540-P200/M4	m540-P225/M4 m540-P225/L4	m540-P250/M4
Power connection/brake connection					
Terminal box	●	●	●	●	●
HAN 10E connector	●	●	●	●	●
Feedback connection					
Terminal box	●	●	●		
Directly at the encoder				●	●
Blower connection					
Terminal box	●	●	●	●	●
Temperature sensor connection					
Terminal box	●	●	●	●	●

Motor connection

Assignment: motor terminal box - built-on accessories

► Depending on the motor version, terminal boxes of different sizes (KK5 and KK6) and, if required, the terminal box (KK7) are used for connecting the feedback.

Product	m540-P90/L4	m540-P100/M4 m540-P100/L4	m540-P112/M4	m540-P132/M4 m540-P132/L4
Built-on accessories with 1 thermal sensor				
Without	KK5 HAN 10 E	KK5 HAN 10 E	KK5 HAN 10 E	KK5 HAN 10 E
Feedback	KK7	KK7	KK7	KK7
Brake	KK6	KK6	KK6	KK6
Brake + Feedback	KK7	KK7	KK7	KK7

Product	m540-P160/M4 m540-P160/L4	m540-P180/M4 m540-P180/L4	m540-P200/M4	m540-P225/M4 m540-P225/L4	m540-P250/M4
Built-on accessories with 1 thermal sensor					
Without	KK5 HAN 10 E	KK6 HAN 10 E	KK6 HAN 10 E	KK6 HAN 10 E	KK6 HAN 10 E
Feedback	KK7	KK7	KK7	KK7	KK7
Brake	KK6	KK6	KK6	KK6	KK6
Brake + Feedback	KK7	KK7	KK7	KK7	KK7

Motor connection

Position of cable entry/connector

For geared motors, the position of the cable entry must be selected as a function of the terminal box position.

Terminal box positions 2 ... 5

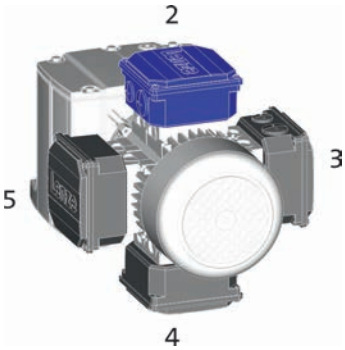

Cable entry positions 1 ... 5

Terminal box position	2	3	4	5
	Cable entry positions			
KK5	1/3/5*	1/2*/4	1/3*/5	1/2/4*
KK6	1/3/5*	1/2*/4	1/3*/5	1/2/4*
KK7	3+5	2+4	3+5	2+4
	Connector position			
HAN	1/3/5	1/2/4	1/3/5	1/2/4

- ► If preferred positions are not specified in the order, the cable entry will be positioned as indicated by * on the diagram below.
- ► If preferred positions are not specified in the order, the connector will be positioned as indicated by * on the diagram below.

Connection via terminal box

Dimensions of KK5

The connection in the terminal box is implemented by means of conventional cable glands.

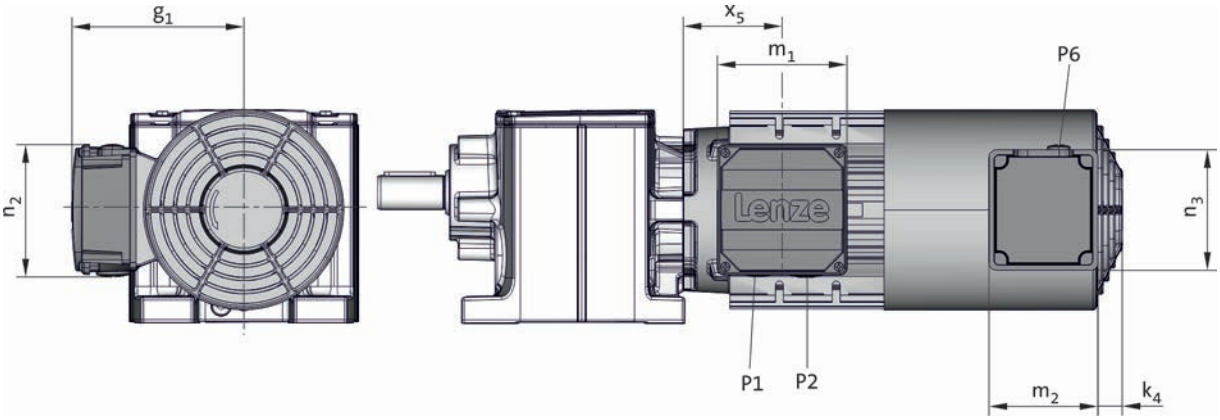

Product								
			m540	m540	m540	m540	m540	m540
			-P90/L4	-P100/M4 -P100/L4	-P112/M4	-P132/M4 -P132/L4	-P160/M4	-P160/L4
	g_1	[mm]	126	166	177	202	237	237
	m_1	[mm]	79.0	112	112	130	145	145
	n_2	[mm]	93.0	135	135	135	175	175
	P_1	[mm]	M20x1.5	M32x1.5	M32x1.5	M32x1.5	M40x1.5	M40x1.5
	P_2	[mm]	M25x1.5	M32x1.5	M32x1.5	M32x1.5	M40x1.5	M40x1.5
	k_4	[mm]	32	32	32	0	0	0
	m_2	[mm]	95	95	95	107	107	107
	n_3	[mm]	105	105	105	105	105	105
	P_6	[mm]	1x M16x1.5	1x M16x1.5	1x M16x1.5	1x M16x1.5	1x M16x1.5	1x M16x1.5

	x_5	x_5	x_5	x_5	x_5	x_5
	[mm]	[mm]	[mm]	[mm]	[mm]	[mm]
g500-H5000	205	227	219	273	257	317
g500-H8000		226	217	267	250	310
g500-H14000			205	254	237	297
g500-S8000		226	217	267	250	310
g500-S14000			205	254	237	297
g500-S19000			205	254	237	297
g500-B8000	205	227	219	273	257	317
g500-B13000		226	217	267	250	310
g500-B20000				154	237	297

Connection via terminal box

Dimensions of KK6

The connection in the terminal box is implemented by means of conventional cable glands.

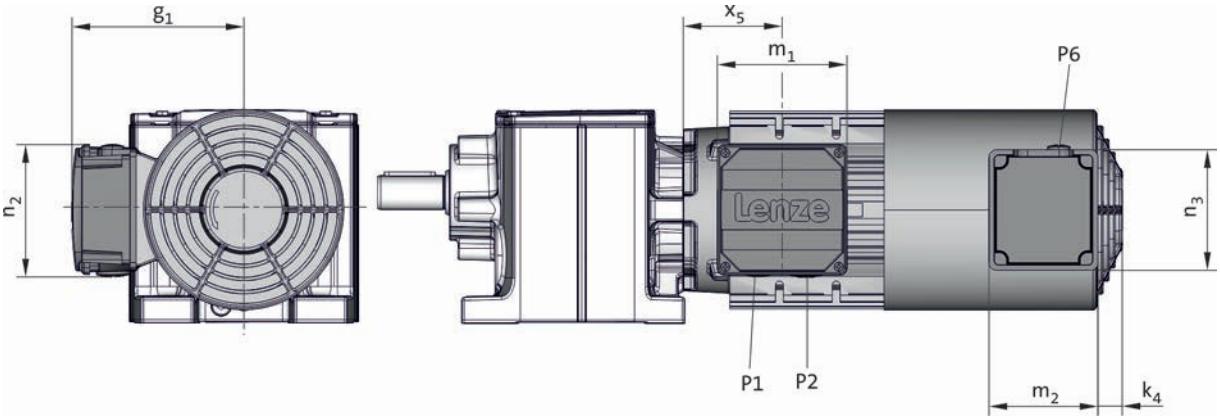

Product								
			m540	m540	m540	m540	m540	m540
			-P90/L4	-P100/M4 -P100/L4	-P112/M4	-P132/M4 -P132/L4	-P160/M4	-P160/L4
	g_1	[mm]	154	171	182	207	241	241
	m_1	[mm]	123	135	135	162	180	180
	n_2	[mm]	120	135	135	162	180	180
	P_1	[mm]	M20x1.5	M32x1.5	M32x1.5	M32x1.5	M40x1.5	M40x1.5
	P_2	[mm]	M25x1.5	M32x1.5	M32x1.5	M32x1.5	M40x1.5	M40x1.5
	k_4	[mm]	32	32	32	0	0	0
	m_2	[mm]	95	95	95	107	107	107
	n_3	[mm]	105	105	105	105	105	105
	P_6	[mm]	1x M16x1.5	1x M16x1.5	1x M16x1.5	1x M16x1.5	1x M16x1.5	1x M16x1.5

	x_5	x_5	x_5	x_5	x_5	x_5
	[mm]	[mm]	[mm]	[mm]	[mm]	[mm]
g500-H5000	205	227	219	273	257	317
g500-H8000		226	217	267	250	310
g500-H14000			205	254	237	297
g500-S8000		226	217	267	250	310
g500-S14000			205	254	237	297
g500-S19000			205	254	237	297
g500-B8000	205	227	219	273	257	317
g500-B13000		226	217	267	250	310
g500-B20000				154	237	297

Connection via terminal box

Dimensions of KK6

The connection in the terminal box is implemented by means of conventional cable glands.

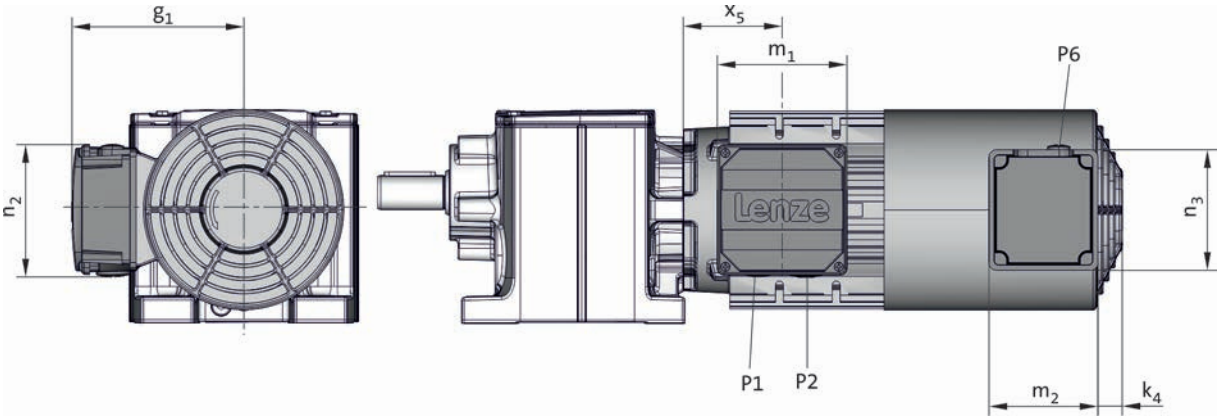

Product								
			m540	m540	m540	m540	m540	m540
			-P180/M4	-P180/L4	-P200/M4	-P225/M4	-P225/L4	-P250/M4
	g_1	[mm]	292	292	315	408	408	457
	m_1	[mm]	197	197	197	233	233	299
	n_2	[mm]	265	265	266	319	319	374
	P_1	[mm]	M40x1.5	M40x1.5	M50x1.5	M63x1.5	M50x1.5	M63x1.5
	P_2	[mm]	M40x1.5	M40x1.5	M50x1.5	M63x1.5	M50x1.5	M63x1.5
	k_4	[mm]	0	0	0	0	0	0
	m_2	[mm]	107	107	107	107	107	107
	n_3	[mm]	105	105	105	105	105	105
	P_6	[mm]	1x M16x1.5	1x M16x1.5	1x M16x1.5	1x M16x1.5	1x M16x1.5	1x M16x1.5

	x_5	x_5	x_5	x_5	x_5	x_5
	[mm]	[mm]	[mm]	[mm]	[mm]	[mm]
g500-H5000	316	346	406	415	475	
g500-H8000	310	340	399	405	463	481
g500-H14000	296	326	386	388	448	463
g500-S8000	310	340	399	403	463	
g500-S14000	296	326	386	388	448	463
g500-S19000	296	326	386	388	488	463
g500-B8000	316	346	399	415	475	488
g500-B13000	310	340	386	403	463	481
g500-B20000	296	326	386	388	448	

Connection via terminal box

Dimensions of KK7

The connection in the terminal box is implemented by means of conventional cable glands.

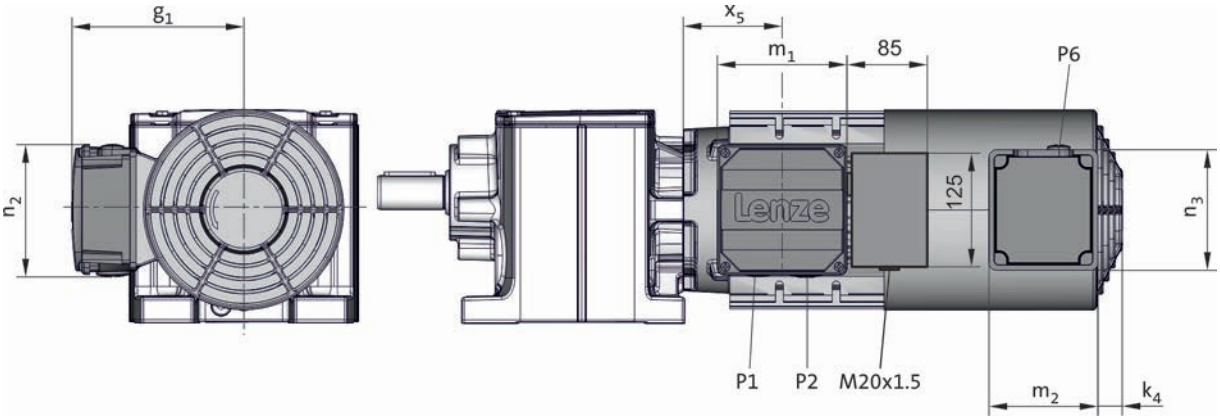

Product								
			m540	m540	m540	m540	m540	m540
			-P90/L4	-P100/M4 -P100/L4	-P112/M4	-P132/M4 -P132/L4	-P160/M4	-P160/L4
	g_1	[mm]	154	171	182	207	241	241
	m_1	[mm]	123	135	135	162	180	180
	n_2	[mm]	120	135	135	162	180	180
	P_1	[mm]	M20x1.5	M32x1.5	M32x1.5	M32x1.5	M40x1.5	M40x1.5
	P_2	[mm]	M25x1.5	M32x1.5	M32x1.5	M32x1.5	M40x1.5	M40x1.5
	k_4	[mm]	32	32	32	0	0	0
	m_2	[mm]	95	95	95	107	107	107
	n_3	[mm]	105	105	105	105	105	105
	P_6	[mm]	1x M16x1.5	1x M16x1.5	1x M16x1.5	1x M16x1.5	1x M16x1.5	1x M16x1.5

	x_5	x_5	x_5	x_5	x_5	x_5
	[mm]	[mm]	[mm]	[mm]	[mm]	[mm]
g500-H5000	205	227	219	273	257	317
g500-H8000		226	217	267	250	310
g500-H14000			205	254	237	297
g500-S8000		226	217	267	250	310
g500-S14000			205	254	237	297
g500-S19000			205	254	237	297
g500-B8000	205	227	219	273	257	317
g500-B13000		226	217	267	250	310
g500-B20000				154	237	297

Connection via terminal box

Dimensions of KK7

The connection in the terminal box is implemented by means of conventional cable glands.

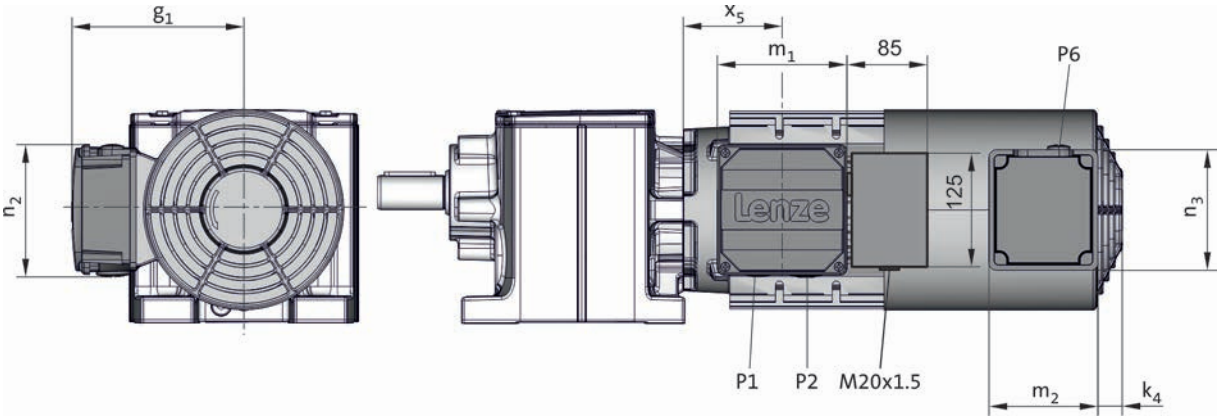

Product								
			m540	m540	m540	m540	m540	m540
			-P180/M4	-P180/L4	-P200/M4	-P225/M4	-P225/L4	-P250/M4
	g_1	[mm]	292	292	315	408	408	457
	m_1	[mm]	197	197	197	233	233	299
	n_2	[mm]	265	265	266	319	319	374
	P_1	[mm]	M40x1.5	M40x1.5	M50x1.5	M63x1.5	M50x1.5	M63x1.5
	P_2	[mm]	M40x1.5	M40x1.5	M50x1.5	M63x1.5	M50x1.5	M63x1.5
	k_4	[mm]	0	0	0	0	0	0
	m_2	[mm]	107	107	107	107	107	107
	n_3	[mm]	105	105	105	105	105	105
	P_6	[mm]	1x M16x1.5	1x M16x1.5	1x M16x1.5	1x M16x1.5	1x M16x1.5	1x M16x1.5

	x_5	x_5	x_5	x_5	x_5	x_5
	[mm]	[mm]	[mm]	[mm]	[mm]	[mm]
g500-H5000	316	346	406	415	475	
g500-H8000	310	340	399	405	463	481
g500-H14000	296	326	386	388	448	463
g500-S8000	310	340	399	403	463	
g500-S14000	296	326	386	388	448	463
g500-S19000	296	326	386	388	488	463
g500-B8000	316	346	399	415	475	488
g500-B13000	310	340	386	403	463	481
g500-B20000	296	326	386	388	448	

Connections via HAN connectors

HAN 10 E

In the case of the rectangular HAN 10E connectors, all six ends of the three winding phases are taken out to the power contacts. The motor circuit is therefore determined in the mating connector.

Pin assignment		
Contact	Meaning	
1	Terminal board: U1	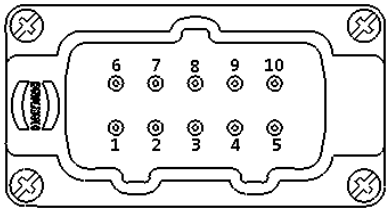
2	Terminal board: V1	
3	Terminal board: W1	
4	Brake +/AC	
5	Brake -/AC	
6	Terminal board: W2	
7	Terminal board: U2	
8	Terminal board: V2	
9	Thermal sensor: +KTY/PTC/TKO	
10	Thermal sensor: KTY/PTC/TKO	

Connections via HAN connectors

Dimensions

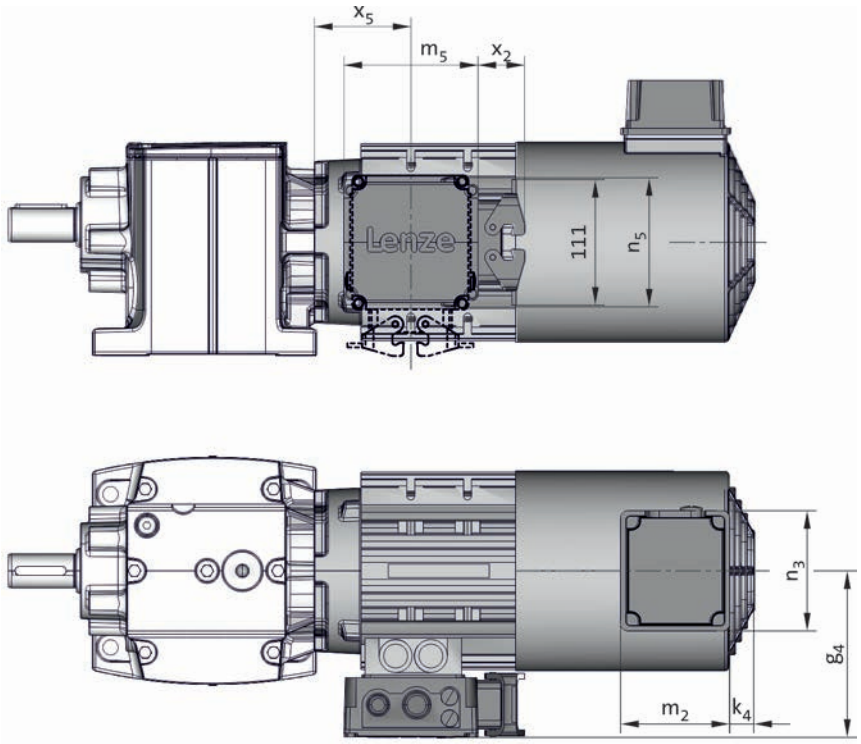

Product						
			m540	m540	m540	m540
			-P90/L4	-P100/M4	-P100/L4	-P112/M4
Dimensions						
	g_4	[mm]	154	171	171	182
	x_2	[mm]	46	46	46	46
	m_5	[mm]	123	135	135	135
	n_5	[mm]	120	135	135	135
	k_4	[mm]	32	32	32	32
	g_3	[mm]	126	166	166	166
	m_2	[mm]	95	95	95	95
	n_3	[mm]	105	105	105	105

	x_5	x_5	x_5	x_5
	[mm]	[mm]	[mm]	[mm]
g500-H5000	205	227	227	219
g500-H8000		226	226	217
g500-H14000				205
g500-S8000		226	226	217
g500-S14000				205
g500-S19000				205
g500-B8000	205	227	227	219
g500-B13000		226	226	217

Spring-applied brake

The three-phase AC motors can be equipped with a spring-applied brake which is active when the supply voltage has been switched off (closed-circuit principle). In the deenergised state, the brake is applied. This prevents possible movement of the motor shaft with regard to the load after switch-off or in the event of a power failure.
For optimum adaptation of the brake motor to the application, several brake sizes and control variants are provided for each motor.

Types

- **Standard**
  - 1 x 10^6 repeating switching cycles
  - 1 x 10^6 reversing switching cycles

Braking torques

In addition to the standard braking torque, depending on the brake size, the possibility of choosing between a reduced and an increased braking torque is provided.

- When the braking torque is reduced, great wear reserves can be attained. This is enabled by a reduction of the spring rate.
- In order to obtain a greater braking torque, the spring rate is increased. This is practical, for instance, for hoists, since here the gravity acts as an additional acceleration in the negative direction.

Manual release

By using the manual release lever, the brake can be released manually in deenergised operating state. The manual release makes positioning and maintenance work easier.

Spring-applied brake

Direct connection without rectifier

If the brake is activated directly without a rectifier, a freewheeling diode or a spark suppressor is required for protection against induction peaks.

- Supply voltages
  DC 24 V

Connection via mains voltage with brake rectifier

If the brake is not directly supplied with DC voltage, a rectifier is required. This is included in the scope of supply and is located in the terminal box of the motor. The rectifier converts the AC voltage of the connection into DC voltage. The following rectifiers are available:

Rectifier, 6-pole

- Approval UL / CSA
- Supply voltages
  AC 230 V
  AC 400 V
  AC 460 V

Spring-applied brake

Assignment of 4-pole motors and brakes

Design	Standard		LongLife	
Product	**Size**	**Rated torque**	**Size**	**Rated torque**
	Brake		Brake	
		M_k		M_k
		[Nm]		[Nm]
m540-P90/L4	08E	4.00		
	08E	8.00		
	10E	8.00		
	10E	16.0		
	10E	20.0		
	12E	14.0		
	12E	32.0		
m540-P100/M4 m540-P100/L4	10E	8.00		
	10E	16.0		
	10E	20.0		
	12E	14.0		
	12E	32.0		
	12E	40.0		
	14E	38.0		
m540-P112/M4	10E	20.0		
	12E	14.0		
	12E	32.0		
	12E	40.0		
	14E	38.0		
	14E	60.0		
m540-P132/M4 m540-P132/L4	16E	63.0		
	16E	80.0		
	16E	100		
	18E	80.0		
	18E	150		
m540-P160/M4 m540-P160/L4	18E	80.0		
	18E	150		
	20E	145		
	20E	260		
m540-P180/M4 m540-P180/L4	20E	145		
	20E	260		
	20E	315		
m540-P200/M4	20E	145		
	20E	260		
	20E	315		
	25E	265		
	25E	400		
m540-P225/M4 m540-P225/L4	20E	145		
	20E	260		
	20E	315		
	25E	265		
	25E	400		
	30E	300		
	30E	400		
	30E	650		
m540-P250/M4	30E	300		
	30E	400		
	30E	650		
	40E	650		
	40E	750		
	40E	850		

Spring-applied brake

Rated data with reduced braking torque

- ► In case of the braking torque and the maximum switching energy, the unit for the values (100 ... 3600) is rpm.
- ► Please enquire for braking torques and maximum switching work values not listed here.

Size			08E	10E	12E	14E	16E	18E	20E	25E	30E	40E
Power input												
	P_{in}	[kW]	0.025	0.030	0.040	0.050	0.055	0.085	0.10	0.11	0.22	0.14
Braking torque												
100	M_B	[Nm]	4.00	8.00	14.0	38.0	63.0	80.0	145	265	300	650
1000	M_B	[Nm]	3.60	7.00	11.9	31.9	51.7	64.0	115	201	231	481
1200	M_B	[Nm]	3.50	6.80	11.6	31.2	50.4	62.4	112	196	225	468
1500	M_B	[Nm]	3.40	6.60	11.3	30.4	49.8	61.6	109	194	219	455
1800	M_B	[Nm]	3.30	6.50	11.1	29.6	47.9	59.2			213	442
3000	M_B	[Nm]	3.00	6.10	10.4	27.7	45.4				198	410
3600	M_B	[Nm]	3.00	5.90	10.1							
Maximum switching energy												
100	Q_E	[KJ]	7.50	12.0	24.0	30.0	36.0	60.0	80.0	120	150	200
1000	Q_E	[KJ]	7.50	12.0	24.0	30.0	36.0	60.0	80.0	120	150	200
1200	Q_E	[KJ]	7.50	12.0	24.0	30.0	36.0	60.0	80.0	120	150	200
1500	Q_E	[KJ]	7.50	12.0	24.0	30.0	36.0	60.0	24.0 [1]	36.0 [1]	150	200
1800	Q_E	[KJ]	7.50	12.0	24.0	30.0	36.0	36.0 [1]			150	200
3000	Q_E	[KJ]	7.50	12.0	24.0	18.0 [1]	11.0 [1]				150	200
3600	Q_E	[KJ]	7.50	12.0	7.00 [1]							
Transition operating frequency												
	$S_{hü}$	[1/h]	50.0	40.0	30.0	28.0	27.0	20.0	19.0	15.0	10.0	12.0
Moment of inertia												
	J	[kgcm²]	0.61	2.00	4.50	6.30	15.0	29.0	73.0	200	195	445
Mass												
	m	[kg]	1.50	2.60	4.20	5.80	8.70	12.6	19.5	31.0	45.0	80.0

[1] In the region of the load limit the value for friction energy Q_{BW} can be reduced to 40 %.

Spring-applied brake

Rated data with reduced braking torque

► Activation via half-wave or bridge rectifier

Size			08E	10E	12E	14E	16E	18E	20E	25E	30E	40E
Friction energy												
	Q_{BW}	[MJ]	324	405	948	1276	2310	2295	4680	6480	3700	4000
Delay time												
Engaging	t_{11}	[ms]	30.0	22.0	27.0	24.0	34.0	20.0	72.0	155	120	160
Rise time												
Braking torque	t_{12}	[ms]	20.0	14.0	19.0	36.0	38.0	20.0	108	120	130	160
Engagement time												
	t_1	[ms]	50.0	36.0	46.0	60.0	72.0	40.0	180	275	250	320
Disengagement time												
	t_2	[ms]	30.0	55.0	65.0	140	170	180	230	260	180	400

► The brake response and application times are guide values. The engagement time is 10 times longer with AC-side switching. With the maximum air gap the disengagement time t_2 – depending on the brake and control – is up to 4 times longer than the disengagement time with the rated air gap.

Spring-applied brake

Rated data with standard braking torque

- ► In case of the braking torque and the maximum switching energy, the unit for the values (100 ... 3600) is rpm.
- ► Please enquire for braking torques and maximum switching work values not listed here.

Size			08E	10E	12E	14E	16E	18E	20E	25E	30E	40E
Power input												
	P_{in}	[kW]	0.025	0.030	0.040	0.050	0.055	0.085	0.10	0.11	0.14	0.14
Braking torque												
100	M_B	[Nm]	8.00	16.0	32.0	60.0	80.0	150	260	400	400	750
1000	M_B	[Nm]	7.20	14.0	27.0	51.0	66.0	121	206	307	308	555
1200	M_B	[Nm]	7.00	14.0	27.0	50.0	65.0	118	201	300	300	540
1500	M_B	[Nm]	6.80	13.0	26.0	48.0	63.0	115	195	291	292	525
1800	M_B	[Nm]	6.70	13.0	26.0	47.0	61.0	112			284	510
3000	M_B	[Nm]	6.30	12.0	24.0	44.0	57.0				264	473
3600	M_B	[Nm]	6.10	12.0	23.0							
Maximum switching energy												
100	Q_E	[KJ]	7.50	12.0	24.0	30.0	36.0	60.0	80.0	120	150	200
1000	Q_E	[KJ]	7.50	12.0	24.0	30.0	36.0	60.0	80.0	120	150	200
1200	Q_E	[KJ]	7.50	12.0	24.0	30.0	36.0	60.0	80.0	120	150	200
1500	Q_E	[KJ]	7.50	12.0	24.0	30.0	36.0	60.0	24.0 [1)]	36.0 [1)]	150	200
1800	Q_E	[KJ]	7.50	12.0	24.0	30.0	36.0	36.0 [1)]			150	200
3000	Q_E	[KJ]	7.50	12.0	24.0	18.0 [1)]	11.0 [1)]				150	200
3600	Q_E	[KJ]	7.50	12.0	7.00 [1)]							
Transition operating frequency												
	$S_{hü}$	[1/h]	50.0	40.0	30.0	28.0	27.0	20.0	19.0	15.0	10.0	12.0
Moment of inertia												
	J	[kgcm²]	0.61	2.00	4.50	6.30	15.0	29.0	73.0	200	195	445
Mass												
	m	[kg]	1.50	2.60	4.20	5.80	8.70	12.6	12.6	31.0	45.0	80.0

[1)] In the region of the load limit the value for friction energy Q_{BW} can be reduced to 40 %.

Spring-applied brake

Rated data with standard braking torque

► Activation via half-wave or bridge rectifier

Size			08E	10E	12E	14E	16E	18E	20E	25E	30E	40E
Friction energy												
	Q_{BW}	[MJ]	158	264	530	571	966	1542	2322	3522	3700	4000
Delay time												
Engaging	t_{11}	[ms]	15.0	28.0		17.0	27.0	33.0	65.0	110	105	190
Rise time												
Braking torque	t_{12}	[ms]	16.0	19.0	25.0		30.0	45.0	100	120	130	160
Engagement time												
	t_1	[ms]	31.0	47.0	53.0	42.0	57.0	78.0	165	230	235	350
Disengagement time												
	t_2	[ms]	57.0	76.0	115	210	220	270	340	390	200	350

► The brake response and application times are guide values. The engagement time is 10 times longer with AC-side switching. With the maximum air gap the disengagement time t_2 – depending on the brake and control – is up to 4 times longer than the disengagement time with the rated air gap.

Spring-applied brake

Rated data with increased braking torque

- ► In case of the braking torque and the maximum switching energy, the unit for the values (100 ... 3600) is rpm.
- ► Please enquire for braking torques and maximum switching work values not listed here.

Size			10E	12E	16E	20E	25E	30E	40E
Power input									
	P_{in}	[kW]	0.030	0.040	0.055	0.10	0.11	0.14	0.14
Braking torque									
100	M_B	[Nm]	20.0	40.0	100	315	600	650	850
1000	M_B	[Nm]	17.4	34.0	82.0	249	456	501	629
1200	M_B	[Nm]	17.0	33.2	80.0	243	444	488	612
1500	M_B	[Nm]	16.6	32.4	79.0	236	438	475	595
1800	M_B	[Nm]	16.2	31.6	76.0			462	578
3000	M_B	[Nm]	15.2	29.6	72.0			429	536
3600	M_B	[Nm]	14.8	28.8					
Maximum switching energy									
100	Q_E	[KJ]	12.0	24.0	36.0	80.0	120	150	200
1000	Q_E	[KJ]	12.0	24.0	36.0	80.0	120	150	200
1200	Q_E	[KJ]	12.0	24.0	36.0	80.0	120	150	200
1500	Q_E	[KJ]	12.0	24.0	36.0	24.0 [1)]	36.0 [1)]	150	200
1800	Q_E	[KJ]	12.0	24.0	36.0			150	200
3000	Q_E	[KJ]	12.0	24.0	11.0 [1)]			150	200
3600	Q_E	[KJ]	12.0	7.00 [1)]					
Transition operating frequency									
	$S_{hü}$	[1/h]	40.0	30.0	27.0	20.0	19.0	10.0	12.0
Moment of inertia									
	J	[kgcm²]	2.00	4.50	15.0	29.0	73.0	195	445
Mass									
	m	[kg]	2.60	4.20	8.70	12.6	31.0	45.0	80.0

[1)] In the region of the load limit the value for friction energy Q_{BW} can be reduced to 40 %.

Spring-applied brake

Rated data with increased braking torque

► Activation via half-wave or bridge rectifier

Size			10E	12E	16E	20E	25E	30E	40E
Friction energy									
	Q_{BW}	[MJ]	396	948	2310	3489	6480	3700	4000
Delay time									
Engaging	t_{11}	[ms]	23.0	24.0		60.0	155	70.0	190
Rise time									
Braking torque	t_{12}	[ms]	15.0	21.0	25.0	90.0	120	130	160
Engagement time									
	t_1	[ms]	38.0	45.0	49.0	150	275	200	350
Disengagement time									
	t_2	[ms]	93.0	140	280	410	260	250	350

► The brake response and application times are guide values. The engagement time is 10 times longer with AC-side switching. With the maximum air gap the disengagement time t_2 – depending on the brake and control – is up to 4 times longer than the disengagement time with the rated air gap.

Spring-applied brake

Permissible friction energy

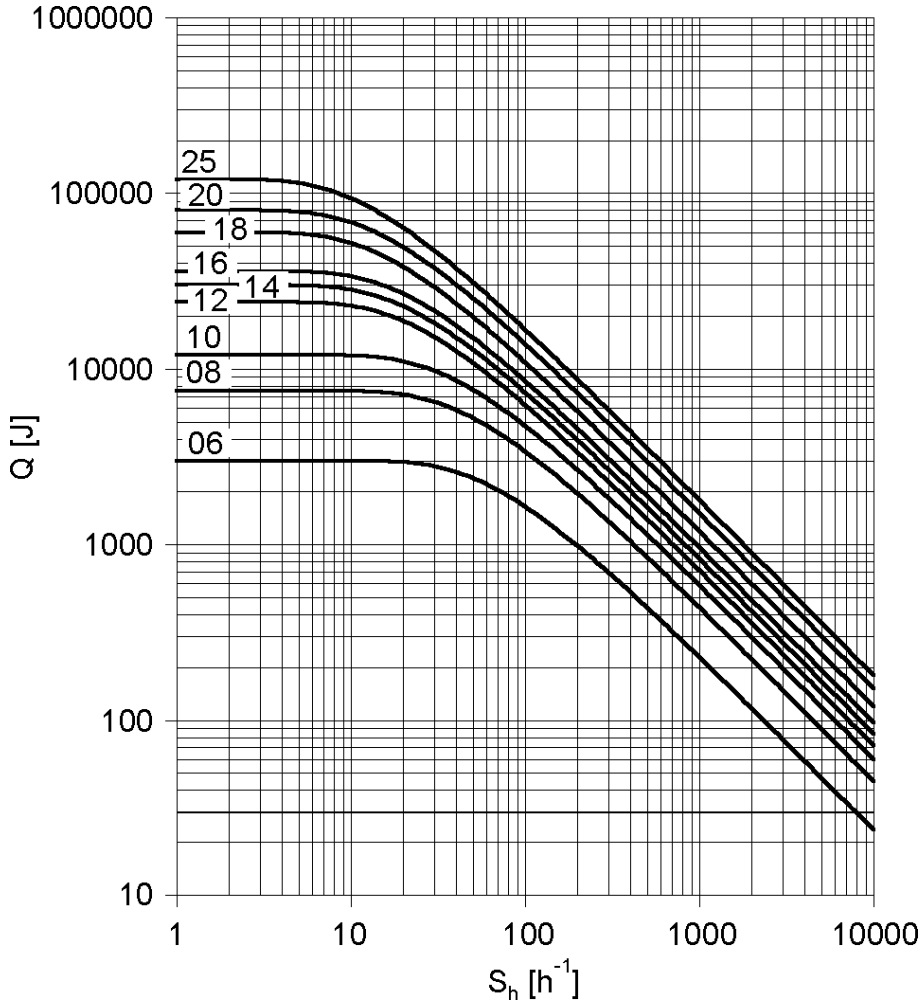

Q =Switching energy per switching cycle
S_h =Operating frequency
Brake size = 06 to 25

Spring-applied brake

Manual release

By using the manual release lever, the brake can be released manually in deenergised operating state. The manual release makes positioning and maintenance work easier.

The following combinations with manual release lever and motor connection in the same position are not possible:
- HAN connector with connection in position 1

Manual release lever

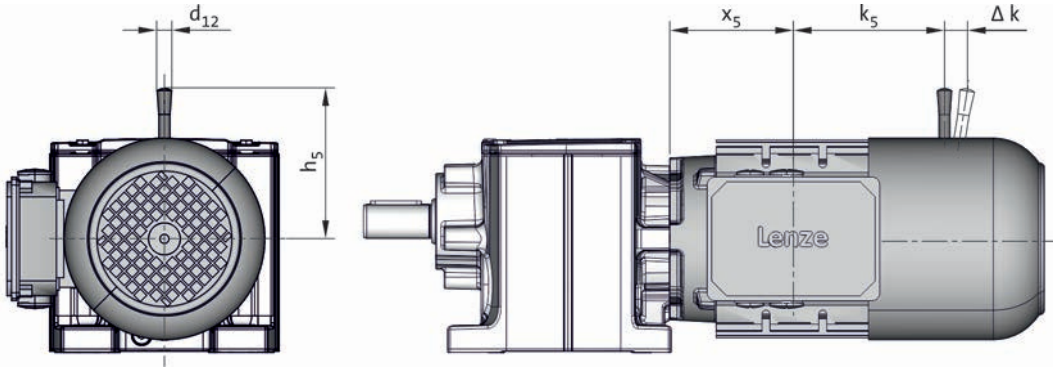

Product	Size	Dimensions			
	Brake				
		k_5	Δ k	h_5	d_{12}
		[mm]	[mm]	[mm]	[mm]
m540-P90/L4	08E 10E 12E	103 114 116	27 28 37	116 132 161	13.0 13.0 13.0
m540-P100/M4 m540-P100/L4	10E 12E	127 129 133	28 37	132 161	13.0 13.0
m540-P112/M4	12E 14E	129 133	37 41	161 195	13.0 24.0
m540-P132/M4 m540-P132/L4	16E 18E	158 171	55 59	240 279	24.0 24.0
m540-P160/M4 m540-P160/L4	18E 20E	204 211	59 74	279 319	24.0 24.0

Product	m540					
	-P90/L4	-P100/M4 -P100/L4	-P112/M4	-P132/M4 -P132/L4	-P160/M4	-P160/L4
	x_5	x_5	x_5	x_5	x_5	x_5
	[mm]	[mm]	[mm]	[mm]	[mm]	[mm]
g500-H5000	205	227	219	273	257	317
g500-H8000		226	217	267	250	310
g500-H14000			205	254	237	297
g500-S8000		226	217	267	250	310
g500-S14000			205	254	237	297
g500-S19000			205	254	237	297
g500-B8000	205	227	219	273	257	317
g500-B13000		226	217	267	250	310
g500-B20000				154	237	297

Spring-applied brake

Manual release

Manual release lever

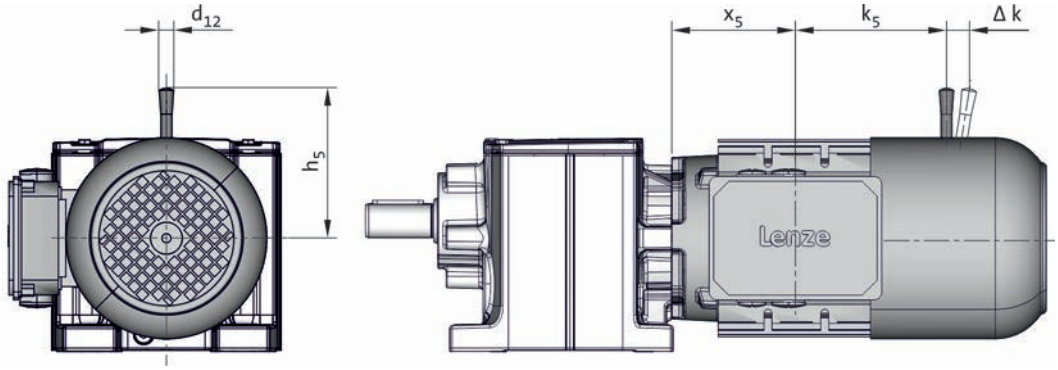

Product	Size	Dimensions			
	Brake				
		k_5	Δ k	h_5	d_{12}
		[mm]	[mm]	[mm]	[mm]
m540-P180/M4 m540-P180/L4	20E	199	74	319	24.0
m540-P200/M4	20E 25E	208 218	74 103	319 445	24.0 24.0
m540-P225/M4 m540-P225/L4	25E 30E	269 270	103 69	445 330	24.0 24.0
m540-P250/M4	30E 40E	273 273	69 65	330 377	24.0 24.0

Product	m540					
	-P180/M4	-P180/L4	-P200/M4	-P225/M4	-P225/L4	-P250/M4
	x_5	x_5	x_5	x_5	x_5	x_5
	[mm]	[mm]	[mm]	[mm]	[mm]	[mm]
g500-H5000	316	346	406	415	475	
g500-H8000	310	340	399	405	463	481
g500-H14000	296	326	386	388	448	463
g500-S8000	310	340	399	403	463	
g500-S14000	296	326	386	388	448	463
g500-S19000	296	326	386	388	488	463
g500-B8000	316	346	399	415	475	488
g500-B13000	310	340	386	403	463	481
g500-B20000	296	326	386	388	448	

Feedback

Incremental encoder and SinCos absolute value encoder

Incremental encoders can only be used for speed measurement, but not for speed control. Homing is required in order to enable positioning later.

Absolute value encoders can detect the speed, the rotor position, and the machine position with a very high resolution. They are used for the positioning of dynamic applications and do not require homing.

► The three-phase AC motors with incremental encoders or SinCos absolute value encoders cannot be used for speed-dependent safety functions in connection with the SM 301 safety module.

Encoder type			HTL incremental		
Product key			IG512-24V-H [1]	IG1024-24V-H	IG2048-24V-H [1]
Pulses			512	1024	2048
Output signals			HTL		
Interfaces			A, B, N track and inverted		
Absolute revolutions			0		
Accuracy		[′]	-2 ... 2		
Min. input voltage DC	$U_{in,min}$	[V]	8.00		
Max. input voltage DC	$U_{in,max}$	[V]	30.0		
Max. current consumption	I_{max}	[A]	0.15		
Limit frequency	f_{max}	[kHz]	160		

[1] IG512 and IG2048 are not available for the motors m540-P225 ... P250.

Blower

During operation with the rated torque at low speeds (< 20 Hz), the integral fan does not rotate fast enough anymore to ensure sufficient cooling of the motor. In order to prevent overheating, operation without a blower requires a torque reduction of the motor.
The blower cools the motor steadily and irrespective of the motor speed. A torque reduction is not required and the motor can be actuated with its rated torque from 5 Hz to the rated frequency.

Rated data for 50 Hz

Product	Number of phases	Connection method					
			U_{min}	U_{max}	P_{max}	I_{max}	m
			[V]	[V]	[kW]	[A]	[kg]
m540-P90/L4	1		230	277	0.065	0.29	1.90
	3	Δ	200	303	0.091	0.38	
		Y	346	525		0.22	
m540-P100/M4 m540-P100/L4	1		230	277	0.075	0.30	2.05
	3	Δ	200	303	0.091	0.37	
		Y	346	525		0.22	
m540-P112/M4	1		230	277	0.094	0.37	2.15
	3	Δ	200	303	0.10	0.35	
		Y	346	525		0.20	
m540-P132/M4 m540-P132/L4	1		230	277	0.15	0.57	3.00
	3	Δ	200	303		0.58	
		Y	346	525		0.33	
m540-P160/M4 m540-P160/L4	1		230	277	0.25	0.97	4.20
	3	Δ	200	303	0.36	0.93	
		Y	346	525		0.56	
m540-P180/M4 m540-P180/L4	1		230	277	0.23	0.93	8.15
	3	Δ	220	290	0.22	0.71	
		Y	380	500		0.40	
m540-P200/M4	1		230	277	0.23	0.93	9.75
	3	Δ	220	290	0.22	0.85	
		Y	380	500		0.51	
m540-P225/M4 m540-P225/L4		Δ	220	240	0.45	2.00	22.0
		Y	380	420		1.15	
m540-P250/M4		Δ	220	240		2.00	
		Y	380	420		1.15	

Blower

Dimensions, 4-pole motors

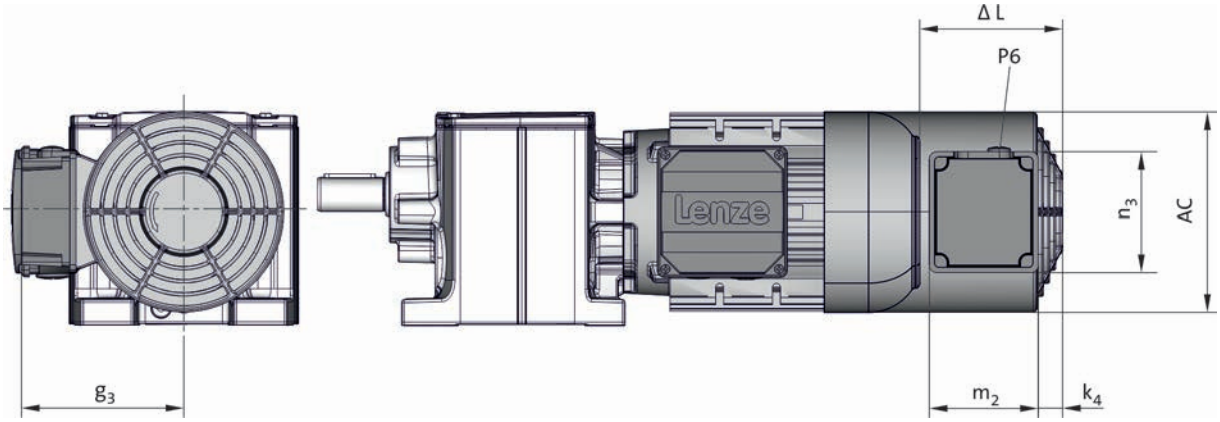

Built-on accessories					
	Without	Brake	Brake + Feedback	Feedback	

Product	Dimensions				
	Δ L	Δ L	Δ L	Δ L	AC
	[mm]	[mm]	[mm]	[mm]	[mm]
m540-P90/L4	213	213	213	213	174
m540-P100/M4 m540-P100/L4	219	219	219	219	198
m540-P112/M4	206	206	206	206	222
m540-P132/M4 m540-P132/L4	259	259	259	259	264
m540-P160/M4 m540-P160/L4	285	285	285	285	318
m540-P180/M4 m540-P180/L4	274	274	274	274	353

Product	Dimensions				
	k_4	g_3	m_2	n_3	P_6
	[mm]	[mm]	[mm]	[mm]	[mm]
m540-P90/L4	32	126	95	105	1x M16x1.5
m540-P100/M4 m540-P100/L4		166			
m540-P112/M4					
m540-P132/M4 m540-P132/L4	0	202	107		
m540-P160/M4 m540-P160/L4		237			
m540-P180/M4 m540-P180/L4		292			

Blower

Dimensions, 4-pole motors

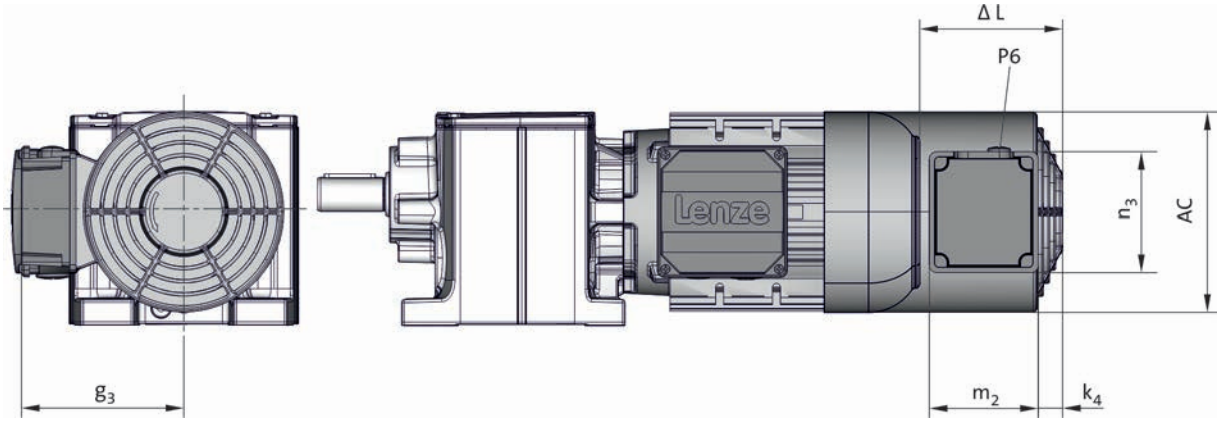

Built-on accessories					
	Without	Brake	Brake + Feedback	Feedback	

Product	Dimensions				
	Δ L	Δ L	Δ L	Δ L	AC
	[mm]	[mm]	[mm]	[mm]	[mm]
m540-P200/M4	293	293	293	293	393
m540-P225/M4 m540-P225/L4	787	787	787	787	439
m540-P250/M4	827	827	827	827	487

Product	Dimensions				
	k_4	g_3	m_2	n_3	P_6
	[mm]	[mm]	[mm]	[mm]	[mm]
m540-P200/M4	0	315	107	105	1x M16x1.5
m540-P225/M4 m540-P225/L4		337			
m540-P250/M4		408			

Temperature monitoring

PTC thermistor

The PTC thermistor is actuated in connection with a tripping unit. If the motor gets too hot, the motor can be switched off by means of a contactor. In contrast to the thermal contact, quick restart is possible.

m540-P90

Function	Operating temperature	Rated resistance			Standard
		155 °C	-20 °C	140 °C	
	T	R_N	R_N	R_N	
	-5 ... 5				
	[°C]	[Ω]	[Ω]	[Ω]	
Sudden change in resistance	155	1330	100	550	

m540-P100...P250

Function	Operating temperature	Rated resistance			Standard
		155 °C	-20 °C	140 °C	
	T	R_N	R_N	R_N	
	-5 ... 5				
	[°C]	[Ω]	[Ω]	[Ω]	
Sudden change in resistance	155	3990	300	1650	

13533946

Lenze SE
Hans-Lenze-Straße 1
D-31855 Aerzen
Phone: +49 (0)5154 82-0
Telefax: +49 (0)5154 82 28 00

www.Lenze.com